1968

ASME BOILER AND PRESSURE VESSEL COD

Section

I POWER BOILERS

II MATERIAL SPECIFICATIONS:
PART A — FERROUS
PART B — NONFERROUS

III NUCLEAR VESSELS

IV HEATING BOILERS

VII RECOMMENDED RULES FOR CARE OF POWER BOILERS

VIII PRESSURE VESSELS — DIVISION 1

IX WELDING QUALIFICATIONS

1968

Section VIII

ASME BOILER AND PRESSURE VESSEL CODE

PRESSURE VESSELS

DIVISION 1

ASME BOILER AND PRESSURE VESSEL CODE SECTION VIII

Rules for Construction of

PRESSURE VESSELS

DIVISION 1

1968 EDITION

REPORT OF SUBCOMMITTEE OF BOILER AND PRESSURE VESSEL COMMITTEE

THE AMERICAN SOCIETY OF MECHANICAL ENGINEERS
UNITED ENGINEERING CENTER
345 EAST FORTY-SEVENTH STREET, NEW YORK, N.Y. 10017

1968 ASME Boiler and Pressure Vessel Code

Section	Title
I	POWER BOILERS
II	MATERIAL SPECIFICATIONS
	Part A – Ferrous
	Part B – Nonferrous
III	NUCLEAR VESSELS
IV	LOW-PRESSURE HEATING BOILERS
VII	RECOMMENDED RULES FOR CARE OF POWER BOILERS
VIII	PRESSURE VESSELS – DIVISION 1
IX	WELDING QUALIFICATIONS

Case Interpretations

The Boiler and Pressure Vessel Committee meets regularly to consider requests for interpretations of the Code and to consider rulings for conditions encountered requiring special provisions. Those which have been adopted are published in a case interpretation booklet.

Interpretation and Addenda Service

Colored Sheet Addenda, which include additions to and revisions of all existing sections of the Code, and subsequent case interpretations in white loose leaf sheets may be obtained from the ASME Publication Sales Department at an annual subscription price.

Addenda Color Legend	
Pink	Summer 1968
Green	Winter 1968
Yellow	Summer 1969
Blue	Winter 1969
Orange	Summer 1970
Buff	Winter 1970

Copyright, © 1968, by
THE AMERICAN SOCIETY OF MECHANICAL ENGINEERS

All Rights Reserved

Library of Congress Catalog Card Number: 56-3934

Printed in the United States of America
Adopted by the Council of The American Society of Mechanical Engineers, 1925.
Revised 1927, 1930, 1931, 1932, 1934, 1935, 1937, 1940, 1943, 1946, 1949, 1950, 1952, 1956, 1959, 1962, 1965, 1968

Foreword

The American Society of Mechanical Engineers set up a committee in 1911 for the purpose of formulating standard rules for the construction of steam boilers and other pressure vessels. This committee is now called the Boiler and Pressure Vessel Committee.

The Committee's function is to establish rules of safety governing the design, the fabrication, and the inspection during construction of boilers and pressure vessels, and to interpret these rules when questions arise regarding their intent. In formulating the rules, the Committee considers the needs of users, manufacturers, and inspectors of pressure vessels.

The Boiler and Pressure Vessel Committee deals with the care and inspection of boilers and pressure vessels in service only to the extent of providing suggested rules of good practice as an aid to owners and their inspectors.

The rules established by the Committee are not to be interpreted as approving, recommending, or endorsing any proprietary or specific design or as limiting in any way the manufacturer's freedom to choose any method of design or any form of construction that conforms to the Code rules.

The Boiler and Pressure Vessel Committee meets regularly to consider requests for interpretations and revisions of the rules. Inquiries must be in writing and must give full particulars in order to receive consideration. Requests for interpretations which are of a routine nature may be executed by the Secretary of the Boiler and Pressure Vessel Committee without reference to a subcommittee. All other requests are first referred to the proper subcommittee for consideration and for recommendation of action by the Main Committee. The action of the Main Committee becomes effective only after confirmation by letter ballot of the Committee and approval by the Council of the Society.

Interpretations of general interest are published in *Mechanical Engineering* as Code Cases, and inquirers are advised of the action taken. Code revisions approved by the Committee are published in *Mechanical Engineering* as proposed addenda to the Code to invite comments from all interested persons. After final approval by the Committee and adoption by the ASME Council, they are printed in the addenda supplements to the Code.

Code Cases (interpretations) may be used in the construction of vessels to be stamped with the ASME Code symbol beginning with the date of their approval by the ASME Council.

After Code revisions are approved by council they may be used beginning with the date of issuance shown on the addenda. Revisions become mandatory as minimum requirements six months after such date of issuance, except for boilers or pressure vessels contracted for prior to the end of the six month period.

Manufacturers and users of pressure vessels are cautioned against making use of revisions and Cases that are less restrictive than former requirements without having assurance that they have been accepted by the proper authorities in the jurisdiction where the vessel is to be installed.

Each state and municipality in the United States and each province in the Dominion of Canada that adopts or accepts one or more Sections of the Boiler and Pressure Vessel Code is invited to appoint a representative to act on the Conference Committee to the Boiler and Pressure Vessel Committee. Since the members of the Conference Committee are in active contact with the administration and enforcement of the rules, the requirements for inspection in this Code correspond with those in effect in their respective jurisdictions. The required qualifications for an authorized inspector under these rules may be obtained from the administrative authority of any state, municipality, or province which has adopted these rules.

The Boiler and Pressure Vessel Committee in the formulation of its rules and in the establishment of maximum design and operating pressures considers materials, construction, method of fabrication, inspection, and safety devices.

Permission may be granted to regulatory bodies and organizations publishing safety standards to use a complete Section of the Code by reference. If usage of a Section, such as Section VIII, involves exceptions, omissions, or changes in provisions, the intent of the Code might not be attained.

Where a state or other regulatory body, in the printing of any Section of the ASME Boiler and Pressure Vessel Code, makes additions or omissions, it is recommended that such changes be clearly indicated.

The National Board of Boiler and Pressure Vessel Inspectors is composed of chief inspectors of states and municipalities in the United States and of provinces in the Dominion of Canada that have adopted the Boiler and Pressure Vessel Code. This Board, since its organization in 1919, has functioned to uniformly administer and enforce the rules of the Boiler and Pressure Vessel Code. The cooperation of that organization with the Boiler and Pressure Vessel Committee has been extremely helpful. Its function is clearly recognized and, as a result, inquiries received which bear on the administration or application of the rules are referred directly to the National Board. Such handling of this type of inquiry not only simplifies the work of the Boiler and Pressure Vessel Committee, but action on the problem for the inquirer is thereby expedited. Where an inquiry is not clearly an interpretation of the rules, nor a problem of application or administration, it may be considered both by the Boiler and Pressure Vessel Committee and the National Board.

It should be pointed out that the state or municipality where the Boiler and Pressure Vessel Code has been made effective has definite jurisdiction over any particular installation. Inquiries dealing with problems of local character should be directed to the proper authority of such state or municipality. Such authority may, if there is any question or doubt as to the proper interpretation, refer the question to the Boiler and Pressure Vessel Committee.

The specifications for materials given in Section II of the Code are identical with or similar to those of the American Society for Testing Materials as indicated, except in those cases where that organization has no corresponding specification.

Statement of Policy on Use of Code Symbols in Advertising

The American Society of Mechanical Engineers established a series of symbols, for the marking of boilers, pressure vessels, and certain appurtenances which have been constructed and inspected in compliance with the ASME Boiler and Pressure Vessel Code. It is the aim of the Society to maintain the standing of the Code Symbols for the benefit of the users, the enforcement jurisdictions, and the holders of the symbols who comply with all requirements. Based on that objective the following policy has been established on the usage in advertising of facsimiles of the symbols and reference to Code construction.

The American Society of Mechanical Engineers does not "approve," "certify," "rate" or "endorse" any product or construction and there shall be no statements or inferences which might so indicate. A manufacturer holding a Code Symbol and a Certificate of Authorization may state in advertising literature that its products "are built in accordance with the requirements of the ASME Boiler and Pressure Vessel Code," or "meet the requirements of the ASME Boiler and Pressure Vessel Code."

The ASME Symbol shall be used only for stamping and name plates as specifically provided in the Code. However, facsimiles may be used for the purpose of fostering the use of such construction. Such usage may be by an association or a society, or by a holder of a Code Symbol who may also use the facsimile in advertising to show that clearly specified products will carry the symbol. General usage is permitted only when *all* of a manufacturer's products are constructed under the Rules.

Members of Boiler and Pressure Vessel Committees

MAIN COMMITTEE

F. S. G. Williams, *Chairman*
J. M. Guy, *Vice Chairman*
J. D. Andrew, Jr.
A. M. Bain
J. U. Baley
E. E. Bucklin
H. M. Canavan
J. S. Clarke
W. E. Cooper
F. W. DeMoney
G. E. Fratcher
T. R. Hardin
W. L. Harding
W. B. Hoyt
J. W. James
E. M. Kloeblen
B. F. Langer
E. C. Miller
R. F. Miller
M. S. Nehls
E. O. Peterson
C. E. Rawlins
N. J. Rees
D. B. Wesstrom
L. P. Zick
J. D. Wilding, *Secretary*
M. R. Green, *Assistant Secretary*
S. W. Reynolds, *Assistant Secretary*

HONORARY MEMBERS

E. O. Bergman
P. R. Cassidy
F. W. Davis
A. J. Ely
W. P. Gerhart
J. H. Harlow
E. C. Korten
J. L. Menson
Walter Samans
J. W. Turner
C. W. Wheatley
E. J. Wiseman

EXECUTIVE COMMITTEE

J. M. Guy, *Chairman*
J. S. Clarke
T. R. Hardin
B. F. Langer
R. F. Miller
E. O. Peterson
D. B. Wesstrom
F. S. G. Williams
L. P. Zick
J. D. Wilding, *Secretary*

CONFERENCE COMMITTEE

C. W. Allison, Tennessee
D. R. Bartosch, Oregon
R. Beckwith, Michigan
W. A. Berriman, Quebec, Canada
J. E. Buckingham, Newfoundland, Canada
E. E. Bucklin, North Dakota
T. Caldwell, New York, N.Y.
T. C. Cannon, Tulsa, Okla.
F. J. Castro, Puerto Rico
R. T. Clark, Jr., Dist. of Columbia
A. G. Clarke, Los Angeles, Calif.
E. L. Clodfelter, North Carolina
W. A. Cooper, Tampa, Florida
J. T. Crosby, Arkansas
T. Dickson, Massachusetts
G. Langford, New York
R. L. Langille, Maine
F. W. Marcaccio, Rhode Island
J. R. Donlan, Connecticut
F. J. Drogosch, Detroit, Mich.
C. C. Edleman, Seattle, Washington
L. W. Eubank, West Virgina
D. R. Gallup, Illinois
W. Garvin, Manitoba, Canada
F. K. Goldsboro, Baltimore, Md.
J. F. Hanley, Chicago, Ill.
R. S. Johnson, Jr., Indiana
L. J. Hutchinson, Ontario, Canada
H. W. Jensen, Minnesota
G. M. Kuetemeyer, Milwaukee, Wis.
O. R. Kyle, Memphis, Tenn.
A. C. Lamb, Nevada
C. E. Shriver, Kansas
J. L. Sisk, New Brunswick, Canada

CONFERENCE COMMITTEE (CONT'D)

H. S. Mauk, Delaware
D. J. McDonald, Kentucky
P. S. Meseroll, Columbus, Ohio
R. D. Molt, Alaska
C. Nelson, Utah
R. Ostrem, Wisconsin
H. G. Parker, Texas
A. Parkhurst, Iowa
C. D. Pritchard, Mississippi
A. J. R. Rees, Alberta, Canada
J. Riddiough, Pennsylvania
A. Rona, Omaha, Nebr.
E. R. Shaw, Nebraska
S. Smith, British Columbia, Canada
G. V. Smyth, Nova Scotia, Canada
A. I. Snyder, California
J. L. Sullivan, New Jersey
J. Taylor, Saskatchewan, Canada
E. R. Turner, Honolulu Hawaii
L. J. Vivien, New Orleans, La.
H. W. Watts, Louisiana

MARINE CONFERENCE GROUP

R. J. Bosnak
V. W. Bugg
A. Cumyn
J. W. Heck, Jr.
F. P. Quarto

SUBCOMMITTEE ON POWER BOILERS (SCI)

J. M. Guy, *Chairman*
L. P. Gross, *Secretary*
J. Aguilar
J. D. Andrew, Jr.
G. B. Arnold
A. M. Bain
J. U. Baley
G. W. Bice
H. M. Canavan
J. W. Cartinhour
F. E. Foster
G. H. Gowdy
T. R. Hardin
W. L. Harding
G. O. Hazzard
E. C. Kistner, Jr.
J. J. O'Connor
W. E. Somers
J. L. Sullivan

Subgroup on Fire Tube Boilers

A. M. Bain, *Chairman*
H. M. Canavan
L. W. Eubank
J. F. Johnston
E. O. Peterson
E. J. Risseeuw
R. L. Rogers
G. Welter

SUBCOMMITTEE ON CARE OF STEAM BOILERS IN SERVICE (SCVII)

F. L. Bradley, *Chairman*
R. A. Baker
R. J. Brown
J. R. Buss
W. H. Byrne
H. M. Canavan
H. A. Decker
F. G. Feeley, Jr.
M. L. Jones
A. G. Pasini
W. T. Reid
C. E. Rodenburg
A. J. Ruch
L. B. Schueler
J. B. Smith
J. W. Tracht

Subgroup – Chemical

E. P. Partridge, *Chairman*
T. J. Finnegan
R. A. Lorenzini
E. A. Pirsh
S. F. Whirl

SUBCOMMITTEE ON MATERIALS SPECIFICATIONS (SCII)

R. F. Miller, *Chairman*
W. B. Hoyt, *Vice Chairman*
R. C. Griffin, *Secretary*
F. W. DeMoney
S. H. Finley
J. R. Lecron
W. E. Leyda
J. J. Moran
M. S. Northup
E. V. Pineda
A. O. Schaefer
W. G. Snyder
W. R. Sylvester
V. P. Weaver
F. S. G. Williams

Subgroup on Steel Plates

W. B. Hoyt, *Chairman*
V. W. Butler, *Secretary*
H. R. Boatman
A. G. Cook
S. H. Finley
C. R. Funk
R. C. Griffin
W. E. Joor
J. R. LeCron
R. E. Lorentz, Jr.
R. D. Webb

Subgroup on Steel Tubular Products

W. R. Sylvester, *Chairman*
R. W. Emerson
F. E. Foster
M. S. Northup
E. D. Rozic
E. E. Wagner
R. N. Zong

Subgroup on Steel Castings, Forgings & Bolting

A. O. Schaefer, *Chairman*
V. Anderson
P. A. Archibald
A. F. Gross
G. S. Hartman
W. F. Kramer
E. Landerman
J. D. Lewis
E. L. Murphy
J. Patton
H. C. Templeton
W. J. Wollering

Subgroup on Nonferrous Materials

F. W. DeMoney, *Chairman*
R. H. Mueller, *Secretary*
C. L. Bulow
R. A. Ecoff
J. A. Ford
M. Holt
R. L. Kane
R. E. Maersch
V. F. Nole
W. G. Snyder
J. W. Tackett
W. V. Waterbury
V. P. Weaver

SUBCOMMITTEE ON PROPERTIES OF METALS

W. L. Harding, *Chairman*
F. W. DeMoney, *Vice-Chairman*
R. H. Moeller, *Secretary*
P. M. Brister
E. C. Chapman
M. A. Cordovi
R. C. Fitzgerald
L. E. Gibbs
R. F. Gill
M. Holt
W. B. Hoyt
J. J. Kanter
E. C. Miller
C. E. Rawlins
I. A. Rohrig
D. C. Rollins
J. F. Sebald
G. V. Smith
W. R. Smith
W. E. Trumpler
F. A. Upson
R. D. Wylie

Subgroup on Toughness

C. E. Rawlins, *Chairman*
J. S. Clarke
F. W. DeMoney
J. H. Gross

Subgroup on Toughness (Cont'd)

M. Holt
J. L. Howard
J. R. Hunter
E. M. Kloeblen
P. P. Puzak
S. H. Rice
R. W. Schneider
R. D. Webb
F. S. G. Williams
D. E. Young

Subgroup on Fatigue Strength

R. F. Gill, *Chairman*
E. P. Esztergar
M. R. Gross
M. Holt
L. F. Kooistra
B. F. Langer
C. W. Lawton
J. E. McConnelee
J. J. Murphy

Subgroup on Quenched & Tempered Steel

W. B. Hoyt, *Chairman*
E. C. Chapman
J. R. England
R. F. Gill
R. C. Griffin
D. E. Young

Subgroup on Strength of Weldments

E. C. Chapman, *Chairman*
W. B. Hoyt
A. N. Kugler
R. Wylie

Subgroup on Strength-Steel & High Temperature Alloys

P. M. Brister, *Chairman*
W. E. Leyda, *Secretary*
C. W. Alexander
M. N. Bressler
J. Canal
E. C. Chapman
M. A. Cordovi
J. W. Freeman
R. F. Gill
W. B. Hoyt
A. M. Johnson
J. J. Kanter
R. A. Kozlik
I. A. Rohrig
G. J. Schnabel
G. V. Smith
W. R. Smith
C. E. Spaeder
W. E. Trumpler
R. D. Wylie

Subgroup on Strength-Nonferrous Alloys

F. W. DeMoney, *Chairman*
R. H. Moeller, *Secretary*
C. L. Bulow
R. A. Ecoff
J. A. Ford
M. Holt
R. L. Kane
R. E. Maersch
V. F. Nole
W. G. Snyder
J. W. Tackett
W. V. Waterbury
V. P. Weaver

SUBCOMMITTEE ON NUCLEAR POWER (SCIII)

B. F. Langer, *Chairman*
W. E. Cooper, *Vice Chairman*
F. N. Moschini, *Secretary*
P. C. Arnold
R. J. Bosnak
F. W. Catudal
M. A. Cordovi
J. F. Harvey
M. J. Letich
R. R. Maccary
C. R. McCullough
J. L. Mershon
E. C. Miller
W. Miller
W. Rockenhauser
F. M. Sayers
D. W. Sher
W. R. Smith, Sr.
K. R. Wichman

SUBCOMMITTEE ON NUCLEAR POWER (SCIII) (CONT'D)

Subgroup on Design

D. W. Sher, *Chairman*
R. M. Stone, *Secretary*
R. W. Decker
J. F. Harvey
F. J. Mehringer
R. E. Tome

Subgroup on Fabrication and Non-Destructive Testing

E. C. Miller, *Chairman*
P. C. Arnold
W. B. Bunn
W. M. Byerley
R. A. Ecoff
J. L. Mershon
J. L. Perkins
W. R. Smith, Sr.

Subgroup on Materials

W. R. Smith, Sr., *Chairman*
J. Alger
W. B. Bunn
M. A. Cordovi
C. R. Funk
R. Straiton
E. Landerman
E. C. Miller

Subgroup on Genl. Reqs.

F. W. Catudal, *Chairman*
R. J. Bosnak
M. J. Letich
R. R. Maccary
C. R. McCullough
F. N. Moschini
F. M. Sayers

SUBCOMMITTEE ON HEATING BOILERS (SCIV)

T. R. Hardin, *Chairman*
J. W. James, *Vice Chairman*
E. D. Dow, Jr., *Secretary*
J. F. Ellis
G. E. Fratcher
S. F. Harrison
J. F. Johnston
L. P. Malstrom
T. H. Milton
E. O. Peterson
R. L. Rogers
E. T. Selig
D. Snyder
A. I. Snyder
J. R. Thomson
J. E. Vaughn

SUBCOMMITTEE ON PRESSURE VESSELS (SCVIII)

L. P. Zick, *Chairman*
W. R. Mikesell, *Secretary*
B. W. Bace
R. J. Cepluch
J. S. Clarke
G. E. Fratcher
J. J. Kane
W. L. Killen
E. M. Kloeblen
D. R. Loper
E. O. Mattocks
C. V. Moore
M. S. Nehls
H. G. Parker
C. E. Rawlins
N. J. Rees
S. H. Rice
M. Rodinos
J. F. Sebald
L. E. Spry
D. B. Wesstrom

SUBCOMMITTEE ON WELDING (SCIX)

G. E. Fratcher, *Chairman*
H. A. Reeves, *Secretary*
P. C. Arnold
F. R. Baysinger
J. Bland
E. D. Dow, Jr.
R. W. Emerson
F. E. Foster
R. G. Goller
G. B. Grable
R. C. Griffin
J. F. Hanley

SUBCOMMITTEE ON WELDING (CONT'D)

H. L. Helmbrecht
A. N. Kugler
R. E. Lorentz, Jr.
J. P. Myers
H. Sayre
N. G. Schreiner
K. M. Spicer
C. B. Voldrich
W. V. Waterbury

SUBCOMMITTEE ON CODE SYMBOL STAMPS

E. O. Peterson, *Chairman*
J. D. Andrew, Jr.
N. J. Rees

SUBCOMMITTEE ON DESIGN

W. E. Cooper, *Chairman*
W. H. Tuppeny, Jr., *Secretary*
J. D. Andrew, Jr.
E. P. Esztergar
B. F. Langer
J. LeCoff
R. W. Schneider
D. B. Wesstrom
L. P. Zick

Subgroup on Design Analysis

J. LeCoff, *Chairman*
E. M. Lawrence, *Secretary*
H. Kraus
W. W. McPherson
W. J. O'Donnell
E. R. Sliwinski
J. J. Szigety
S. W. Tagart
W. H. Tuppeny, Jr.
F. J. Witt
Z. Zudans

Subgroup on Design Rules

R. W. Schneider, *Chairman*
R. J. Bosnak
E. D. Dow, Jr.
J. R. Farr
D. D. Frederick
W. R. Mikesell
D. C. Rollins
C. M. Vogrin
D. Witkin

Subgroup on Openings and Attachments

J. D. Andrew, Jr., *Chairman*
G. B. Boon
M. N. Bressler
R. J. Cepluch
R. L. Cloud
H. Liessenberg
J. L. Mershon
W. R. Mikesell
J. A. Mottram
E. C. Rodabaugh
H. H. Schneider
T. Uragami
K. R. Wickman
H. D. Yorston

Subgroup on External Pressure

D. B. Wesstrom, *Chairman*
R. B. Allnutt
G. B. Boon
R. M. Douglas
M. Holt
A. Lohmeier
H. W. Marsh
R. G. Sturm

Subgroup on Elevated Temperature

E. P. Esztergar, *Chairman*
B. E. Bolton
C. W. Lawton
J. E. McConnellee
R. L. Miller
J. J. Murphy

Subgroup on Elevated Temperature (Cont'd)

W. J. O'Donnell
R. J. Slember
G. V. Smith

SUBCOMMITTEE ON SAFETY VALVE REQUIREMENTS

E. O. Peterson, *Chairman*
J. U. Baley
O. E. Buxton, Jr.
E. W. Carr
J. L. Corcoran
H. E. Ferrill
W. L. Harding
J. W. James
E. Klafstad
J. P. Myers
R. E. Poethig

SUBCOMMITTEE ON NON-DESTRUCTIVE TESTING

E. C. Miller, *Chairman*
G. R. Forrer, *Vice Chairman*
H. F. Jackson, *Secretary*
P. C. Arnold
Alex Bigar
H. G. Bogart
E. L. Criscuola
G. M. Corney
J. Bobbin
R. J. Brown
L. J. Chockie
B. H. Clark, Jr
W. G. Henderson
W. C. Herman
F. T. Luga
W. H. Mayo
H. S. Mauk
W. C. McGaughey
D. A. Olsson
F. C. Parker
E. S. Procter
R. J. Roehrs
P. N. Seran
G. H. Tenney
C. J. Veith
C. H. Voelker

Subgroup on Ultrasonics

W. C. McGaughey, *Chairman*
B. H. Clark, Jr., *Secretary*
P. C. Arnold
Alex Bigar
J. Bobbin
Henry Bogart
L. J. Chockie
G. F. Forrer
H. F. Jackson
W. C. Minton
D. A. Olsson
F. C. Parker
R. J. Roehrs
C. J. Veith
C. H. Voelker

Subgroup on Radiography

C. H. Voelker, *Chairman*
J. Delisa, *Secretary*
P. C. Arnold
John Battema.
G. M. Corney
E. L. Criscuolo
G. R. Forrer
W. Herman
G. H. Tenney
C. J. Veith

Subgroup on Surface Examination

Henry Bogart, *Chairman*
R. J. Roehrs, *Secretary*
L. T. Detlor
G. R. Forrer
C. H. Voelker
Jos. Wright

Contents

	PAR.	PAGE
Foreword		(c)
Scope	U-1	1
General	U-2	2

Subsection A General Requirements

PART UG—General Requirements for All Methods of Construction and All Materials

Materials	UG-5	4
Design	UG-16	7
Openings and Reinforcements	UG-36	24
Braced and Stayed Surfaces	UG-47	32
Ligaments	UG-53	33
Fabrication	UG-75	37
Inspection and Tests	UG-90	42
Stamping and Reports	UG-115	50
Pressure-Relief Devices	UG-125	53

Subsection B Requirements Pertaining to Methods of Fabrication of Pressure Vessels

PART UW—Requirements for Pressure Vessels Fabricated by Welding

General	UW-1	59
Materials	UW-5	61
Design	UW-8	61
Fabrication	UW-26	73
Inspection and Tests	UW-46	77
Stamping and Reports	UW-60	81
Pressure-Relief Devices	UW-65	81

PART UR—Requirements for Pressure Vessels Fabricated by Riveting

General	UR-1	82
Materials	UR-5	82
Design	UR-10	82
Fabrication	UR-30	85
Inspection and Tests	UR-50	87
Stamping and Reports	UR-60	87
Pressure-Relief Devices	UR-65	87

PART UF—Requirements for Pressure Vessels Fabricated by Forging

General	UF-1	88
Materials	UF-5	88
Design	UF-12	88
Fabrication	UF-26	89
Inspection and Tests	UF-45	91
Stamping and Reports	UF-115	91
Pressure-Relief Devices	UF-125	91

PART UB—Requirements for Pressure Vessels Fabricated by Brazing

General	UB-1	93
Materials	UB-5	93
Design	UB-9	93
Fabrication	UB-30	96
Inspection and Tests	UB-40	98
Stamping and Reports	UB-50	99
Pressure Relief Devices	UB-55	99

Subsection C Requirements Pertaining to Classes of Materials

PART UCS—Requirements for Pressure Vessels Constructed of Carbon and Low-Alloy Steels

General	UCS-1	100
Materials	UCS-5	100
Design	UCS-16	116
Low-Temperature Operation	UCS-65	119
Fabrication	UCS-75	120
Inspection and Tests	UCS-90	120
Stamping and Reports	UCS-115	120
Pressure-Relief Devices	UCS-125	120

PART UNF—Requirements for Pressure Vessels Constructed of Nonferrous Materials

General	UNF-1	121
Materials	UNF-5	121
Design	UNF-16	122
Fabrication	UNF-75	123
Inspection and Tests	UNF-90	123
Stamping and Reports	UNF-115	147
Pressure-Relief Devices	UNF-125	147
Non-Mandatory Appendix NF		147

PART UHA—Requirements for Pressure Vessels Constructed of High-Alloy Steel

General	UHA-1	153
Materials	UHA-11	153

	PAR.	PAGE
Design	UHA-20	153
Fabrication	UHA-40	166
Inspection and Tests	UHA-50	167
Stamping and Reports	UHA-60	167
Pressure-Relief Devices	UHA-65	167
Non-Mandatory Appendix HA	UHA-100	167

PART UCI–Requirements for Pressure Vessels Constructed of Cast Iron

General	UCI-1	169
Materials	UCI-5	170
Design	UCI-16	170
Fabrication	UCI-75	171
Inspection and Tests	UCI-90	171
Stamping and Reports	UCI-115	172
Pressure Relief Devices	UCI-125	172

PART UCL–Requirements for Welded Pressure Vessels Constructed of Integrally Clad Plate or With Applied Corrosion-Resistant Linings

General	UCL-1	172
Materials	UCL-10	173
Design	UCL-20	173
Fabrication	UCL-30	174
Inspection and Tests	UCL-50	177
Stamping and Reports	UCL-55	177
Pressure-Relief Devices	UCL-60	178

PART UCN–Requirements for Pressure Vessels Constructed of Cast Nodular Iron

General	UCN-1	178
Materials	UCN-5	178
Design	UCN-16	179
Fabrication	UCN-75	180
Inspection and Tests	UCN-90	181
Stamping and Report	UCN-115	181
Pressure Relief Devices	UCN-125	181

PART UHT–Requirements for Pressure Vessels Constructed of Ferritic Steels with Properties Enhanced by Heat Treatment

General	UHT-1	182
Materials	UHT-5	182
Design	UHT-16	183
Fabrication	UHT-75	188
Inspection and Tests	UHT-90	190
Stamping and Reports	UHT-115	190
Pressure Relief Devices	UHT-125	190

Mandatory Appendices

	PAR.	PAGE
APPENDIX I – Supplementary Design Formulas	UA-1	190
APPENDIX II – Rules for Bolted Flanged Connections	UA-45	199
APPENDIX III – Definitions	UA-60	211
APPENDIX IV – Porosity Charts		215
APPENDIX V – Charts for Determining Shell Thickness of Cylindrical and Spherical Vessels Under External Pressure		221
APPENDIX VI – Methods for Magnetic Particle Inspection – MT	UA-70	255
APPENDIX VII – Inspection and Testing of Steel Castings	UA-80	258
APPENDIX VIII – Methods for Liquid Penetrant Examination – PT	UA-91	260

Non-Mandatory Appendices

APPENDIX A – *See Mandatory Appendix IV*		
APPENDIX B – Approval of New Materials	UA-110	263
APPENDIX C – Method for Obtaining Operating Temperature of Vessel Walls in Service	UA-130	265
APPENDIX D – Suggested Good Practice Regarding Internal Structures	UA-140	265
APPENDIX E – Suggested Good Practice Regarding Corrosion Allowance	UA-155	266
APPENDIX F – Suggested Good Practice Regarding Lingings	UA-170	266
APPENDIX G – Suggested Good Practice Regarding Design of Supports	UA-185	267
APPENDIX J – Capacity Conversion for Safety Valves	UA-230	269
APPENDIX K – Sectioning of Welded Joints	UA-250	271
APPENDIX L – Examples Illustrating the Application of Code Formulas and Rules	UA-270	273
APPENDIX M – Installation and Operation	UA-350	286
APPENDIX P – Basis for Establishing Stress Values for Ferrous Materials	UA-500	288
APPENDIX Q – Basis for Establishing Stress Values for Nonferrous Materials	UA-600	289
APPENDIX R – Preheating		289
APPENDIX S – Design Considerations for Bolted Flange Connections		291
APPENDIX T – Temperature Protection		293
APPENDIX U – Ultrasonic Examination of Welds – UT	UA-900	293

ASME BOILER and PRESSURE VESSEL CODE

SECTION VIII
DIVISION 1

PRESSURE VESSELS

The 1968 Edition of Section VIII Division 1, Pressure Vessels, was approved by the Council of The American Society of Mechanical Engineers on August 15, 1967. Section VIII Division 2, Alternative Rules for Pressure Vessels, is to be published at a later date.

SCOPE

U-1 Scope

(a) The rules in this Division of Section VIII of the Code cover minimum construction requirements for the design, fabrication, inspection and certification of pressure vessels other than those covered by Section I, Section III, and Section IV. This section of the Code does not cover Fired Process Tubular Heaters.

Division 1 of Section VIII is divided into three Subsections. Subsection A consists of Part UG covering the general requirements applicable to all pressure vessels. Subsection B covers the specific requirements that are applicable to the various methods used in the fabrication of pressure vessels. It consists of Parts UW, UR, UF, and UB, dealing with welded, riveted, forged, and brazed methods, respectively. Subsection C covers specific requirements applicable to the several classes of materials used in pressure vessel construction. It consists of Parts UCS, UNF, UHA, UCI, UCL, UCN, and UHT dealing with carbon and low-alloy steels, nonferrous metals, high-alloy steels, cast iron, clad and lined material, cast nodular iron, and ferritic steels with properties enhanced by heat treatment, respectively.

(b) The rules of this Division of Section VIII of the Code have been formulated on the basis of design principles and construction practices applicable to vessels designed for pressures not exceeding 3000 psi. For pressures above 3000 psi, deviations from and additions to these rules usually are necessary to meet the requirements of design principles and construction practices for

these higher pressures. Only in the event that after having applied these additional design principles and construction practices the vessel still complies with all of the requirements of the Code may it be stamped with the Code symbol.

(c) It is intended that Code jurisdiction over piping external to a pressure vessel shall terminate at:

(1) The first circumferential joint for welding end connections;

(2) The face of the first flange in bolted flanged connections;

(3) The first threaded joint in that type of connection.

(d) The following classifications are not considered to be within the jurisdiction of this Division of Section VIII.

(1) Pressure vessels subject to Federal control;

(2) Vessels with a nominal water-containing capacity of 120 gallons or less for containing water under pressure, including those containing air, the compression of which serves only as a cushion;

(3) A hot-water supply storage tank heated by steam or any other indirect means when none of the following limitations is exceeded:

(a) A heat input of 200,000 Btu per hr,

(b) A water temperature of 200 F,

(c) A nominal water-containing capacity of 120 gallons;

(4) Vessels having an internal or external operating pressure not exceeding 15 psi with no limitation on size (see Par. UG-28 (e));

(5) Vessels having an inside diameter not exceeding 6 in. with no limitation on pressure.

(e) Unfired steam boilers as defined in Section I shall be constructed in accordance with the rules of Section I or this Division of Section VIII [see Par. UW-2(c)]. The following pressure vessels in which steam is generated shall be constructed in accordance with the rules of this Division:

(1) Vessels known as evaporators or heat exchangers.

(2) Vessels in which steam is generated incidental to the operation of a processing system containing a number of pressure vessels, such as are used in chemical and petroleum products manufacture.

(f) Pressure vessels not covered by Par. U-1 (e) (1) and (2) or by Sections I, III, and IV, and not excluded by Par. U-1 (d), shall be constructed in accordance with the rules of this Division.

(g) Any pressure vessel which meets all of the requirements of this Division of Section VIII, including those for inspection, may be stamped with the Code U-symbol even though exempted from such stamping.

(h) Pressure vessels exclusive of those covered in (d) and (e) that are not required by the rules of this Division to be fully radiographed and that do not exceed the following volume and pressure limits, may be exempted from inspection by qualified inspectors as defined in Par. UG-91, provided that they comply in all other respects with the requirements of this Division:

(1) 5 cu ft in volume and 250 psi design pressure;

(2) 1½ cu ft in volume and 600 psi design pressure.

Vessels exempted from Code inspection by this rule shall be marked with the UM-symbol in Fig. UG-116 (b) and with the data required in Par. UG-116. A certificate for vessels exempted from Code inspection shall be furnished by the manufacturer on Form U-3 when requested. In an assembly of vessels the limitations in (1) and (2) apply to each vessel and not to the assembly as a whole.

GENERAL

U-2 General

(a) The user or his designated agent shall establish the design requirements for pressure vessels, taking into consideration factors associated with normal operation, and such other conditions as start-up and shut-down.

(b) The manufacturer of a pressure vessel that is to be marked with the Code U-Symbol or UM-Symbol shall have available for review the design calculations for the vessel and shall construct the vessel in accordance with the requirements of this Division.

(c) A vessel may be designed and constructed using any combination of the methods of fabrication and the classes of materials covered by this Division provided the rules applying to each method and material are complied with and the vessel is marked as required by Par. UG-116.

(d) When the strength of any part cannot be computed with a satisfactory assurance of safety, the rules provide procedures for establishing its maximum allowable working pressure.

(e) The inspector shall satisfy himself that the design calculations have been made and that the specified design requirements, have been taken into account in the design of the vessel. The inspector shall make such inspections of vessels, to which he authorizes the application of the Code U-Symbol, as he believes are needed to

enable him to certify that the vessel has been constructed in accordance with the requirements of this Division of the Code.

(f) It is the intent that the fundamental rules for design and the tests prescribed herein shall serve as a sufficient basis for an inspector, during construction, to judge the safety of the vessel and to justify the application of the Code symbol.

(g) This Division of Section VIII does not contain rules to cover all details of design and construction. Where complete details are not given, it is intended that the manufacturer, subject to the approval of the authorized inspector, shall provide details of design and construction which will be as safe as those provided by the rules of this Division.

SUBSECTION A
General Requirements

PART UG

General Requirements for All Methods of Construction and All Materials

UG-1 Scope

The requirements of Part UG are applicable to all pressure vessels and vessel parts and shall be used in conjunction with the specific requirements in Subsections B and C that pertain to the method of fabrication and the material used.

MATERIALS

UG-5 General

(a) Material subject to stress due to pressure shall conform to one of the specifications given in Section II of the Code and shall be limited to those that are permitted in the applicable Part of Subsection C, except as otherwise permitted in Pars. UG-10 and UG-11.

(b) Material covered by specifications in Section II is not restricted as to the method of production unless so stated in the specification, and so long as the product complies with the requirements of the specification. (See Par. UG-85)

(c) Materials other than those allowed by the Code may not be used, unless data thereon are submitted to and approved by the Boiler and Pressure Vessel Committee in accordance with Appendix B.

(d) Materials outside the limits of size and/or thickness given in the title or scope clause of the specifications given in Section II of the Code, and permitted by the applicable part of Subsection C, may be used if the material is in compliance with the other requirements of the specification,[1] and no size or thickness limitation is given in the rules for construction. In those specifications in which chemical composition or mechanical properties vary with size or thickness, materials outside the range shall be required to conform to the composition and mechanical properties shown for the nearest specified range.

(e) It is recommended that the user or his designated agent assure himself that materials used

[1] In some instances the limitations of the scope clause in the material specifications are based on a very realistic maximum. It is recommended that the designer and/or fabricator confer with the material supplier before proceeding, thus assuring himself that except for size or thickness, all requirements of the material specification will be met and so certified.

for the construction of the vessels will be suitable for the intended service with respect to retention of satisfactory mechanical properties, and resistance to corrosion, erosion, oxidation and other deterioration during their intended service life.

UG-6 Plate[1]

(a) Plate used in the construction of pressure parts of pressure vessels shall conform to one of the specifications in Section II of the Code for which allowable stress values are given in Subsection C, except as otherwise provided in (b) and (c) and Pars. UG-5, UG-10, and UG-11.

(b) Material not identified by mill test reports may be used for nonpressure parts such as skirts, baffles, and supporting lugs. A double-welded butt-joint test plate shall be made from each lot of all such material over ⅝ inch thick that is to be welded. Guided bend specimens made from the test plates shall pass the tests specified in Table Q-13 of Section IX of the Code. The allowable stress value shall not exceed 80 per cent of the maximum allowable stress value permitted for similar material in Subsection C. Satisfactory performance of a specimen in these tests shall not make the plate acceptable for use in pressure parts of a vessel.

UG-7 Forgings

Forged and rolled material may be used in pressure vessel construction provided the material has been worked sufficiently to remove the coarse ingot structure. Specifications and maximum allowable stress values for acceptable forging materials are given in Subsection C. (See Part UF for forged vessels.)

UG-8 Castings

Cast material may be used in the construction of pressure vessels and vessel parts. Specifications and maximum allowable stress values for acceptable casting materials are given in Subsection C. These allowable stress values shall be multiplied by the applicable casting quality factor given in Par. UG-24 for all materials except cast iron.

UG-9 Pipe and Tubes

(a) Pipe and tubes of seamless or welded construction conforming to one of the specifications given in Section II of the Code may be used for shells and other parts of pressure vessels. Allowable stress values for the materials used in pipe and tubes are given in Subsection C. These stress values may be used without reduction for seamless pipe and tubes, whereas the allowable stress values for welded pipe and tubes shall be as prescribed in the applicable Part of Subsection C.

(b) Integrally finned tubes may be made from tubes that conform in every respect with one of the specifications given in Section II except that the pressure test is not required for nonferrous tubes. These tubes may be used under the following conditions:

(1) The tubes after finning shall have a temper or condition which conforms to one of those provided in the governing specifications.

(2) The maximum allowable stress value for the finned tube shall be that given in Subsection C for the tube before finning, except as permitted in (3).

(3) The maximum allowable stress value for a temper or condition that has a higher stress value than that of the tube before finning may be used provided that qualifying tensile tests demonstrate that such a temper or condition is obtained. The qualifying tensile tests shall be made on specimens of finned tube from which the fins have been removed by machining.

(4) The maximum allowable internal or external working pressure of the tube shall be based on the minimum wall thickness of the finned section or of the unfinned section, whichever is smaller.

(5) In addition to the tests required by the governing specification (except for pressure tests for nonferrous tubes), each tube after finning shall withstand without evidence of leakage an internal pneumatic test of not less than 250 psi for five seconds while immersed in water or other suitable liquid.

UG-10 Materials Not Fully Identified

Any plate material or tubular product not completely identified with a Code-approved specification shall be accepted as satisfying the requirements of a specification to be designated from among those given in Section II, provided that it satisfies the conditions given in either (a) or (b).

(a) Each piece is shown to have chemical requirements and physical properties within the permissible range of the designated specification in Section II by an authentic test record and by marking identifying it with that record. When the designated specification requires other tests or more restrictive tests than those of the specification covered by the authentic test record, the material shall be subjected to sufficient additional tests to satisfy the inspector that it complies with the designated specification.

[1] The term "plate" for the purpose of this usage includes sheet and strip also.

(b) Each piece is tested as follows to show that it complies with the chemical requirements and physical properties of the designated specification in Section II.

(1) *Plate* The chemical check analyses and physical tests of plates shall be made as required in the designated specification with the following modifications. The carbon and manganese contents shall be determined in all check analyses. The inspector shall decide whether these contents are acceptable when the designated specification does not specify carbon and manganese limits. When the direction of rolling is not definitely known, two tension specimens shall be taken at right angles to each other from a corner of each plate, and two bend specimens shall be taken from the middle of adjacent sides of each plate. One tension specimen and both bend specimens shall meet the specification requirements.

(2) *Tubes and Pipe* Each length of tube or pipe shall be subjected to a chemical check analysis and sufficient physical tests to satisfy the inspector that all the material is identified with a given heat or heat-treatment lot, and that the material complies with the chemical and physical requirements of the designated specification. Material specified as suitable for welding, cold-bending, close-coiling, and similar operations shall be given sufficient check tests to satisfy the inspector that it is suitable for the fabrication procedure to be used.

(c) When the identity of the material with the designated specification has been established in accordance with (a) or (b), each piece of material (except as alternatively provided in the specification for tubes or pipe) shall be marked to the satisfaction of the inspector by the manufacturer or the testing agency, with a marking giving the designated specification number and grade or type and a serial S-number identifying the particular lot of material. A suitable report, clearly marked as being a "Report on Tests of Non-Identified Material," shall be furnished, properly filled out and certified by the manufacturer or testing agency, and this report when approved by the inspector shall constitute authority to use the material as provided in the Code for designated specification.

UG-11 Miscellaneous Pressure Parts

Prefabricated or preformed pressure parts for pressure vessels which are subject to allowable working stresses due to internal or external pressure in the vessel and which are furnished by other than the shop of the manufacturer responsible for the completed vessel shall conform to all applicable requirements of this Division as related to a completed vessel, including inspection in the shop of the parts manufacturer and the furnishing of partial data reports as provided for in UG-120(b) except as permitted in (a), (b), and (c).

(a) *Cast, Forged, Rolled, or Die-Formed Standard Pressure Parts*

(1) Pressure parts such as pipe fittings, valves, flanges, nozzles, welding necks, welding caps, manhole frames and covers that are wholly formed by casting, forging, rolling, or die forming shall not require inspection, mill test reports, or partial data reports; however, they shall be made of materials permitted under this Division or in an accepted standard (such as USAS) covering the particular type of pressure part. Such parts shall be marked with the name or trademark of the manufacturer and such other markings as are required by the several standards. Such markings shall be considered as the manufacturer's certification that the product complies with the material specifications and standards indicated and is suitable for service at the rating indicated. The intent of the paragraph will have been met, if, in lieu of the detailed marking on the part itself, the parts described herein have been marked in any permanent or temporary manner that will serve to identify the part with the manufacturer's written listing of the particular items and such listings are available for examination by the Inspector.

(2) Parts of small size falling within this category for which it is difficult or impossible to obtain identified material or which may be stocked and for which mill test reports or certificates cannot be economically obtained and are not customarily furnished, and which do not appreciably affect the safety of the vessel, may be used for relatively unimportant parts or parts stressed to not more than fifty per cent of the stress value permitted by this Division provided they are suitable for the purpose intended and meet the approval of the inspector (See (1) and Par. UG-6(c)). The manufacturer of the completed vessel shall satisfy himself that the part is suitable for the design conditions specified for the completed vessel.

(b) *Cast, Forged, Rolled, or Die-Formed Non-Standard Pressure Parts* Pressure parts such as shells, heads, removable doors, and pipe coils that are wholly formed by casting, forging, rolling, or die forming may be supplied basically as materials. All such parts shall be made of materials permitted under this Division and the manufacturer of the part shall furnish mill test reports or other acceptable evidence to that effect. Such parts shall be marked with the name or trademark of the manufacturer and with such other markings as will serve to identify the particular parts with accompanying material identification. The manufacturer of the completed vessel shall satisfy himself that the part is suitable for the design conditions specified for the completed vessel.

(c) *Welded Standard Pressure Parts for Use Other Than The Shell of a Vessel*[1] Pressure parts such as pipe fittings, nozzles, welding necks, welding caps, valves, and flanges that are fabricated by one of the welding processes recognized by this Division shall not require inspection, mill test reports, or partial data reports provided:

(1) All such parts are made of materials permitted under this Division of Section VIII or in an accepted standard (such as USAS).

(2) If arc or gas welded, the welding complies with Pars. UW-26 to UW-40, incl.

Such parts shall be marked with the name or trademark of the manufacturer and with such other markings as will serve to identify the materials of which the parts are made. Such markings shall be considered as the manufacturer's certification that the product complies with (1). A statement by the parts manufacturer that all welding complies with Code requirements shall be accepted as evidence that the product complies with (2).

(3) If radiography or postweld heat treatment is required by Pars. UW-10 and UW-11, it may be performed either in the plant of the parts manufacturer or in the plant of the manufacturer of the completed vessel.

If the radiographing is done in the plant of the parts manufacturer, the completed radiographs, properly identified with the respective parts, shall be available to the authorized inspector. If the radiographs are examined in the plant of the parts manufacturer, parts data sheets shall be executed and forwarded to the vessel manufacturer.

(4) If heat treatment is performed at the plant of the parts manufacturer, a statement by the manufacturer that such treatment was performed shall be accepted as evidence of compliance with applicable Code paragraphs. The manufacturer of the completed vessel shall satisfy himself that the part is suitable for the design conditions specified for the completed vessel.

[1] Fusion welded pipe for use as the shell of a vessel shall be subject to the same requirements as a shell fabricated from plate, including inspection at the point of manufacture and partial data reports.

UG-12 Bolts and Studs

(a) Bolts and studs may be used for the attachment of removable parts, and for bolted joints as provided in Par. UR-19. Specifications, supplementary rules, and maximum allowable stress values for acceptable bolting materials are given in Subsection C.

(b) Studs shall be threaded full length or shall be machined down to the root diameter of the thread in the unthreaded portion.

UG-13 Nuts and Washers

(a) Nuts shall conform to the requirements in the applicable Part of Subsection C (see Pars. UCS-11 and UNF-13). They shall engage the threads for the full depth of the nut.

(b) The use of washers is optional. When used, they shall be of wrought materials.

UG-14 Rods and Bars

Rod and bar stock may be used in pressure vessel construction for pressure parts such as flange rings, stiffening rings, frames for reinforced openings, stays and staybolts, and similar parts. Rod and bar materials shall conform to the requirements for bars, bolting, or rivets in the applicable part of Subsection C.

DESIGN

UG-16 General

(a) The design of pressure vessels and vessel parts shall conform to the general design requirements in the following paragraphs and in addition to the specific requirements for *Design* given in the applicable Parts of Subsections B and C.

(b) *Minimum Thickness of Plate* The thickness after forming of any plate subject to pressure shall be not less than the minimum thickness specified in the applicable Part of Subsection C (see Pars. UCS-16(b), UNF-16(b) and UHA-20(b)).

(c) *Mill Under-Tolerance* Plate material shall be ordered not thinner than the design thickness (see Par. UA-60(h)(2)). Vessels made of plate furnished with an under-tolerance of not more than the smaller value of 0.01 in. or 6 per cent of the ordered thickness may be used at the full design pressure for the thickness ordered. If the specification to which the plate is ordered allows a greater under-tolerance, the ordered thickness of the material shall be sufficiently greater than

the design thickness so that the thickness of the material furnished is not more than the smaller of 0.01 in. or 6 per cent under the design thickness.

(d) *Pipe Under-Tolerance* If pipe or tube is ordered by its nominal wall thickness, the manufacturing under-tolerance on wall thickness shall be taken into account. The next heavier commercial wall thickness may then be used. The manufacturing under-tolerances are given in the several pipe and tube specifications listed in the applicable tables in Subsection C. After the minimum wall-thickness is determined, it shall be increased by an amount sufficient to provide the manufacturing under-tolerance allowed in the pipe or tube specification.

UG-17 Methods of Fabrication in Combination

A vessel may be designed and constructed by a combination of the methods of fabrication given in this Division, provided the rules applying to the respective methods of fabrication are followed and the vessel is limited to the service permitted by the method of fabrication having the most restrictive requirements (see Par. UG-116).

UG-18 Materials in Combination

A vessel may be designed and constructed of any combination of materials permitted in Subsection C, provided the applicable rules are followed and the requirements in Section IX for welding dissimilar metals are met.

NOTE: Because of the different thermal coefficients of expansion of dissimilar materials, caution should be exercised in design and construction under the provisions of this paragraph in order to avoid difficulties in service under extreme temperature conditions, or with unusual restraint of parts such as may occur at points of stress concentration and also because of metallurgical changes occurring at elevated temperatures. (See also *Galvanic Corrosion* in Appendix NF.)

UG-19 Special Constructions

(a) *Combination Units* When a pressure vessel unit consists of more than one independent pressure chamber, operating at the same or different pressures and temperatures, each such pressure chamber (vessel) shall be designed and constructed to withstand the most severe condition of coincident pressure and temperature expected in normal service. Only the parts of chambers which come within the scope of this Division, Par. U-1, need be constructed in compliance with its provisions.

(b) *Special Shapes* Vessels other than cylindrical and spherical and those for which no design rules are provided in this Division may be designed under the conditions set forth in Par. U-2.

(c) When no design rules are given and the strength of a pressure vessel or vessel part cannot be calculated with a satisfactory assurance of accuracy, the maximum allowable working pressure of the completed vessel shall be established in accordance with the provisions of Par. UG-101.

UG-20 Design Temperature

(a) Except as required in Par. UW-2(d) (3), the temperature used in design shall be not less than the mean metal temperature (through the thickness) expected under operating conditions for the part considered. [See footnotes 1 and 2 of paragraph UA-60(g)]. If necessary, the metal temperature shall be determined by computation using accepted heat transfer procedures or by measurement from equipment in service under equivalent operating conditions. In no case shall the temperature at the surface of the metal exceed the maximum temperature listed in the stress tables for materials nor exceed the temperature limitations specified elsewhere in this Division of Section VIII.

(b) When the occurrence of different metal temperatures during operation can be definitely predicted for different zones of a vessel, the design of the different zones may be based on their predicted temperatures. When sudden cyclic changes in temperature are apt to occur in normal operation with only minor pressure fluctuations, the design shall be governed by the highest probable operating metal temperature (or the lowest, for temperatures below –20F) and the corresponding pressure [see Par. UA-60(b)].

(c) Suggested methods for determining the working temperatures of the wall of vessels already in service are given in Appendix C.

UG-21 Design Pressure[1]

Vessels covered by this Division of Section VIII shall be designed for at least the most severe condition of coincident pressure and temperature expected in normal operation. For this condition, the maximum difference in pressure between the inside and outside of a vessel, or between any two chambers of a combination unit, shall be considered (see Pars. UG-98 and UA-60(b)).

UG-22 Loadings

The loadings to be considered in designing a vessel shall include:

(1) Internal or external design pressure (as defined in Par. UG-21);

(2) Impact loads, including rapidly fluctuating pressures;

[1] It is recommended that a suitable margin be provided above the pressure at which the vessel will be normally operated to allow for probable pressure surges in the vessel up to the setting of the pressure-relieving devices (see Par. UG-133).

(3) Weight of the vessel and normal contents under operating or test conditions. (This includes additional pressure due to static head of liquids);

(4) Superimposed loads such as other vessels, operating equipment, insulation, corrosion-resistant or erosion-resistant linings, and piping;

(5) Wind loads, and earthquake loads where required;

(6) Reactions of supporting lugs, rings, saddles or other types of supports (see Appendices D and G);

(7) The effect of temperature gradients on maximum stress.

UG-23 Maximum Allowable Stress Values

(a) The maximum allowable stress value is the maximum unit stress permitted in a given material used in a vessel constructed under these rules. The maximum allowable tensile stress values permitted for different materials are given in the following tables, which are included in Subsection C.

Table UCS-23 Maximum Allowable Stress Values in Tension for Carbon and Low-Alloy Steel
Table UNF-23 Maximum Allowable Stress Values in Tension for Nonferrous Metals
Table UHA-23 Maximum Allowable Stress Values in Tension for High-Alloy Steel
Table UCI-23 Maximum Allowable Stress Values in Tension for Cast Iron
Table UCN-23 Maximum Allowable Stress Values in Tension for Cast Nodular Iron
Table UHT-23 Maximum Allowable Stress Values in Tension for Ferritic Steels with Properties Enhanced by Heat Treatment
Table UCS-27 Maximum Allowable Stress Values in Tension for Carbon and Low-Alloy Pipe and Tubes of Welded Manufacture

(b) The maximum allowable compressive stress to be used in the design of cylindrical shells subjected to loadings that produce longitudinal compressive stress in the shell shall be the smaller of the following values:

(1) The maximum allowable tensile stress value permitted in (a)

(2) The value of the factor B determined from the applicable chart in Appendix V for determining the required thickness of shells and heads under external pressure, using the following definitions for the symbols on the chart:

t_h = the minimum required thickness of the shell plates, exclusive of corrosion allowances, inches.

L_1 = inside radius of cylindrical shell, inches.

The value of B shall be determined from the applicable chart of Appendix V in the following manner:

Step 1: Assume a value of t_h. Determine the ratio $L_1/100t_h$.

Step 2: Enter the left-hand side of the chart in Appendix V for the material under consideration at the value $L_1/100t_h$ determined in Step 1.

Step 3: Move horizontally to the line marked "Sphere Line."

Step 4: From this intersection move vertically to the material line for the design temperature (see Par. UG-20). (For intermediate temperatures, interpolations may be made between the material lines on the chart.)

Step 5: From this intersection move horizontally to the right and read the value of B. This is the maximum allowable compressive stress-value for the value of t_h used in Step 1.

Step 6: Compare this value of B with the computed longitudinal compressive stress in the vessel, using the assumed value of t_h. If the value of B is smaller than the computed stress, a greater value of t_h must be selected and the procedure repeated until a value of B is obtained which is greater than the value computed for the loading on the vessel.

The joint-efficiency for butt-welded joints may be taken as unity.

(c) The wall thickness of a vessel computed by these rules shall be determined so that the maximum direct (membrane) stress due to any combination of loadings listed in Par. UG-22 that are expected to occur simultaneously during normal operation[1] of the vessel does not exceed the maximum allowable stress value permitted at the temperature that is expected to be maintained in the metal under the condition of loading being considered.[2] Values may be interpolated for intermediate temperatures.[3]

UG-24 Castings

(a) *Quality Factors* A casting quality factor as specified below shall be applied to the allowable stress values for cast materials given in Subsection C except for castings permitted by

[1] See Definitions – Par. UA-60(d) and (h).

[2] It is recognized that high localized and secondary bending stresses may exist in vessels designed and fabricated in accordance with these rules. In so far as practical, design rules for details have been written to hold such stresses at a safe level consistent with experience.

[3] For the basis on which the tabulated stress values have been established, see Appendix P for steels, and Appendix Q for a similar basis applying only to nonferrous metals.

Part UCI. Definitions and radiographic standards are given in Appendix VII.

(1) A factor not to exceed 80 per cent shall be applied when a casting is inspected only in accordance with the minimum requirements of the specification for the material.

(2) For nonferrous and nodular cast iron materials, a factor not to exceed 90 per cent shall be applied if in addition to the minimum requirements of the specification:

(a) Each casting is subjected to a thorough inspection of all surfaces, particularly such as are exposed by machining or drilling, without revealing any injurious defects;

(b) At least three pilot castings[1] representing the first lot of five castings made from a new or altered design are sectioned or radiographed at all critical sections (see Note 1, Appendix VII) without revealing any injurious defects;

(c) One additional casting taken at random from every subsequent lot of five is sectioned or radiographed at all critical sections without revealing any injurious defects; and

(d) All castings other than those which have been radiographed are examined at all critical sections by a procedure using magnetic particles per Appendix VI or liquid penetrant or by grinding or machining and etching.

(3) For nonferrous and nodular cast iron materials, a factor not to exceed 90 per cent may be used for a single casting which has been radiographed at all critical sections and found free of injurious defects.

(4) For nonferrous and nodular cast iron materials, a factor not to exceed 90 per cent may be used for a casting which has been machined to the extent that all critical sections are exposed for inspection for the full wall thickness; as in tube sheets drilled with holes spaced no farther apart than the wall thickness of the casting. The inspection afforded may be taken in lieu of destructive or radiographic testing required in (2)(b).

(5) For carbon, low alloy, or high alloy steels a factor not to exceed 100 per cent may be applied if in addition to the minimum requirements of the specification the inspection and testing requirements of Appendix VII are met.

(b) *Defects* Serious defects shall be the basis of rejection of the casting. The inspector shall have the right to demand a similar inspection of any number of additional castings from the same heat until acceptable castings are consistently produced where a 90 or 100 per cent quality factor is used. Where defects not impairing the strength of the casting have been repaired by welding, the completed repair shall be subject to reinspection, and to obtain a 90 or 100 per cent factor, the repaired casting shall be stress-relieved.

(c) *Identification and Marking* Castings to which a quality factor of 90 or 100 per cent is to be applied shall be marked with the manufacturer's and materials identification marking and in addition the quality factor shall be clearly stamped on the casting. Test reports or certificates furnished by the manufacturer shall certify that the castings conform to the requirements of this Division.

[1] Pilot Casting—Any one casting, usually one of the first from a new pattern, poured of the same material and using the identical foundry procedure (risering, gating, pouring and melting) as the castings it is intended to represent. Any pilot casting or castings taken to represent a lot and the castings of that lot shall be poured from a heat of metal from which the castings on the current order are poured.

UG-25 Corrosion

(a) Vessels or parts of vessels subject to thinning by corrosion, erosion, or mechanical abrasion shall have provision made for the desired life of the vessel by a suitable increase in the thickness of the material over that determined by the design formulas, or by using some other suitable method of protection. (See Appendix E.)

Note: When using High Alloys and Nonferrous materials either for solid wall or clad or lined vessels, refer to Pars. UHA-6, UCL-3, and UNF-4, as appropriate.

(b) Material added for these purposes need not be of the same thickness for all parts of the vessel if different rates of attack are expected for the various parts.

(c) Except as required in Par. UCS-25, no additional thickness need be provided when previous experience in like service has shown that corrosion does not occur or is of only a superficial nature.

(d) *Telltale Holes* Telltale holes may be used to provide some positive indication when the thickness has been reduced to a dangerous degree. When telltale holes are provided they shall be at least $\frac{3}{16}$ in. in diameter and have a depth not less than 80 per cent of the thickness required for a seamless shell of like dimensions. These holes shall be provided in the surface opposite to that where deterioration is expected. (For telltale holes in clad or lined vessels, see Par. UCL-25(b)).

(e) *Openings for Drain* Vessels subject to corrosion shall be supplied with a suitable drain opening at the lowest point practicable in the vessel; or a pipe may be used extending inward from any other location to within $\frac{1}{4}$ in. of the lowest point.

UG-26 Linings

Corrosion-resistant or abrasion-resistant linings, whether or not attached to the wall of a vessel, shall not be considered as contributing to the strength of the wall except as permitted in Part UCL (see Appendix F).

UG-27 Thickness of Shells Under Internal Pressure

(a) The thickness of shells under internal pressure shall be not less than that computed by the following formulas.[1] In addition, provision shall be made for any of the other loadings listed in Par. UG-22, when such loadings are expected. (See Par. UG-16.)

(b) The notations defined below are used in the formulas of this paragraph.

t = minimum required thickness of shell plates, exclusive of corrosion allowance (see Par. UG-25), inches,

P = design pressure, pounds per square inch (see Par. UG-21), (or maximum allowable working pressure for existing vessels, see Par. UG-98),

R = inside radius of the shell course under consideration, before corrosion allowance is added, inches,

S = maximum allowable stress value, pounds per square inch (see applicable table of stress values in Subsection C),

E = joint efficiency for or the efficiency of appropriate joint in cylindrical shells and any joint in spherical shells, or the efficiency of ligaments between openings, whichever is less:

For welded vessels, use the efficiency specified in Par. UW-12.

For riveted joints, use the efficiency specified in Par. UR-15.

Where there is no joint normal to the direction of stress under consideration (e.g., no longitudinal joint when circumferential stress formulas are used), $E = 1$. For ligaments between openings, use the efficiency calculated by the rules given in Par. UG-53.

(c) *Cylindrical Shells* The minimum thickness or maximum allowable working pressure of cylindrical shells shall be the greater thickness or lesser pressure as given by (1) or (2):

(1) Circumferential stress (longitudinal joints) When the thickness does not exceed one-half of the inside radius, or P does not exceed 0.385 SE, the following formulas shall apply:

$$t = \frac{PR}{SE - 0.6P} \quad \text{or} \quad P = \frac{SEt}{R + 0.6t}$$

(2) Longitudinal stress (circumferential joints)[2] When the thickness does not exceed one-half of the inside radius, or P does not exceed 1.25 SE, the following formulas shall apply:

$$t = \frac{PR}{2SE + 0.4P} \quad \text{or} \quad P = \frac{2SEt}{R - 0.4t}$$

(d) *Spherical Shells* When the thickness of the shell of a wholly spherical vessel does not exceed 0.356 R, or P does not exceed 0.665 SE, the following formulas shall apply:

$$t = \frac{PR}{2SE - 0.2P} \quad \text{or} \quad P = \frac{2SEt}{R + 0.2t} \qquad (2)$$

(e) When necessary, vessels shall be provided with stiffeners or other additional means of support to prevent overstress or large distortions under the external loadings listed in Par. UG-22 other than pressure and temperature.

(f) A stayed jacket shell that extends completely around a cylindrical or spherical vessel shall also meet the requirements of Par. UG-47 (c).

[1] Formulas in terms of the outside radius and for thicknesses and pressures beyond the limits fixed in this paragraph are given in Pars. UA-1 to UA-3.

[2] These formulas will govern only when the circumferential joint efficiency is less than one-half the longitudinal joint efficiency, or when the effect of supplementary loadings (Par. UG-22) causing longitudinal bending or tension in conjunction with internal pressure is being investigated. An example illustrating this investigation is given in Appendix L (Par. UA-274(a) and (b)).

UG-28 Thickness of Shells Under External Pressure

(a) The rules for the design of shells under external pressure given in this Division are limited to spherical shells and cylindrical shells either with or without stiffening rings. Three typical forms of cylindrical shells are shown in Fig. UG-28. Charts for determining the required thickness of shells and heads are given in Appendix V.

(b) The notations defined below are used in the formulas of this paragraph:

t = minimum required thickness of cylindrical shell plates, exclusive of corrosion allowance, inches,

t_h = minimum required thickness of spherical shell plates, exclusive of corrosion allowance, inches,

L = design length of a vessel section, taken as the largest of the following: (1) the distance between head-bend lines plus one-third of the depth of each head if there are no stiffening rings; (2) the

greatest center-to-center distance between any two adjacent stiffening rings; or (3) the distance from the center of the first stiffening ring to the head-bend line plus one-third of the depth of the head, all measured parallel to the axis of the vessel, inches,

L_1 = inside radius of spherical shells, inches,

D_o = outside diameter of the cylindrical shell course under consideration, inches,

P = external design pressure, pounds per square inch (see Par. UG-28 (e) and (f)), (maximum allowable working pressure for existing vessels in operating position).

(c) *Cylindrical Shells* The required thickness of a cylindrical shell under external pressure, either seamless or with longitudinal butt joints, shall not be less than that determined by the following procedure:

Step 1: Assume a value for t. Determine the ratios L/D_o and D_o/t.

Step 2: Enter the left-hand side of the chart in Appendix V for the material under consideration at the value of L/D_o determined in Step 1.

Step 3: Move horizontally to the line representing D_o/t determined in Step 1.

Step 4: From this intersection move vertically to the material line for the maximum design temperature (see Par. UG-20). (For intermediate temperatures, interpolations may be made between the lines on the chart.)

Step 5: From this intersection move horizontally to the right and read the value of B.

Step 6: Compute the maximum allowable working pressure P_a by the following formula:

$$P_a = \frac{B}{D_o/t}$$

Step 7: Compare P_a with P. If P_a is smaller than P, a greater value for t must be selected and the design procedure reparted until a value for P_a is obtained that is equal to or greater than P. An example illustrating the use of this procedure is given in Appendix L (Par. UA-270 (a)).

(d) *Spherical Shells* The required thickness of a spherical shell under external pressure, either seamless or of built-up construction with butt joints, shall not be less than that determined by the following procedure:

Step 1: Assume a value for t_h. Determine the ratios L_1/t_h and $L_1/100t_h$.

Step 2: Enter the left-hand side of the chart in Appendix V for the material under consideration at the value of $L_1/100t_h$ determined in Step 1.

Step 3: Move horizontally to the line marked Sphere Line.

Step 4: From this intersection move vertically to the material line for the design temperature (see Par. UG-20). (For intermediate temperatures, interpolations may be made between the lines on the chart.)

Step 5: From this intersection move horizontally to the right and read the value of B.

Step 6: Compute the maximum allowable working pressure P_a by the following formula:

$$P_a = \frac{B}{L_1/t_h}$$

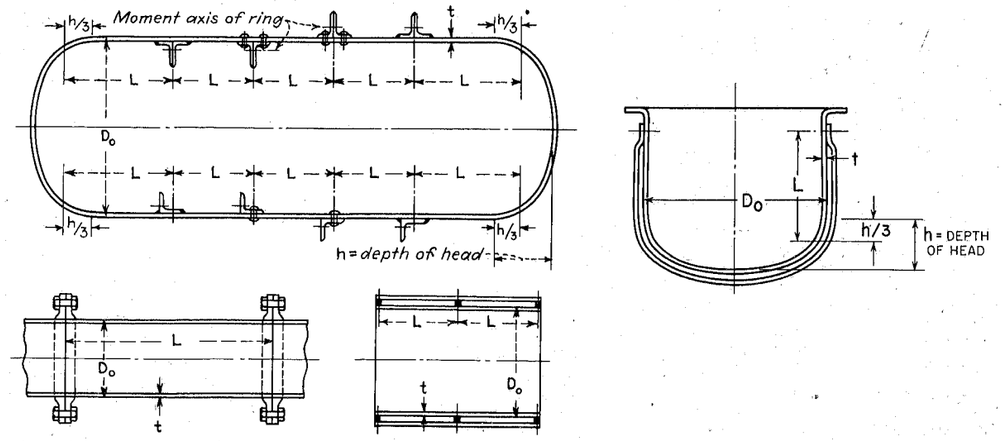

FIG. UG-28 DIAGRAMMATIC REPRESENTATION OF VARIABLES FOR DESIGN OF CYLINDRICAL VESSELS SUBJECTED TO EXTERNAL PRESSURE

Step 7: Compare P_a with P. If P_a is smaller than P a greater value for t_h must be selected and the design procedure repeated until a value for P_a is obtained that is equal to or greater than P. An example illustrating the use of this procedure is given in Appendix L (Par. UA-270 (b)).

(e) The design pressure or maximum allowable working pressure shall not be less than the maximum expected difference in operating pressure that may exist between the outside and the inside of the vessel at any time.

(f) Vessels intended for service under external working pressures of 15 psi or less, which are to be stamped with the Code symbol denoting compliance with the rules for external pressure, shall be designed for a maximum allowable external pressure of 15 psi or 25 per cent more than the maximum possible external pressure, whichever is smaller.

NOTE: Except as covered in Pars. UCS-66 (c) (2) and UHA-51 (b), a vessel which is designed and constructed to Code requirements for internal pressure and which may at times be subjected to an external pressure of 15 psi or less need not be constructed to Code requirements for the external pressure condition. Such a vessel may bear the Code symbol for the internal pressure condition.

(g) When there is a longitudinal lap joint in a cylindrical shell or any lap joint in a spherical shell under external pressure, the thickness of the shell shall be determined by the rules in this paragraph, except that $2P$ shall be used instead of P in the calculations for the required thickness.

(h) Circumferential joints in cylindrical shells may be of any type permitted by the Code and shall be designed for the imposed loads.

(i) Those portions of pressure chambers of vessels which are subject to a collapsing pressure and which have a shape other than that of a complete circular cylinder or formed head, and also jackets of cylindrical vessels which extend over only a portion of the circumference, shall be fully staybolted in accordance with the requirements of Pars. UG-47 through UG-50 or shall be proof-tested in compliance with Par. UG-101 (p).

(j) When necessary, vessels shall be provided with stiffeners or other additional means of support to prevent overstress or large distortions under the external loadings listed in Par. UG-22 other than pressure and temperature.

UG-29 Stiffening Rings for Cylindrical Shells Under External Pressure

(a) Except as exempted below in (f), the required moment of inertia of a circumferential stiffening ring shall not be less than that determined by the formula:

$$I_s = \frac{D_o^2 L_s \left(t + \frac{A_s}{L_s}\right) A}{14}$$

where I_s = required moment of inertia of the stiffening ring about its neutral axis parallel to the axis of the shell, inches[4],

A_s = cross-sectional area of the stiffening ring, square inches,

A = factor determined from the appropriate chart in Appendix V for the material used in the stiffening ring, corresponding to the Factor B (see below) and the design temperature for the shell under consideration,

L_s = one-half of the distance from the centerline of the stiffening ring to the next line of support on one side, plus one-half of the center line distance to the next line of support, if any, on the other side of the stiffening ring, both measured parallel to the axis of the

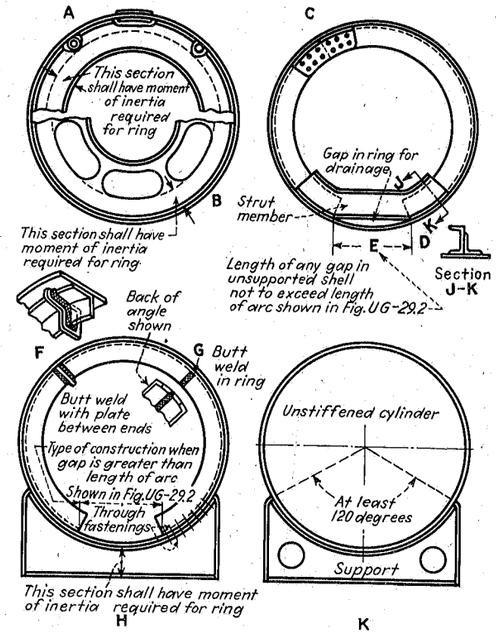

FIG. UG-29.1 VARIOUS ARRANGEMENTS OF STIFFENING RINGS FOR CYLINDRICAL VESSELS SUBJECTED TO EXTERNAL PRESSURE

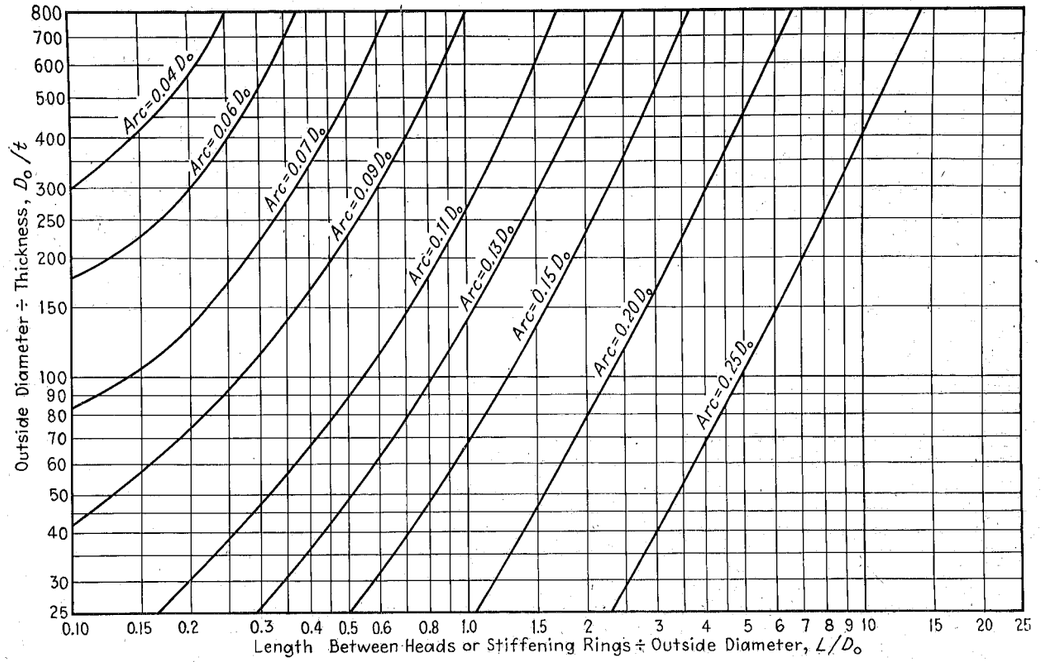

FIG. UG-29.2 MAXIMUM ARC OF SHELL LEFT UNSUPPORTED BECAUSE OF GAP IN STIFFENING RING OF CYLINDRICAL SHELL UNDER EXTERNAL PRESSURE

vessel, in. A line of support is (1) a stiffening ring that meets the requirements of this paragraph, (2) a circumferential connection to a jacket, or (3) a circumferential line on a head at one-third the depth of the head from the head-bend line, as shown in Fig. UG-28.

P, D_o and t are as defined in Par. UG-28 (b).

The moment of inertia for a stiffening ring shall be determined by the following procedure:

Step 1: Assuming that the shell has been designed and D_o, L_s and t are known, select a member to be used for the stiffening ring and determine its area, A_s, and moment of inertia, I. Then calculate B by the formula:

$$B = \frac{PD_o}{t + \frac{A_s}{L_s}}.$$

B = factor on the right-hand side of the appropriate chart in Appendix V for the material used in the stiffening ring.

Step 2: Enter the right-hand side of the chart in Appendix V for the material under consideration at the value of B determined by Step 1.

Step 3: Follow horizontally to the material line for the design temperature.

Step 4: Move vertically to the bottom of the chart and read the value of A.

Step 5: Compute the value of the required moment of inertia, I_s, from the formula given above.

Step 6: If the required I_s is greater than the moment of inertia, I, for the section selected in Step 1, a new section with a larger moment of inertia must be selected and a new I_s determined.

If the required I_s is smaller than I for the section selected in Step 1, that section should be satisfactory.

An example illustrating the use of this procedure is given in Appendix L (Par. UA-272).

(b) Stiffening rings shall extend completely around the circumference of the vessel. Any joints between the ends or sections of such rings, similar to those shown at C, D, F and G in Fig. UG-29.1, and any connections between adjacent portions of a stiffening ring lying inside or outside the shell as shown at H in Fig. UG-29.1, shall be made so that the required moment of inertia of the ring is maintained.

(c) Stiffening rings placed on the inside of a vessel may be arranged as shown at A and B in Figs. UG-29.1, provided that the moment of inertia required for the ring (see (a) above) is maintained within the sections indicated. The moment of inertia of each section shall be taken about its own neutral axis. However, any gap in that portion of a stiffening ring supporting the shell, as shown at A and E in Fig. UG-29.1, shall not exceed the length of arc as given in Fig. UG-29.2 unless additional reinforcement is provided as shown at H in Fig. UG-29.1 or unless:

(1) The length of unsupported shell arc does not exceed 90 deg; and

(2) The unsupported shell arcs in adjacent stiffening rings are staggered 180 deg; and

(3) The dimension L defined in Par. UG-28 (b) is taken as the larger of the following: the greatest distance between alternate stiffening rings, or the distance from the head bend line to the second stiffening ring plus one-third of the head depth.

(d) When internal plane structures perpendicular to the longitudinal axis of the cylinder, such as bubble trays or baffle plates, are used in a vessel, they may also be considered to act as stiffening rings provided they are designed to function as such.

(e) Any internal stays or supports for any purpose shall not bear against the shell of the vessel except through the medium of a substantially continuous ring.

NOTE: Attention is called to the objection to supporting vessels through the medium of legs or brackets, the arrangement of which may cause concentrated loads to be imposed on the shell. Vertical vessels should be supported through a substantial ring secured to the shell (see Par. UA-187). Horizontal vessels, unless supported at or close to the ends (heads) or at stiffening rings, should be supported through the medium of substantial members extending over at least one-third of the circumference, as shown at K in Fig. UG-29.1.

Attention is called also to the hazard of imposing highly concentrated loads by the improper support of one vessel on another or by the hanging or supporting of heavy weights directly on the shell of the vessel. (See Appendix G.)

(f) When closure bars or other rings are attached to both the inner shell and outer jacket of a vessel, with pressure in the space between the jacket and inner shell, this construction has adequate inherent stiffness, and therefore the rules of this paragraph do not apply.

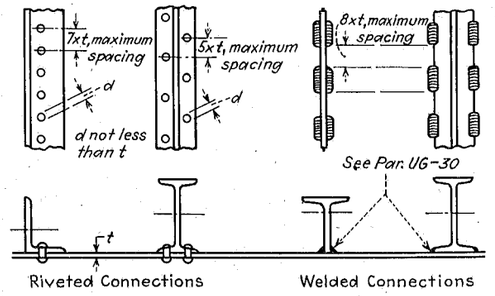

FIG. UG-30 SOME ACCEPTABLE METHODS OF ATTACHING STIFFENING RINGS TO SHELLS OF CYLINDRICAL VESSELS SUBJECTED TO EXTERNAL PRESSURE

UG-30 Attachment of Stiffening Rings to Shell

(a) Stiffening rings, when used, may be placed on the inside or outside of a vessel, and shall be attached to the shell by welding, brazing, riveting, or bolting. Brazing may be used if the vessel is not to be later stress-relieved. The ring should be in contact with the shell.

(b) Stiffening rings may be attached to the shell either by continuous or intermittent welding. The total length of the intermittent welding on each side of the stiffening ring shall be (1) not less than one-half the outside circumference of the vessel for rings on the outside; and (2) not less than one-third of the circumference of the vessel for rings on the inside. Acceptable arrangements and spacings of intermittent welds are shown in Fig. UG-30.

(c) If the rings are on the outside and riveted to the shell, the nominal diameter of the rivets shall be not less than the thickness of the shell plate, and the center-to-center distance of the rivet holes shall not exceed that required by Fig. UG-30.

(d) All attachments welding of stiffening rings shall comply with the requirements of this Code for the type of vessel under construction. Where corrosion must be provided for, the stiffening rings shall be attached to the shell with a continuous fillet or seal weld.

UG-31 Tubes, and Pipe When Used as Tubes

(a) *Internal Pressure* The required wall thickness for tubes and pipe under internal pressure shall be determined in accordance with the rules for shells in Par. UG-27.

(b) *External Pressure* The required wall thicknes for tubes and pipe under external pressure shall be determined in accordance with Fig. UG-31.

(c) The thickness as determined under (a) or (b) shall be increased when necessary to meet the following requirements:

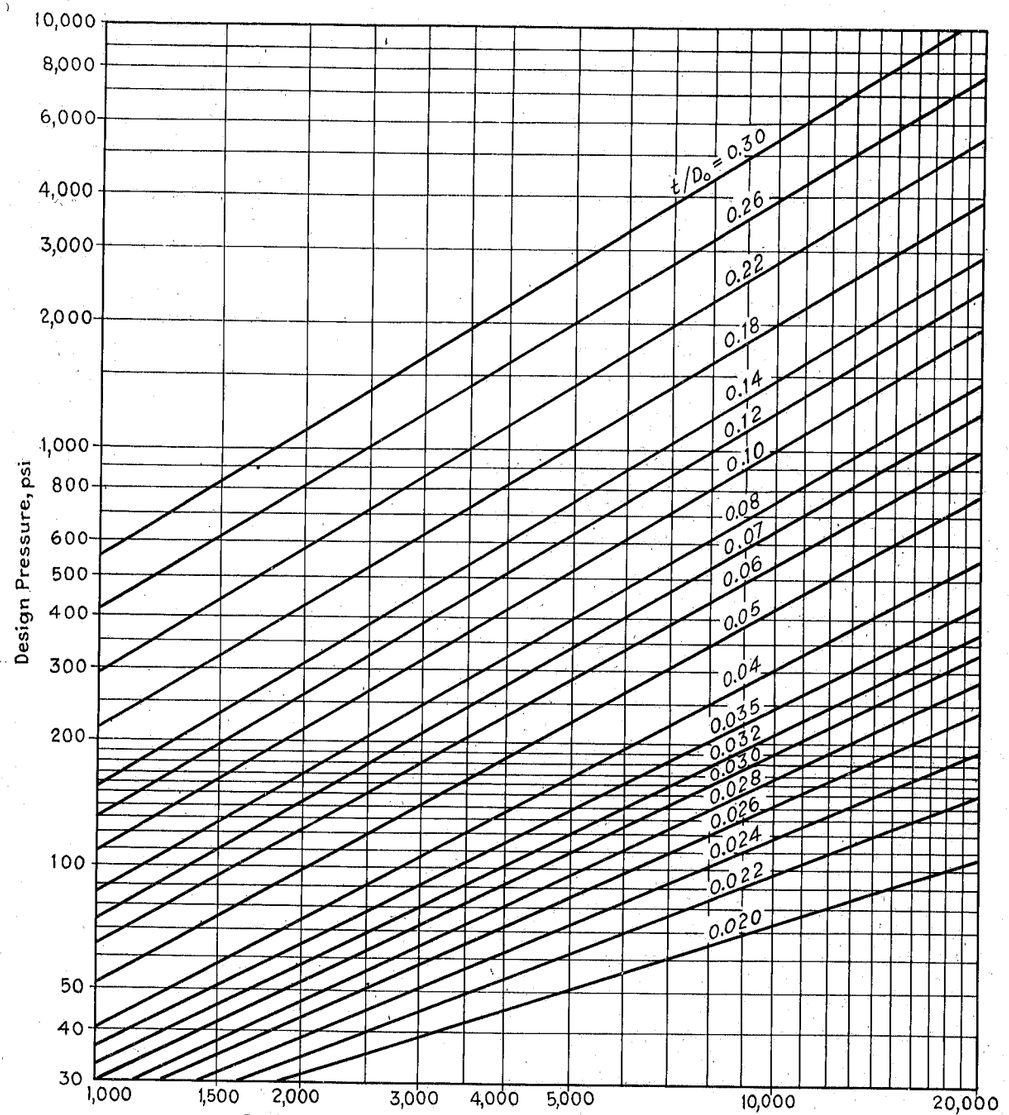

FIG. UG-31 CHART FOR DETERMINING WALL THICKNESS OF TUBES UNDER EXTERNAL PRESSURE

(1) Additional wall thickness should be provided when corrosion, erosion or wear due to cleaning operations is expected;

(2) Where tube ends are threaded, additional wall thickness is to be provided in the amount of $0.8/n$ in. (where n equals the number of threads per inch).

NOTE: The requirements for rolling, expanding, or otherwise seating tubes in tube plates may require additional wall thickness and careful choice of materials because of possible relaxation due to differential expansion stresses.

UG-32 Formed Heads, Pressure on Concave Side

(a) The required thickness at the thinnest point after forming[1] of ellipsoidal, torispherical, conical and hemispherical heads under pressure on the concave side (plus heads), shall be computed by the appropriate formulas in this paragraph[2] (see Par. UG-16). In addition, provision shall be made for any of the other loadings given in Par. UG-22.

(b) The thickness of an unstayed ellipsoidal or torispherical head shall in no case be less than the required thickness of a seamless hemispherical head divided by the efficiency of the head-to-shell joint.

(c) The notations defined below are used in the formulas of this paragraph:

t = minimum required thickness of head after forming, exclusive of corrosion allowance, inches;

P = design pressure, pounds per square inch (see Par. UG-21), (or maximum allowable working pressure for existing vessels, see Par. UG-98);

D = inside diameter of the head skirt; or inside length of the major axis of an ellipsoidal head; or inside diameter of a cone head at the point under consideration, measured perpendicular to the longitudinal axis; inches (measurements to be taken before corrosion allowance is added);

D_1 = inside diameter of the conical portion of a toriconical head at its point of tangency to the knuckle, measured perpendicular to the axis of the cone, inches;

S = maximum allowable stress value as given in Subsection C, pounds per square inch;

E = lowest efficiency of any joint in the head; for hemispherical heads this includes head-to-shell joint;
For welded vessels, use the efficiency specified in Par. UW-12,
For riveted joints, use the efficiency specified in Par. UR-15,
For seamless heads, use $E = 1$, except for hemispherical heads furnished without a skirt, in which case use the efficiency of the head-to-shell joint.

L = inside spherical or crown radius, inches;

α = one-half of the included (apex) angle of the cone at the centerline of the head (see Fig. UA-4)

(d) *Ellipsoidal Heads* The required thickness of a dished head of semi-ellipsoidal form, in which half the minor axis (inside depth of the head minus the skirt) equals one-fourth of the inside diameter of the head skirt, shall be determined by:

$$t = \frac{PD}{2SE - 0.2P} \text{ or } P = \frac{2SEt}{D + 0.2t} \qquad (1)$$

(e) *Torispherical Heads* The required thickness of a torispherical head, in which the knuckle radius is 6 per cent of the inside crown radius, (see (j)) shall be determined by:

$$t = \frac{0.885PL}{SE - 0.1P} \text{ or } P = \frac{SEt}{0.885L + 0.1t} \qquad (2)$$

(f) *Hemispherical Heads* When the thickness of a hemispherical head does not exceed $0.356L$, or P does not exceed $0.665SE$, the following formulas shall apply:

$$t = \frac{PL}{2SE - 0.2P} \text{ or } P = \frac{2SEt}{L + 0.2t} \qquad (3)$$

(g) *Conical Heads (Without Transition Knuckle)* The required thickness of conical heads or conical shell sections that have a half apex-angle α not greater than 30 degrees shall be determined by:

$$t = \frac{PD}{2\cos\alpha(SE - 0.6P)} \text{ or } P = \frac{2SEt\cos\alpha}{D + 1.2t\cos\alpha} \qquad (4)$$

A compression ring shall be provided when required by the rule in Par. UA-5(b) and (c).

(h) *Toriconical Heads* Toriconical heads in which the inside knuckle radius is neither less than 6 per cent of the outside diameter of the head skirt nor less than 3 times the knuckle thickness shall be used when the angle α exceeds 30 degrees except when the design complies with Par. UA-5(e). The required thickness of the knuckle shall be determined by formula (3) of Par. UA-4(d) in which

$$L = \frac{D_1}{2\cos\alpha}$$

The required thickness of the conical portion shall be determined by formula (4) in (g) above,

[1] In order to assure that a finished head is not less than the minimum thickness required, it is customary to use a thicker plate to take care of possible thinning during the process of forming. The neck of an opening in a head with an integrally flanged opening will thin out due to the fluing operation. This is permissible provided the neck thickness is not less than the thickness required for a cylindrical shell having a diameter equal to the maximum diameter of the opening. (See Par. UG-46(j).)

[2] Formulas in terms of outside dimensions and for heads of other proportions are given in Par. UA-4 together with illustrative examples.

using D_1 in place of D (see (c)).

(i) When an ellipsoidal, torispherical, hemispherical, conical, or toriconical head is of a lesser thickness than required by the rules of this paragraph, it shall be stayed as a flat surface according to the rules of Par. UG-47 for braced and stayed flat plates.

(j) The inside crown radius to which an unstayed head is dished shall be not greater than the outside diameter of the skirt of the head. The inside knuckle radius of a torispherical head shall be not less than 6 per cent of the outside diameter of the skirt of the head but in no case less than 3 times the head thickness.

(k) A dished head with a reversed skirt may be used in a pressure vessel provided the maximum allowable working pressure for the head is established in accordance with the requirements of Par. UG-101.

(l) Ellipsoidal, torispherical, and toriconical heads, concave to pressure, intended for welded attachment, shall have a skirt length sufficient to meet the requirements of Fig. UW-13.1, for the respective types of joint shown therein.

(m) Heads concave to pressure, intended for attachment by riveting or brazing, shall have a skirt length sufficient to meet the requirements for circumferential joints in Part UR and Part UB, respectively.

(n) A head for a cylindrical shell may be built up of several head shapes, the thicknesses of which satisfy the requirements of the appropriate formulas above, provided that adjoining shapes are so formed that they have a common tangent transverse to the joint. Any taper at a welded joint, as required by Par. UW-9 (c), shall be within the boundary of the shape having the thinner wall.

(o) Dished heads of full hemispherical shape, concave to pressure, intended for butt-welded attachment, need not have an integral skirt, but where one is provided, the thickness of the skirt shall be at least that required for a seamless shell of the same diameter.

(p) If a torispherical, ellipsoidal, or hemispherical head is formed with a flattened spot or surface, the diameter of the flat spot shall not exceed that permitted for flat heads as given by the formula in Par. UG-34, using $C = 0.25$.

(q) Openings in formed heads under internal pressure shall comply with the requirements of Pars. UG-36 through UG-46.

(r) A stayed jacket that completely covers a formed inner head of any of the types included in this paragraph shall also meet the requirements of Par. UG-47 (c)

UG-33 Formed Heads, Pressure on Convex Side

(a) The required thickness at the thinnest point after forming of ellipsoidal or torispherical heads under pressure on the convex side (minus heads) shall be the greater of the following thicknesses:

(1) The thickness as computed by the procedure given in Par. UG-32 for heads with the pressure on the concave side (plus heads) using a design pressure 1.67 times the external design pressure, assuming the joint efficiency $E = 1.00$ for all cases; or

(2) The thickness as computed by the appropriate procedure given in (d) or (e).

When checking an existing design of an ellipsoidal or torispherical head to determine its maximum allowable working pressure, this pressure shall be determined by reversing the procedures in (1) and (2) above and using the smaller value obtained.

The required thickness of hemispherical heads under pressure on the convex side shall be determined by the rules given in (c).

The required thickness of conical heads under pressure on the convex side shall be determined by the rules given in (f).

In addition, provision shall be made for any other loadings given in Par. UG-22. Fig. UA-4 shows principal dimensions of typical heads. (See note 1, Par. UG-32 (a).)

(b) The notations defined below are used in the formulas of this paragraph:

t_h = minimum required thickness of head after forming, exclusive of corrosion allowance, inches,

P = external design pressure, pounds per square inch (see Par. UG-28 (e) and (f)), (maximum allowable working pressure for a vessel in its operating position),

L_1 = for hemispherical heads, the inside radius, inches;
for ellipsoidal heads, the equivalent inside spherical radius taken as $K_1 D_o$, inches;
for torispherical heads, the inside radius of the crown portion of the head, inches,

D_o = outside diameter of the head skirt; or the outside diameter of a cone head at the point under consideration, measured perpendicular to the longitudinal axis of the cone, inches (see (f)),

K_1 = a factor depending upon the ellipsoidal head proportions, given in Table UG-37.

(c) *Hemispherical Heads* The required thickness of a hemispherical head having pressure on the convex side shall be determined in the same manner as outlined in Par. UG-28 (d) for determining the thickness for a spherical shell. An example illustrating the use of this procedure is given in Appendix L (Par. UA-276 (c)).

(d) *Ellipsoidal Heads* The required thickness of an ellipsoidal head having pressure on the convex side, either seamless or of built-up construction with butt joints, shall not be less than that determined by the following procedure:

Step 1: Assume a value for t_h. Determine the ratios $L_1/100t_h$ and L_1/t_h.

Step 2: Enter the left-hand side of the chart in Appendix V for the material under consideration with the value of $L_1/100t_h$ determined in Step 1.

Step 3: Move horizontally to the line marked Sphere Line.

Step 4: From this intersection move vertically to the material line for the design temperature (see Par. UG-20). (For intermediate temperatures, interpolations may be made between the lines on the chart.)

Step 5: From this intersection move horizontally to the right and read the value of B.

Step 6: Compute the maximum allowable working pressure P_a by the following formula:

$$P_a = \frac{B}{L_1/t_h}$$

Step 7: Compare P_a with P. If P_a is smaller than P, a greater value for t_h must be selected and the design procedure repeated until a value for P_a is obtained that is equal to or greater than P. An example illustrating the use of this procedure is given in Appendix L (Par. UA-276 (a)).

(e) *Torispherical Heads* The required thickness of a torispherical head having pressure on the convex side, either seamless or of built-up construction with butt joints, shall not be less than that determined by the same design procedure as is used for ellipsoidal heads given in (d), using the appropriate value for L_1. An example illustrating the use of this procedure is given in Appendix L (Par. UA-276 (b)).

(f) *Conical Heads* The required thickness of a conical head under pressure on the convex side, either seamless or of built-up construction with butt joints, shall not be less than that determined by the following rules:

(1) When one-half of the included (apex) angle of the cone is equal to or less than 22½ deg, the thickness of the cone shall be the same as the required thickness of a cylindrical shell, the length of which equals the axial length of the cone or the axial distance center to center of stiffening rings (if used), and the outside diameter of which is equal to the outside diameter at the large end of the cone or section between stiffening rings (see Par. UG-28 (c)). An example illustrating the use of this procedure is given in Appendix L (Par. UA-276 (d)).

(2) When one-half of the included (apex) angle of the cone is greater than 22½ deg and less than 60 deg, the thickness of the cone shall be the same as the required thickness of a cylindrical shell, the outside diameter of which equals the largest inside diameter of the cone measured perpendicularly to the cone axis, and the length of which equals an axial length that is the least of either the distance center to center of stiffening rings (if used) or the largest inside diameter of the section of cone considered (see Par. UG-28 (c)).

(3) When one-half of the included (apex) angle of the cone is greater than 60 deg, the thickness of the cone shall be the same as the required thickness for a flat head under external pressure, the diameter of which equals the largest inside diameter of the cone (see Par. UG-34).

(g) When lap joints are used in formed head construction or for longitudinal joints in a conical head under external pressure, the thickness shall be determined by the rules in this paragraph, except that $2P$ shall be used instead of P in the calculations for the required thickness.

(h) The required length of skirt on heads convex to pressure shall comply with the provisions of Par. UG-32 (l), (m), and (o) for heads concave to pressure.

(i) Openings in heads convex to pressure shall comply with the requirements of Pars. UG-36 through UG-46.

UG-34 Unstayed Flat Heads and Covers

(a) The minimum thickness of unstayed flat heads, cover plates and blind flanges shall conform to the requirements given in this paragraph. These requirements apply to both circular and non-circular[1] heads and covers. Some acceptable types of flat heads and covers are shown in Fig. UG-34. In this figure, the dimensions of the component parts, and the dimensions of the welds, are exclusive of extra metal required for corrosion allowance.

(b) The notations used in this paragraph and in Fig. UG-34 are defined as follows:

C = a factor depending upon the method of attachment of head, shell dimensions,

[1] Special consideration shall be given to the design of shells, nozzle necks or flanges to which noncircular heads or covers are attached (see Par. U-2 (c)).

and other items as listed in (d) below, dimensionless.

D = long span of noncircular heads or covers measured perpendicular to short span, inches.

d = diameter, or short span, measured as indicated in Fig. UG-34, inches.

h_G = gasket moment arm, equal to the radial distance from the center line of the bolts to the line of the gasket reaction, as shown in Table UA-49.2, inches.

L = perimeter of noncircular bolted head measured along the centers of the bolt holes, inches.

l = length of flange of flanged heads, measured from the tangent line of knuckle, as indicated in Fig. UG-34(a) and (c), inches.

m = the ratio $\frac{t_r}{t_s}$, dimensionless.

P = design pressure (see Par. UA-60(b)), pounds per square inch.

r = inside corner radius on a head formed by flanging or forging, inches.

S = maximum allowable stress value, pounds per square inch, from applicable table of stress values in Subsection C.

t = minimum required thickness of flat head or cover, exclusive of corrosion allowance, inches.

t_e = minimum distance from beveled end of vessel, before welding, to outer face of head, as indicated in Fig. UG-34(h) and (i), inches.

t_f = actual thickness of the flange on a forged head, at the large end, exclusive of corrosion allowance, as indicated in Fig. UG-34(b), inches.

t_h = actual thickness of flat head or cover, exclusive of corrosion allowance, inches.

t_r = required thickness of seamless shell, for pressure, inches.

t_s = actual thickness of shell, exclusive of corrosion allowance, inches.

t_w = thickness through the weld joining the edge of a head to the inside of a vessel, as indicated in Fig. UG-34(g), inches.

t_1 = throat dimension of the closure weld, as indicated in Fig. UG-34(r), inches.

W = total bolt load, pounds, given for circular heads for Formulas (3) and (4), Par. UA-49(c), Appendix II.

Z = a factor of noncircular heads and covers that depends on the ratio of short span to long span, as given in (c) below, dimensionless.

(c) The thickness of flat unstayed heads, covers, and blind flanges shall conform to one of the following three requirements:[1]

(1) Circular blind flanges of ferrous materials conforming to USAS-B16.5–1961 shall be acceptable for the diameters and pressure-temperature ratings in Tables 2 to 8 of that Standard, when of the types shown in Fig. UG-34(j) and (k).

(2) The minimum required thickness of flat unstayed circular heads, covers and blind flanges shall be calculated by the following formula:

$$t = d\sqrt{CP/S} \qquad (1)$$

except when the head, cover or blind flange is attached by bolts causing an edge moment (Fig. (j) and (k)), in which case the thickness shall be calculated by

$$t = d\sqrt{CP/S + 1.78Wh_G/Sd^3} \qquad (2)$$

When using Formula (2), the thickness t shall be calculated for both operating conditions and gasket seating, and the greater of the two values shall be used. For operating conditions, the value of P shall be the design pressure, and the values of S at the design temperature and W from Formula (3) of Par. UA-49(c) shall be used. For gasket seating, P equals zero, and the values of S at atmospheric temperature and W from Formula (4) of Par. UA-49(c) shall be used.

(3) Flat unstayed heads, covers, or blind flanges may be square, rectangular, elliptical, obround, segmental, or otherwise noncircular. Their required thickness shall be calculated by the following formula:

$$t = d\sqrt{ZCP/S} \qquad (3)$$

where

$$Z = 3.4 - \frac{2.4d}{D} \qquad (4)$$

with the limitation that Z need not be greater than two and one half (2.5).

Formula (3) does not apply to noncircular heads, covers, or blind flanges attached by bolts causing a bolt edge moment (Fig. (j) and (k)). For noncircular heads of this type, the required thickness shall be calculated by the following formula:

$$t = d\sqrt{ZCP/S + 6Wh_G/SLd^2} \qquad (5)$$

When using Formula (5), the thickness t shall be calculated in the same way as specified above for Formula (2).

[1] The formulas provide safe construction as far as stress is concerned. Greater thicknesses may be necessary if deflection would cause leakage at threaded or gasketed joints.

(d) For the types of construction shown in Fig. UG-34, the minimum values of C to be used in Formulas (1), (2), (3), and (5) are:

Fig. (a) $C = 0.25$ for flanged circular and noncircular heads forged integral with or butt-welded to the vessel with an inside corner radius not less than three times the required head thickness, with no special requirement with regard to length of flange, and where the welding meets all the requirements for circumferential joints given in Part UW.

$C = 0.15$ for circular heads, when the flange length for heads of the above design is not less than

$$l = \left(1.1 - 0.8\frac{t_s^2}{t_h^2}\right)\sqrt{dt_h} \qquad (6)$$

$C = 0.15$ for circular heads, when the flange length l is less than the requirement in Formula (6) but the shell thickness is not less than

$$t_s = 1.12t_h\sqrt{1.1 - l/\sqrt{dt_h}} \qquad (7)$$

for a length of at least $2\sqrt{dt_s}$.

When $C = 0.15$ is used, the taper shall be 1:4.

Fig. (b-1) $C = 0.25$ for forged circular and noncircular heads integral with or butt-welded to the vessel, where the flange thickness is not less than two times the shell thickness, the corner radius on the inside is not less than three times the flange thickness, and the welding meets all the requirements for circumferential joints given in part UW.

Fig. (b-2) $C = 0.5m$ but not less than 0.3 for forged circular and noncircular heads integral with or butt-welded to the vessel, where the flange thickness is not less than the shell thickness, the corner radius on the inside is not less than 1.5 times the flange thickness, and the welding meets all the requirements for circumferential joints given in Part UW. (See Fig. UW-13.3(a) and (b) for the special case where t_f equals t_s.)

Fig. (c) $C = 0.20$ for circular heads lap-welded or brazed to the shell with corner radius not less than $3t$ and l not less than required by Formula (6) and the requirements of Par. UW-13 are met.

$C = 0.30$ for circular and noncircular lap-welded or brazed construction as above, but with no special requirement with regard to l.

$C = 0.30$ for circular and noncircular riveted construction with corner radius not less than $3t$ and also meeting the requirements of Pars. UR-17 and UR-18.

$C = 0.30$ for circular flanged plates screwed over the end of the vessel, with inside corner radius not less than $3t$, in which the design of the threaded joint against failure by shear, tension, or compression, resulting from the end force due to pressure, is based on a factor of safety of at least 4, and the threaded parts are at least as strong as the threads for standard piping of the same diameter. Seal welding may be used, if desired.

Fig. (d) $C = 0.20$ for integral flat circular heads when the dimension d does not exceed 24 inches, the ratio of thickness of the head to the dimension d is not less than 0.05 nor greater than 0.25, the head thickness t_h is not less than the shell thickness t_s, the inside corner radius is not less than $0.25\,t$, and the construction is obtained by special techniques of upsetting and spinning the end of the shell, such as employed in closing header ends.

Figs. (e), (f), and (g) $C = 0.5m$ but not less than 0.3 for circular plates, welded to the inside of a vessel, and otherwise meeting the requirements for the respective types of welded vessels. If a value of m less than 1 is used in calculating t, the shell thickness t_s shall be maintained along a distance inwardly from the inside face of the head equal to at least $2\sqrt{dt_s}$. The throat thickness of the fillet welds in Figs. (e) and (f) shall be at least $0.7t_s$. The size of the weld t_w in Fig. (g) shall be not less than two times the required thickness of a seamless shell nor less than 1.25 times the nominal shell thickness but need not be greater than the head thickness; the weld shall be deposited in a welding groove with the root of the weld at the inner face of the head as shown in the figure.

$C = 0.5$ for noncircular plates, welded to the inside of a vessel and otherwise meeting the requirements for the respective types of welded vessels. The throat thickness of the fillet welds in Figs. (e) and (f) shall be at least $0.7t_s$. The size of the weld t_w in Fig. (g) shall be not less than two times the required thickness of a seamless shell nor less than 1.25 times the nominal shell thickness but need not be greater than the head thickness; the weld shall be deposited in a welding groove with the root of the weld at the inner face of the head as shown in the figure.

Fig. (h) $C = 0.5$ for circular plates welded to the end of the shell when t_s is at least $1.25t_r$ and the weld details conform to the requirements of Par. UW-13(e) and Fig. UW-13.2(a) to (g) inclusive. See also Par. UG-93(b)(3).

Fig. (i) $C = 0.5m$ but not less than 0.3 for circular plates if an inside fillet weld with minimum throat thickness of $0.7t_s$ is used and the details of the outside weld conform to the requirements of Par. UW-13(e) and Fig. UW-13.2(a) to (g)

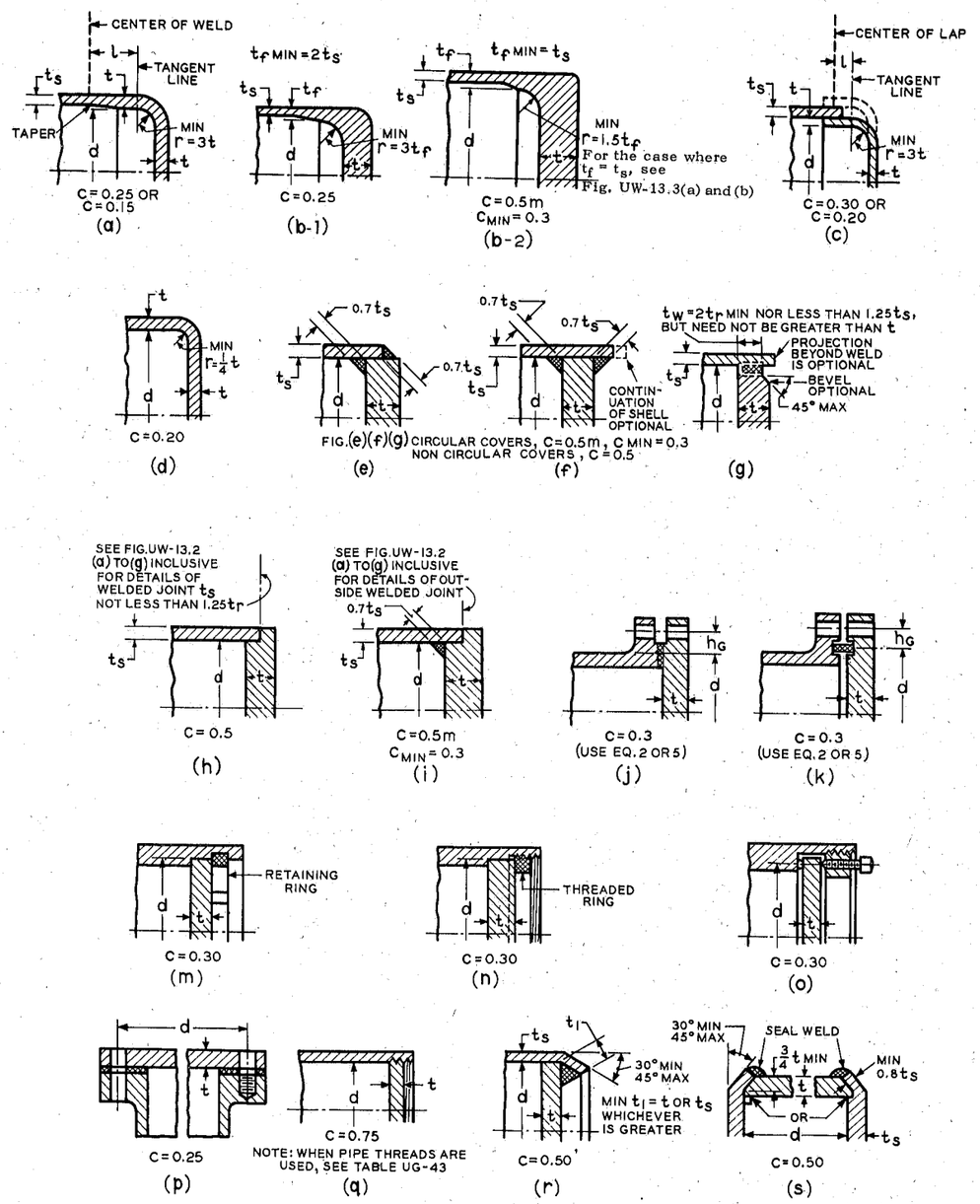

FIG. UG-34 SOME ACCEPTABLE TYPES OF UNSTAYED FLAT HEADS AND COVERS
The above illustrations are diagrammatic only. Other designs that meet the requirements of Par. UG-34 are acceptable.

inclusive, in which the inside weld can be considered to contribute an amount equal to t_s to the sum of the dimensions a and b. See also Par. UG-93 (b) (3).

Figs. (j) and (k) $C = 0.3$ for circular and noncircular heads and covers bolted to the vessel as indicated in the figures. Note that Formula (2) or (5) shall be used because of the extra moment applied to the cover by the bolting.

When the cover plate is grooved for a peripheral gasket, as shown in (k), the net cover plate thickness under the groove or between the groove and the outer edge of the cover plate shall be not less than

$$d\sqrt{1.78Wh_G/Sd^3}$$

for circular heads and covers, nor less than

$$d\sqrt{6Wh_G/SLd^2}$$

for noncircular heads and covers.

Figs. (m), (n), and (o) $C = 0.3$ for a circular plate inserted into the end of a vessel and held in place by a positive mechanical locking arrangement, and when all possible means of failure (either by shear, tension, compression, or radial deformation, including flaring, resulting from pressure and differential thermal expansion) are resisted with a factor of safety of at least 4. Seal welding may be used, if desired.

Fig. (p) $C = 0.25$ for circular and noncircular covers riveted, or bolted with a full-face gasket, to shells, flanges or side plates.

Fig. (q) $C = 0.75$ for circular plates screwed into the end of a vessel having an inside diameter d not exceeding 12 in.; or for heads having an integral flange screwed over the end of a vessel having an inside diameter d not exceeding 12 in.; and when the design of the threaded joint, against failure by shear, tension, compression, or radial deformation, including flaring, resulting from pressure and differential thermal expansion, is based on a factor of safety of at least 4. If a tapered pipe thread is used, the requirements of Table UG-43 shall also be met. Seal welding may be used, if desired.

Fig. (r) $C = 0.50$ for circular plates having a dimension d not exceeding 18 in. inserted into the vessel as shown and otherwise meeting the requirements for the respective types of welded vessels. The end of the vessel shall be crimped over at least 30 deg, but not more than 45 deg. The crimping may be done cold only when this operation will not injure the metal. The throat of the weld shall be not less than the thickness of the flat head of shell, whichever is greater.

Fig. (s) $C = 0.50$ for circular beveled plates having a diameter d not exceeding 18 in., inserted into a vessel, the end of which is crimped over at least 30 deg, but not more than 45 deg, and when the undercutting for seating leaves at least 80 per cent of the shell thickness. The beveling shall be not less than 75 per cent of the head thickness. The crimping shall be done when the entire circumference of the cylinder is uniformly heated to the proper forging temperature for the material used. For this construction, the ratio t_s/d shall be not less than the ratio P/S nor less than 0.05. The maximum allowable pressure for this construction shall not exceed $P = S/5d$.

UG-35 Other Types of Closures

(a) *Spherical Dished Covers* Rules for the design of circular spherically dished heads with bolting flanges are given in Par. UA-6.

(b) *Quick-Actuating Closures (Quick-Opening Closures)* Closures other than the multibolted type designed to provide access to the contents space of a pressure vessel shall have the locking mechanism or locking device so designed that failure of any one locking element or component in the locking mechanism cannot result in the failure of all other locking elements and the release of the closure. Quick-Actuating Closures shall be so designed and installed that it may be determined by visual external observation that the holding elements are in good condition and that their locking elements, when the closure is in the closed position, are in full engagement.

Quick-Actuating Closures that are held in position by positive locking devices and that are fully released by partial rotation or limited movement of the closure itself or the locking mechanism and any closure that is other than manually operated shall be so designed that when the vessel is installed the following conditions are met:

(1) The closure and its holding elements are fully engaged in their intended operating position before pressure can be built up in the vessel.

(2) Pressure tending to force the closure clear of the vessel will be released before the closure can be fully opened for access.

(3) In the event that compliance with (1) and (2) is not inherent in the design of the closure and its holding elements, provision shall be made so that devices to accomplish this can be added when the vessel is installed.

It is recognized that it is impractical to write detailed requirements to cover the multiplicity of devices used for quick access, or to prevent negligent operation or the circumventing of safety devices. Any device or devices which will provide the safeguards broadly described in (1), (2), and

(3) will meet the intent of this Division.

Quick-Actuating Closures that are held in position by a locking device or mechanism that requires manual operation and are so designed that there will be leakage of the contents of the vessel prior to disengagement of the locking elements and release of closure need not satisfy Pars. (1), (2), and (3), but such closures shall be equipped with an audible and/or visible warning device that will serve to warn the operator if pressure is applied to the vessel before the closure and its holding elements are fully engaged in their intended position and further will serve to warn the operator if an attempt is made to operate the locking mechanism or device before the pressure within the vessel is released.

When installed, all vessels having quick-actuating closures shall be provided with a pressure indicating device visible from the operating area.

OPENINGS AND REINFORCEMENTS[1]

(Typical Examples of the application of these Rules are given in Appendix L)

UG-36 Openings in Pressure Vessels

(a) *Shape of Openings*[2]

(1) Openings in cylindrical or conical portions of vessels, or in formed heads, shall preferably be circular, elliptical or obround.[3] When the long dimension of an elliptical or obround opening exceeds twice the short dimensions, the reinforcement across the short dimensions shall be increased as necessary to provide against excessive distortion due to twisting moment.

(2) Openings may be of other shapes than those given in (1), and all corners shall be provided with a suitable radius. When the openings are of such proportions that their strength cannot be computed with assurance of accuracy, or when doubt exists as to the safety of a vessel with such openings, the part of the vessel affected shall be subjected to a proof hydrostatic test as prescribed in Par. UG-101.

[1] The rules governing openings as given in this Division are based on the stress intensification created by the existence of a hole in an otherwise symmetrical section. They are based on experience with vessels designed with safety factors of 4 and 5 applied to the ultimate strength of the shell material. External loadings such as those due to the thermal expansion or unsupported weight of connecting piping have not been evaluated. These factors should be given attention in unusual designs or under conditions of cyclic loading.

[2] The opening made by a pipe or a circular nozzle, the axis of which is not perpendicular to the vessel wall or head, may be considered an elliptical opening for design purposes.

[3] An obround opening is one which is formed by two parallel sides and semicircular ends.

(b) *Size of Openings*

(1) Properly reinforced openings in cylindrical and spherical shells are not limited as to size and shall comply with the provisions which follow, and with the additional provisions of Par. UA-7.

(2) Properly reinforced openings in formed heads need not be limited as to size, but, when the opening in the end closure of a cylinder is larger than one half the inside diameter of the shell, it is recommended that the closure be made by a reversed-curve section as shown in sketches *(c)* and *(d)* in Fig. UG-36, or by a conical section or a cone with a knuckle radius at the large end as shown in sketches *(a)* and *(b)* of Fig. UG-36 and/or with a flare radius at the small end. The design shall comply with all the requirements of the rules for reducer sections (see Par. (e)) in so far as these rules are applicable.

(c) *Strength and Design of Finished Openings*

(1) All references to dimensions in this and succeeding paragraphs apply to the finished construction after deduction has been made for material added as corrosion allowance. For design purposes, no metal added as corrosion allowance may be considered as reinforcement.

(2) All openings shall be reinforced to satisfy the requirements of Par. UG-37, except as given in (3) below.

(3) Single openings in vessels not subject to rapid fluctuations in pressure do not require reinforcement other than that inherent in the construction under the following conditions:

(a) Welded or brazed connections attached in accordance with the applicable rules and not larger than:

3 in. pipe size – in vessel shells or heads ⅜ in. or less.

2 in. pipe size – in vessel shells or heads over ⅜ in.

(b) Threaded, studded, or expanded connections in which the hole cut in the shell or head is not greater than 2 in. pipe size.

(d) *Openings Through Welded Joints* Additional provisions governing openings through welded joints are given in Par. UW-14.

(e) *Reducer Sections Under Internal Pressure*

(1) The formulas and rules of this paragraph apply to concentric reducer sections wherein all the longitudinal loads are transmitted wholly through the shell of the reducer. Where loads are transmitted in part or as a whole by other elements, e.g., inner shells, stays, or tubes, the rules of this paragraph do not apply.

(2) The thickness of each element of a reducer, as defined in (4) below, under internal pressure shall not be less than that computed by

the applicable formula. In addition, provisions shall be made for any of the other loadings listed in Par. UG-22, when such loadings are expected.

(3) The notations defined in either Par. UG-32(c) or below are used in this paragraph (see Fig. UG-36).

t = minimum required thickness of the considered element of a reducer after forming, exclusive of corrosion allowance, inches,

R_L = inside radius of larger cylinder, inches,

R_s = inside radius of smaller cylinder, inches,

r_L = inside radius of knuckle at larger cylinder, inches,

α = one half of the included (apex) angle of a conical element, degrees,

r_s = radius to the inside surface of flare at the small end, inches.

(4) *Elements of a Reducer* A transition section reducer consisting of one or more elements may be used to join two cylindrical shell sections of different diameters but with a common axis provided the requirements of this paragraph are met:

(a) Conical Shell Section The required thickness of a conical shell section, or the allowable working pressure for such a section of given thickness, shall be determined by the formulas given in Par. UG-32(g).

(b) Knuckle Tangent to the Larger Cylinder Where a knuckle is used at the large end of a reducer section, its shape shall be that of a portion of an ellipsoidal, hemispherical, or torispherical head. The thickness and other dimensions shall satisfy the requirements of the appropriate formulas and provisions of Par. UG-32.

(5) *Combination of Elements to Form a Reducer* When elements of subsection (4), above, having different thicknesses are combined to form a reducer, the joints including the plate taper required by Par. UW-9(c) shall lie entirely within the limits of the thinner element being joined.

(a) A reducer may be a simple conical shell section, Fig. UG-36*(a)*, without knuckle, provided the half-apex angle α is not greater than 30 degrees, except as provided for in Par. UA-5(e). A reinforcement ring shall be provided at either or both ends of the reducer when required by the rules of Par. UA-5.

(b) A toriconical reducer, Fig. UG-36*(b)*, may be shaped as a portion of a toriconical head, Par. UG-32(h), a portion of a hemispherical head plus a conical section, or a portion of an ellipsoidal head plus a conical section, provided the half-apex angle α is not greater than 30 degrees, except as provided for in Par. UA-5(e). A reinforcement ring shall be provided at the small end of the conical reducer element when required by the rules in Par. UA-5.

(c) Reverse curve reducers, Fig. UG-36*(c)* and *(d)* may be shaped of elements other than those of Par. UG-36(e)(4). See Par. U-2(c).

UG-37 Reinforcement Required for Openings in Shells and Formed Heads

(a) *General* The rules in this paragraph apply to all openings other than:

(1) Small openings covered by Par. UG-36(c)(3).

(2) Openings in flat heads covered by Par. UG-39.

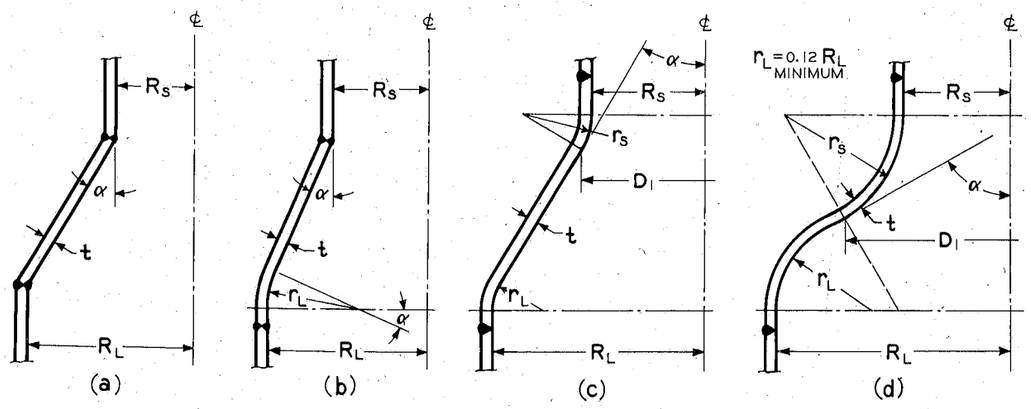

FIG. UG-36 LARGE HEAD OPENINGS – REVERSE-CURVE AND CONICAL SHELL-REDUCER SECTIONS

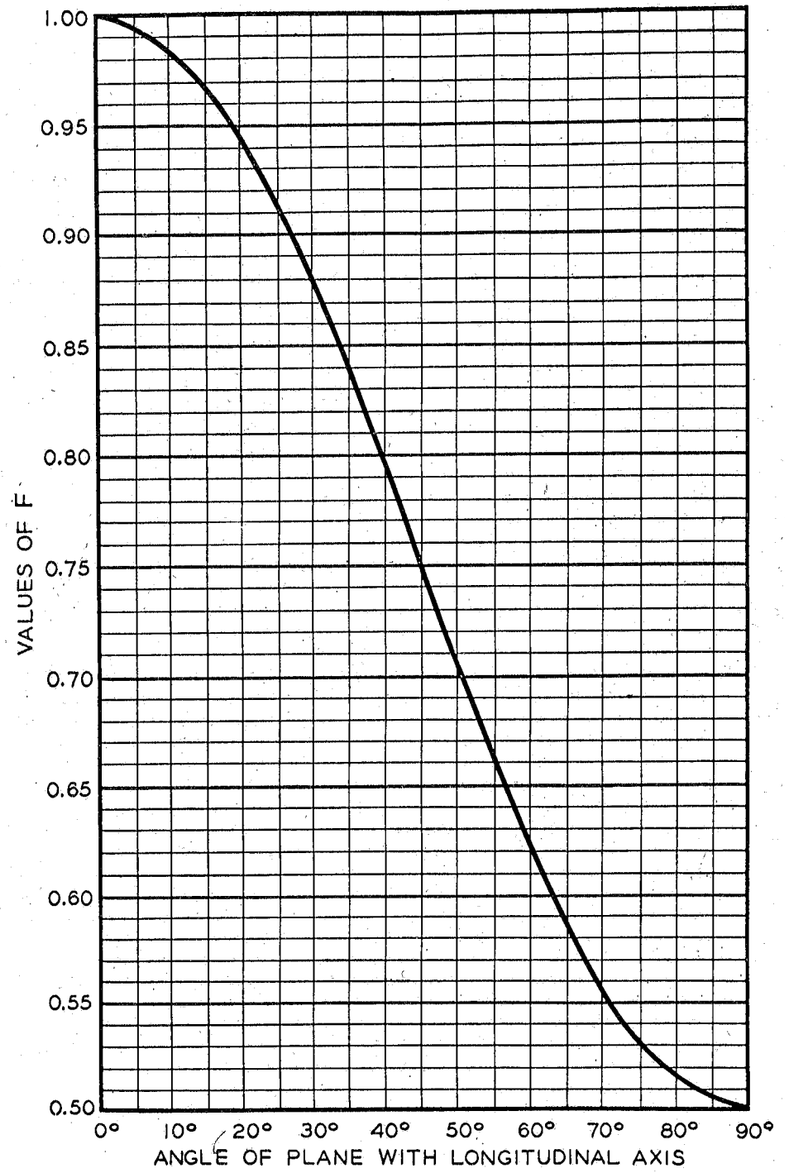

FIG. UG-37 CHART FOR DETERMINING VALUE OF F, AS REQUIRED IN PAR. UG-37.

(3) Openings designed as reducer sections covered by Par. UG-36 (e).

(4) Large head openings covered by Par. UG-36 (b) (2).

(5) Tube holes with ligaments between them conforming to the rules of Par. UG-53.

Reinforcement shall be provided in amount and distribution such that the area requirements for reinforcement are satisfied for all planes through the center of the opening and normal to the vessel surface. For a circular opening in a cylindrical shell, the plane containing the axis of the shell is the plane of greatest loading due to pressure.

(b) *Design for Internal Pressure* The total cross-sectional area of reinforcement, A, required in any given plane for a vessel under internal pressure shall be not less than

$$A = d \times t_r \times F$$

where d = the diameter in the given plane of the finished opening in its corroded condition, inches,

F = a correction factor which compensates for the variation in pressure stresses on different planes with respect to the axis of a vessel. A value of 1.00 shall be used for all configurations except that Fig. UG-37 may be used for integrally reinforced openings in cylindrical shells and cones.

t_r = the required thickness of a seamless shell or head computed by the rules of this Division for the designated pressure, inches, except that:

(1) When the opening and its reinforcement are entirely within the spherical portion of a torispherical head, t_r is the thickness required by Par. UA-4 (d) using $E = 1$ and $M = 1$;

(2) When the opening is in a cone, t_r is the thickness required for a seamless cone of diameter D measured where the nozzle axis pierces the inside wall of the cone;

(3) When the opening and its reinforcement are in an ellipsoidal head and are located entirely within a circle the center of which coincides with the center of the head and the diameter of which is equal to 80 per cent of the shell diameter, t_r is the thickness required for a seamless sphere of radius K_1D, where D is the shell diameter and K_1 is given by Table UG-37.

(4) When the opening is in a vessel built under Par. UW-12 (c), the value of S used in computing t_r shall be 80 per cent of the allowable stress value prescribed for the material in subsection C.

TABLE UG-37
VALUES OF SPHERICAL RADIUS FACTOR K_1

(Equivalent Spherical Radius = K_1D; $D/2h$ = axis ratio. For definitions see Par. UA-4 (b). Interpolation permitted for intermediate values.)

$\frac{D}{2h}$		3.0	2.8	2.6	2.4	2.2
K_1		1.36	1.27	1.18	1.08	0.99
$\frac{D}{2h}$	2.0	1.8	1.6	1.4	1.2	1.0
K_1	0.90	0.81	0.73	0.65	0.57	0.50

(c) *Design for External Pressure*

(1) The reinforcement required for openings in single-walled vessels subject to external pressure need be only 50 per cent of that required in (b) where t_r is the wall thickness required by the rules for vessels under external pressure.

(2) The reinforcement required for openings in each shell of a multiple-walled vessel shall comply with (1) when the shell is subject to external pressure, and with (b) when the shell is subject to internal pressure, regardless of whether or not there is a common nozzle secured to more than one shell by strength welds.

(d) *Design for Alternate Internal and External Pressure* Reinforcement of vessels subject to alternate internal and external pressures shall meet the requirements of (b) for internal pressure and of (c) for external pressure.

UG-38 Flue Openings in Formed Heads

(a) Flued openings in formed heads made by inward or outward forming of the head plate shall meet the requirements for reinforcement in Par. UG-37.

(b) The minimum depth of flange of a flued opening exceeding 6 in. in any inside dimension, when not stayed by an attached pipe or flue, shall equal $3t_r$ or $(t_r + 3)$ in., whichever is less, where t_r is the required head thickness. The depth of flange shall be determined by placing a straightedge across the side opposite the flued opening along the major axis and measuring from the straightedge to the edge of the flanged opening (see Fig. UG-38).

(c) The minimum width of bearing surface for a gasket on a self-sealing flued opening shall be in accordance with Par. UG-46 (j).

UG-39 Reinforcement Required for Openings in Flat Heads

(a) *General* The rules in this paragraph apply

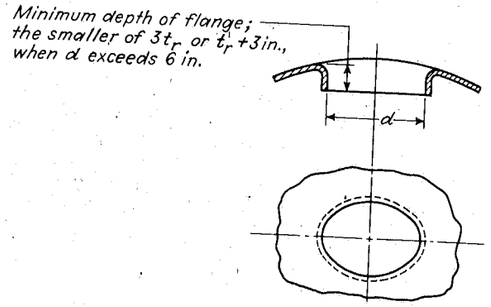

FIG. UG-38 MINIMUM DEPTH FOR FLANGE OF FLUED OPENINGS

to all openings other than small openings covered by Par. UG-36(c)(3).

(b) Flat heads that have an opening with a diameter that does not exceed one-half of the head diameter or shortest span, as defined in Par. UG-34, shall have a total cross-sectional area of reinforcement not less than that given by the formula

$$A = 0.5d \times t$$

where d is defined in Par. UG-37 and t in Par. UG-34.

(c) Flat heads that have an opening with a diameter that exceeds one-half of the head diameter or shortest span, as defined in Par. UG-34, shall be designed as a flange in accordance with the *Rules for Bolted Flange Connections* given in Appendix II.

(d) As an alternative to (b), the thickness of flat heads may be increased to provide the necessary opening reinforcement as follows:

(1) In Formula (1) or (3) of Par. UG-34(c), by using 2C or 0.75 in place of C, whichever is less.

(2) In Formula (2) or (5) of Par. UG-34(c), by doubling the quantity under the square root sign.

UG-40 Limits of Reinforcement

(a) The boundaries of the cross-sectional area in any plane normal to the vessel wall and passing through the center of the opening within which metal must be located in order to have value as reinforcement are designated as the limits of reinforcement for that plane.

(b) The limits of reinforcement, measured parallel to the vessel wall, shall be at a distance, on each side of the axis of the opening, equal to the greater of the following:

(1) The diameter of the finished opening in the corroded condition.

(2) The radius of the finished opening in the corroded condition plus the thickness of the vessel wall, plus the thickness of the nozzle wall.

(c) The limits of reinforcement, measured normal to the vessel wall, shall conform to the contour of the surface at a distance from each surface equal to the smaller of the following:

(1) 2½ times the nominal shell thickness less corrosion allowance,

(2) 2½ times the nozzle-wall thickness less corrosion allowance, plus the thickness of any added reinforcement exclusive of weld metal on the side of the shell under consideration.

(d) Metal within the limits of reinforcement that may be considered to have reinforcing value shall include the following:

(1) Metal in the vessel wall over and above the thickness required to resist pressure and the thickness specified as corrosion allowance. The area in the vessel wall available as reinforcement is the larger of the values of A_1 given by the formulas

$$A_1 = (E_1 t - F t_r) d$$

or

$$A_1 = 2(E_1 t - F t_r)(t + t_n)$$

(2) Metal over and above the thickness required to resist pressure and the thickness specified as corrosion allowance in that part of a nozzle wall extending outside the vessel wall. The maximum area in the nozzle wall available as reinforcement is the smaller of the values of A_2 given by the formulas

$$A_2 = (t_n - t_{rn})\, 5t$$

or

$$A_2 = (t_n - t_{rn})\, (5t_n + 2t_e)$$

All metal in the nozzle wall extending inside the vessel wall may be included after proper deduction for corrosion allowance on all the exposed surface is made. No allowance shall be taken for the fact that a differential pressure on an inwardly extending nozzle may cause opposing stress to that of the stress in the shell around the opening.

Where

A_1 = area in excess thickness in the vessel wall available for reinforcement, square inches. (See Fig. UA-280 and Par. UG-40);

A_2 = area in excess thickness in the nozzle wall available for reinforcement, square inches. (See Fig. UA-280 and Par. UG-40);

E_1 = 1 when an opening is in the plate or when the opening passes through a circumferential joint in a shell or cone (exclusive of head-to-shell joints); or

E_1 = the joint efficiency obtained from Table UW-12 when any part of the opening passes through any other welded joint;

F = a correction factor which compensates for the variation in pressure stresses on different planes with respect to the axis of a vessel. A value of 1.00 shall be used for all configurations except that Fig. UG-37 may be used for integrally reinforced openings in cylindrical shells and cones.

t_e = thickness or height of reinforcing element, inches (See Fig. UW-16.1).

t = nominal thickness of the vessel wall, less corrosion allowance, inches;

t_r = required thickness of a seamless shell or head as defined in Par. UG-37, inches:

t_n = nominal thickness of nozzle wall, less corrosion allowance, inches;

t_{rn} = required thickness of a seamless nozzle wall, inches;

d = diameter in the plane under consideration of the finished opening in its corroded condition, inches. (See Par. UG-37(b) and Fig. UW-16.1).

(3) Metal added as reinforcement, and metal in attachment welds.

UG-41 Strength of Reinforcement

(a) Material used for reinforcement shall have an allowable stress value equal to or greater than that of the material in the vessel wall, except that when such material is not available, lower strength material may be used, provided the area of reinforcement is increased in inverse proportion to the ratio of the allowable stress values of the two materials to compensate for the lower allowable stress value of the reinforcement. No credit may be taken for the additional strength of any reinforcement having a higher allowable stress value than that of the vessel wall. Deposited weld metal outside of either the vessel wall or any reinforcing pad used as reinforcement shall be credited with an allowable stress value equivalent to the weaker of the materials connected by the weld. Vessel-to-nozzle or pad-to-nozzle attachment weld metal within the vessel wall or within the pad may be credited with a stress value equal to that of the vessel wall or pad respectively.

(b) On each side of the plane defined in Par. UG-40(a), the strength of the attachment joining the vessel wall and reinforcement or any two parts of the attached reinforcement shall be at least equal to the smaller of:

(1) The strength in tension of the cross section of the element of reinforcement being considered, or

(2) The strength in tension of the area defined in Par. UG-37 less the strength in tension of the reinforcing area which is integral in the vessel wall as permitted by Par. UG-40(d)(1).

(c) The strength of the attachment joint shall be considered for its entire length on each side of the plane of the area of reinforcement defined in Par. UG-40. For obround openings, consideration shall also be given to the strength of the attachment joint on one side of the plane transverse to the parallel sides of the opening which passes through the center of the semicircular end of the opening.

(d) For detailed requirements for welded, brazed, and riveted reinforcement see the appropriate paragraphs in the Parts devoted to these subjects (see Pars. UW-15, UR-25, and UB-19).

UG-42 Reinforcement of Multiple Openings

(a) When any two adjacent openings are spaced at less than two times their average diameter so that their limits of reinforcement overlap, the two openings (or similarly for any larger group of openings) shall be reinforced in accordance with Par. UG-37 with a combined reinforcement that has a strength equal to the combined strength of the reinforcement that would be required for the separate openings. No portion of the cross section shall be considered as applying to more than one opening, or be evaluated more than once in a combined area.

(b) When more than two adjacent openings are to be provided with a combined reinforcement, the minimum distance between centers of any two of these openings shall preferably be at least 1½ times their average diameter, and the area of reinforcement between them shall be at least equal to 50 per cent of the total required for these two openings.

(c) When two adjacent openings as considered under (b) have a distance between centers less than 1⅓ times their average diameter, no credit for reinforcement shall be given for any of the metal between these two openings.

(d) Any number of closely spaced adjacent openings, in any arrangement, may be reinforced for an assumed opening of a diameter enclosing all such openings.

(e) When a group of openings is reinforced by

a thicker section butt-welded into the shell or head, the edges of the inserted section shall be tapered as prescribed in Par. UW-9(c).

(f) When there is a series of tube openings in a pressure vessel and it is impractical to reinforce each opening, the construction will be acceptable provided the ligaments between openings are calculated by the rules given in Par. UG-53.

UG-43 Methods of Attachment of Pipe and Nozzle Necks to Vessel Walls

(a) *General* Nozzles may be attached to the shell or head of a vessel by any of the methods of attachment given in this paragraph, except as limited in Par. UG-36.

(b) *Welded Connections* Attachment by welding shall be in accordance with the requirements of Par. UW-15 and UW-16.

(c) *Riveted Connections* Attachment by riveting shall be in accordance with the requirements of Pars. UR-23 through UR-25.

(d) *Brazed Connections* Attachment by brazing shall be in accordance with the requirements of Pars. UB-17 through UB-19.

(e) *Studded Connections* Connections may be made by means of studs. The vessel shall have a flat surface machined on the shell, or on a built-up pad, or on a properly attached plate or fitting. Drilled holes to be tapped shall not penetrate within one-fourth of the wall thickness from the inside surface of the vessel after deducting corrosion allowance, unless at least the minimum thickness required as above is maintained by adding metal to the inside surface of the vessel. The tapped holes shall also conform to the requirements of Par. UG-44(b). Studded connections shall meet the requirements for reinforcement in Pars. UG-36 through UG-42 and the requirements for attachment in Par. UR-25.

(f) *Threaded Connections* Pipes, tubes, and other threaded connections that conform to the USA Standard for Pipe Threads (USAS B2.1–1960) may be screwed into a threaded hole in a vessel wall provided the pipe engages the minimum number of threads specified in Table UG-43 after allowance has been made for curvature of the vessel wall. A built-up pad or a properly attached plate or fitting may be used to provide the metal thickness and number of threads required in Table UG-43, or to furnish reinforcement when required.

Threaded connections larger than 4-inch pipe size shall not be used in vessels that contain liquids having a flash-point below 110 F, or flammable vapors, or flammable liquids at temperatures above that at which they boil under atmospheric pressure.

Threaded connections larger than 3-in. pipe size shall not be used when the maximum allowable working pressure exceeds 125 psi, except that this 3-in. pipe size restriction does not apply to plug closures used for inspection openings, end closures, or similar purposes, or to integrally forged openings in vessel heads meeting the requirement of Par. UF-43.

(g) *Expanded Connections* A pipe, tube, or forging may be attached to the wall of a vessel by inserting through an unreinforced opening and expanding into the shell, provided the diameter is not greater than 2 in. pipe size. A pipe, tube, or forging not exceeding 6 in. in outside diameter may be attached to the wall of a vessel by inserting through a reinforced opening and expanding into the shell.

Such connections shall be:

(1) Firmly rolled in and beaded; or
(2) Rolled in, beaded, and seal-welded around the edge of the bead; or
(3) Expanded and flared not less than ⅛ in. over the diameter of the hole; or
(4) Rolled, flared, and welded; or
(5) Rolled and welded without flaring or beading, provided:
(a) The ends extend at least ¼ in., but no more than ⅜ in., through the shell;
(b) The throat of the weld is at least $\frac{3}{16}$ in., but no more than $\frac{5}{16}$ in.

When the tube or pipe does not exceed 1½ in. in outside diameter, the shell may be chamfered or recessed to a depth at least equal to the thickness of the tube or pipe and the tube or pipe may be rolled into place and welded. In no case shall the end of the tube or pipe extend more than ⅜ in. beyond the shell.

TABLE UG-43
MINIMUM NUMBER OF PIPE THREADS FOR CONNECTIONS

Size of pipe connection, in.	½ & ¾	1, 1¼ & 1½	2	2½ & 3	4–6	8	10	12
Threads engaged	6	7	8	8	10	12	13	14
Min plate thickness required, in inches	0.43	0.61	0.70	1.0	1.25	1.5	1.62	1.75

Grooving of shell openings in which tubes and pipe are to be rolled or expanded is permissible.

Expanded connections shall not be used as a method of attachment to vessels used for the processing or storage of flammable and/or noxious gases and liquids unless the connections are seal welded.

UG-44 Bolted Flange and Studded Connections

(a) It is recommended that the dimensional requirements of bolted flange connections to external piping conform to recognized standards such as: Steel Pipe Flanges and Flanged Fittings, USAS B16.5-1961; USAS B16.24-1963, Brass or Bronze Flanges and Flanged Fittings 150 and 300 Lb. and MSS 150 Lb. Corrosion Resistant Cast Flanged Valve, Flanges and Flanged Fittings Standard, MSS-SP-42, – 1953. Such flanges and flanged fittings may be used for pressure-temperature ratings in accordance with the Standard except that flanges in USAS B16.5-1961 shall be limited to the ferrous materials in Tables 2 to 8.

Other flanges shall be designed in accordance with the rules in Appendix II, except that flanges within the size and pressure ranges of the above Standards may be designed by interpolation.

(b) Where tapped holes are provided for studs, the threads shall be full and clean and shall engage the stud for a length not less than the larger of d_s or

$$0.75\, d_s \times \frac{\text{Maximum allowable stress value of stud material at design temperature}}{\text{Maximum allowable stress value of tapped material at design temperature}}$$

in which d_s is the diameter of the stud, except that the thread engagement need not exceed $1\frac{1}{2}\, d_s$.

UG-45 Nozzle Neck Thickness

The wall thickness of a nozzle neck or other connection shall not be less than the thickness computed for the applicable loadings in Par. UG-22 plus the thickness added for corrosion allowance on the connection and, except for access openings and openings for inspection only, not less than the smaller of the following:

(1) The required thickness (assuming $E = 1$) of the shell (or head) to which the connection is attached plus the corrosion allowance provided in the shell (or head) adjacent to the connection but in no case less than the minimum thickness specified for the material in the applicable part of Subsection C (for example: see Par. UCS-16(b)).

(2) The minimum thickness[1] of standard wall pipe plus the corrosion allowance on the connection.

UG-46 Inspection Openings[2]

(a) All pressure vessels for use with compressed air, except as permitted otherwise in this paragraph, and those subject to internal corrosion, or having parts subject to erosion or mechanical abrasion (see Par. UG-25), shall be provided with suitable manhole, handhole, or other inspection openings for examination and cleaning.

Compressed air as used in this paragraph is not intended to include air which has had moisture removed to the degree that it has an atmospheric dew point of –50F or less. The manufacturer's Data Report shall include a statement "for non-corrosive service" when inspection openings are not provided.

(b) When provided with telltale holes complying with the provisions of Par. UG-25, inspection openings as required in (a) may be omitted in vessels subject only to corrosion. This provision does not apply to vessels for compressed air.

(c) Vessels over 12 in. in inside diameter under air pressure which also contain other substances which will prevent corrosion need not have openings for inspection only, providing the vessel contains suitable openings through which inspection can be made conveniently, and providing such openings are equivalent in size and number to the requirements for inspection openings in (f).

(d) For vessels 12 in. or less in inside diameter, openings for inspection only may be omitted if there are at least two removable pipe connections not less than ¾ in. pipe size.

(e) Vessels over 12 in. but not over 16 in. in inside diameter, that are to be installed so that they must be disconnected from an assembly to permit inspection, need not be provided with openings for inspection only, if there are at least two removable pipe connections not less than 1½ in. pipe size.

(f) Vessels that require access or inspection openings shall be equipped as follows:[3]

(1) All vessels less than 18 in. and over 12 in. in inside diameter shall have at least two handholes or two plugged, threaded inspection openings of not less than 1½ in. pipe size;

(2) All vessels 18 to 36 in., inclusive, in inside diameter shall have a manhole or at least

[1] The minimum thickness for all materials is the nominal wall thickness listed in Table 2 of USAS B36.10-1959 less 12½ per cent. For diameters other than those listed in the table, this shall be based upon the next larger pipe size.

[2] All dimensions, given for size of vessel on which inspection openings are required, are nominal.

[3] Dimensions referred to are nominal

two handholes or two threaded pipe plug inspection openings of not less than 2 in. pipe size;

(3) All vessels over 36 in. in inside diameter shall have a manhole, except that those whose shape or use makes one impracticable shall have at least two handholes 4 × 6 in. or two equal openings of equivalent area;

(4) When handholes or pipe-plug openings are permitted for inspection openings in place of a manhole, one handhole or one pipe plug opening shall be in each head or in the shell near each head;

(5) Openings with removable heads or cover plates intended for other purposes may be used in place of the required inspection openings provided they are equal at least to the size of the required inspection openings;

(6) A single opening with removable head or cover plate may be used in place of all the smaller inspection openings provided it is of such size and location as to afford at least an equal view of the interior.

(g) When inspection or access openings are required, they shall comply at least with the following requirements:

(1) An elliptical or obround manhole shall be not less than 11 × 15 in., or 10 × 16 in. A circular manhole shall be not less than 15 in. inside diameter.

(2) A handhole opening shall be not less than 2 × 3 in., but should be as large as is consistent with the size of the vessel and the location of the opening.

(h) All access and inspection openings in a shell or unstayed head shall be designed in accordance with the rules of this Division for openings.

(i) When a threaded opening is to be used for inspection or cleaning purposes, the closing plug or cap shall be of a material suitable for the pressure and no material shall be used at a temperature exceeding the maximum temperature allowed in this Division for that material. The thread shall be a standard taper pipe thread except that a straight thread of equal strength may be used if other sealing means to prevent leakage are provided.

(j) Manholes of the type in which the internal pressure forces the cover plate against a flat gasket shall have a minimum gasket bearing width of 1 1/16 in.

BRACED AND STAYED SURFACES

UG-47 Braced and Stayed Surfaces

(a) The minimum thickness and maximum allowable working pressure for braced and stayed flat plates and those parts which, by these rules, require staying as flat plates with braces or staybolts of uniform diameter symmetrically spaced, shall be calculated by the following formulas:

$$t = p\sqrt{\frac{P}{SC}} \qquad (1)$$

$$P = \frac{t^2 SC}{p^2} \qquad (2)$$

where

t = minimum thickness of plate, exclusive of corrosion allowance, inches,

P = design pressure (or maximum allowable working pressure for existing vessels), pounds per square inch,

S = maximum allowable stress value given in Subsection C, pounds per square inch,

p = maximum pitch measured between straight lines passing through the centers of the staybolts in the different rows, which lines may be horizontal, vertical, or inclined, inches,

C = 2.1 for welded stays or stays screwed through plates not over 7/16 in. in thickness with ends riveted over,

C = 2.2 for welded stays or stays screwed through plates over 7/16 in. in thickness with ends riveted over,

C = 2.5 for stays screwed through plates and fitted with single nuts outside of plate, or with inside and outside nuts, omitting washers,

C = 2.8 for stays with heads not less than 1.3 times the diameter of the stays screwed through plates or made a taper fit and having the heads formed on the stays before installing them, and not riveted over, said heads being made to have a true bearing on the plate,

C = 3.2 for stays fitted with inside and outside nuts and outside washers where the diameter of washers is not less than $0.4p$ and thickness not less than t.

(b) The minimum thickness of plates to which stays may be applied, in other than cylindrical or spherical outer shell plates, shall be 5/16 in. except for welded construction covered by Par. UW-19.

(c) If a stayed jacket extends completely around a cylindrical or spherical vessel, or completely covers a formed head, it shall meet the requirements given above in (a), and shall also meet the applicable requirements for shells or heads in Pars. UG-27 (c) and (d) and UG-32.

(d) If a flat plate not less than 3/8 in. in thick-

ness is strengthened with a securely riveted doubling plate covering the full area of the stayed surface and having a thickness of not less than 2/3 t, then the value of t in the formula shall be three-fourths of the combined thickness of the plate and doubling plate but not more than 1 1/2 times the thickness of the plate, and the value of C given above may be increased 15 per cent.

(e) When two plates are connected by stays and but one of these plates requires staying, the value of C shall be governed by the thickness of the plate requiring staying.

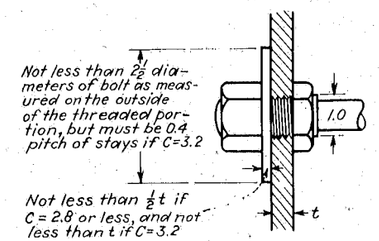

FIG. UG-47 ACCEPTABLE PROPORTIONS FOR ENDS OF THROUGH STAYS

(f) Acceptable proportions for the ends of through stays with washers are indicated in Fig. UG-47.

(g) The maximum pitch shall be 8 1/2 in., except that for welded-in staybolts the pitch may be greater provided it does not exceed 15 times the diameter of the staybolt.

(h) When the staybolting of shells is unsymmetrical by reason of interference with butt straps or other construction, it is permissible to consider the load carried by each staybolt as the area calculated by taking the distance from the center of the spacing on one side of the bolt to the center of the spacing on the other side.

UG-48 Staybolts

(a) The ends of staybolts or stays screwed through the plate shall extend beyond the plate not less than two threads when installed, after which they shall be riveted over or upset by an equivalent process without excessive scoring of the plates, or they shall be fitted with threaded nuts through which the bolt or stay shall extend.

(b) The ends of steel stays upset for threading shall be fully annealed.

(c) Requirements for welded-in staybolts are given in Par. UW-19.

UG-49 Location of Staybolts

(a) The distance from the edge of a staybolt hole to a straight line tangent to the edges of the rivet holes may be substituted for p for staybolts adjacent to the riveted edges bounding a stayed surface.

(b) When the edge of a flat stayed plate is flanged, the distance from the center of the outermost stays to the inside of the supporting flange shall not be greater than the pitch of the stays plus the inside radius of the flange.

UG-50 Dimensions of Staybolts

(a) The required area of a staybolt at its minimum cross section[1] and exclusive of any allowance for corrosion shall be obtained by dividing the load on the staybolt computed in accordance with (b) by the allowable stress value for the material used, as given in Subsection C, and multiplying the result by 1.10.

(b) *Load Carried by Stays* The area supported by a stay shall be computed on the basis of the full pitch-dimensions, with a deduction for the area occupied by the stay. The load carried by a stay is the product of the area supported by the stay and the maximum allowable working pressure.

(c) Stays made of parts joined by welding shall be checked for strength using a joint efficiency of 60 per cent for the weld.

LIGAMENTS

UG-53 Ligaments

(a) The symbols used in the formulas and charts of this paragraph are defined as follows:

p = longitudinal pitch of tube holes, inches,

p_1 = unit length of ligament, inches,

p' = diagonal pitch of tube holes, inches,

d = diameter of tube holes, inches,

n = number of tube holes in length p_1.

(b) When a cylindrical shell is drilled for tubes in a line parallel to the axis of the shell for substantially the full length of the shell as shown in Figs. UG-53.1, UG-53.2, and UG-53.3, the efficiency of the ligaments between the tube holes shall be determined as follows:

(1) When the pitch of the tube holes on every row is equal (see Fig. UG-53.1), the formula is:

$$\frac{p-d}{p} = \text{efficiency of ligament}$$

(2) When the pitch of tube holes on any one row is unequal (as in Figs. UG-53.2 and UG-53.3),

[1] The minimum cross section is usually at the root of the thread.

the formula is:

$$\frac{p_1 - nd}{p_1} = \text{efficiency of ligament}$$

(c) The strength of ligaments between tube holes measured circumferentially shall be at least 50 per cent of the strength of ligaments of similar dimensions taken in a line parallel to the axis of the cylindrical shell.

(d) When a cylindrical shell is drilled for tube holes so as to form diagonal ligaments as shown in Fig. UG-53.4, the efficiency of these ligaments shall be that given by the diagram in Fig. UG-53.5. The pitch of tube holes shall be measured either on the flat plate before rolling, or on the middle line of the plate after rolling.

To use the diagram in Fig. UG-53.5, compute the value of p'/p_1 and also the efficiency of the longitudinal ligament. Next find in the diagram the vertical line corresponding to the longitudinal efficiency of the ligament and follow this line vertically to the point where it intersects the diagonal line representing the ratio of p'/p_1. Then project this point horizontally to the left, and read the diagonal efficiency of the ligament on the scale at the edge of the diagram. The shell thickness and the maximum allowable working pressure shall be based on the ligament that has the lower efficiency.

(e) When tube holes in a cylindrical shell are arranged in symmetrical groups which extend a distance greater than the inside diameter of the shell along lines parallel to the axis and the same spacing is used for each group, the efficiency for one of the groups shall be not less than the efficiency on which the maximum allowable working pressure is based.

(f) The average ligament efficiency in a cylindrical shell, in which the tube holes are arranged along lines parallel to the axis with either uniform or nonuniform spacing, shall be computed by the following rules and shall satisfy the requirements of both:[1]

(1) For a length equal to the inside diameter of the shell for the position which gives the minimum efficiency, the efficiency shall be not less than that on which the maximum allowable working pressure is based. When the diameter of the shell exceeds 60 in., the length shall be taken as 60 in. in applying this rule;

(2) For a length equal to the inside radius of the shell for the position which gives the minimum efficiency, the efficiency shall be not less than 80 per cent of that on which the maximum allowable working pressure is based. When the radius of the shell exceeds 30 in., the length shall be taken as 30 in. in applying this rule.

[1] The rules in this paragraph apply to ligaments between tube holes and not to single openings. They may give lower efficiencies in some cases than those for symmetrical groups which extend a distance greater than the inside diameter of the shell as covered in (e). When this occurs, the efficiencies computed by the rules under (b) shall govern.

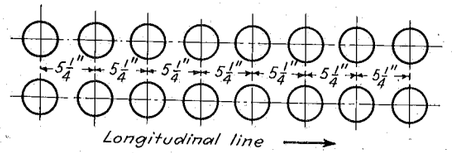

FIG. UG-53.1 EXAMPLE OF TUBE SPACING WITH PITCH OF HOLES EQUAL IN EVERY ROW

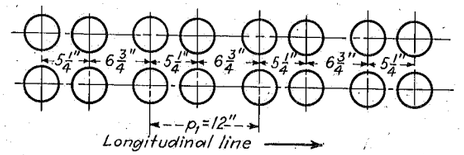

FIG. UG-53.2 EXAMPLE OF TUBE SPACING WITH PITCH OF HOLES UNEQUAL IN EVERY SECOND ROW

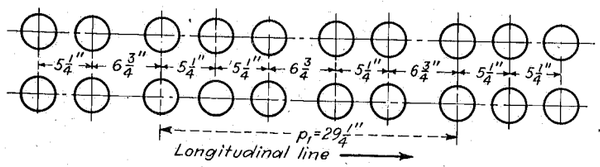

FIG. UG-53.3 EXAMPLE OF TUBE SPACING WITH PITCH OF HOLES VARYING IN EVERY SECOND AND THIRD ROW

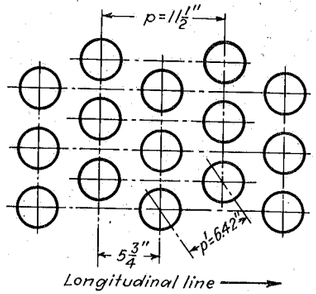

FIG. UG-53.4 EXAMPLE OF TUBE SPACING WITH TUBE HOLES ON DIAGONAL LINES

(g) For holes which are not in line, placed longitudinally along a cylindrical shell, the above rules for calculating efficiency shall hold, except that the equivalent longitudinal width of a diagonal ligaments shall be used. To obtain the equivalent width, the longitudinal pitch of the two holes having a diagonal ligament shall be multiplied by the efficiency of the diagonal ligament. The efficiency to be used for the diagonal ligaments is given in Fig. UG-53.6.

(h) Examples illustrating the application of the rules in this paragraph are given in Appendix L.

UG-54 Supports

(a) All vessels shall be so supported and the supporting members shall be arranged and/or

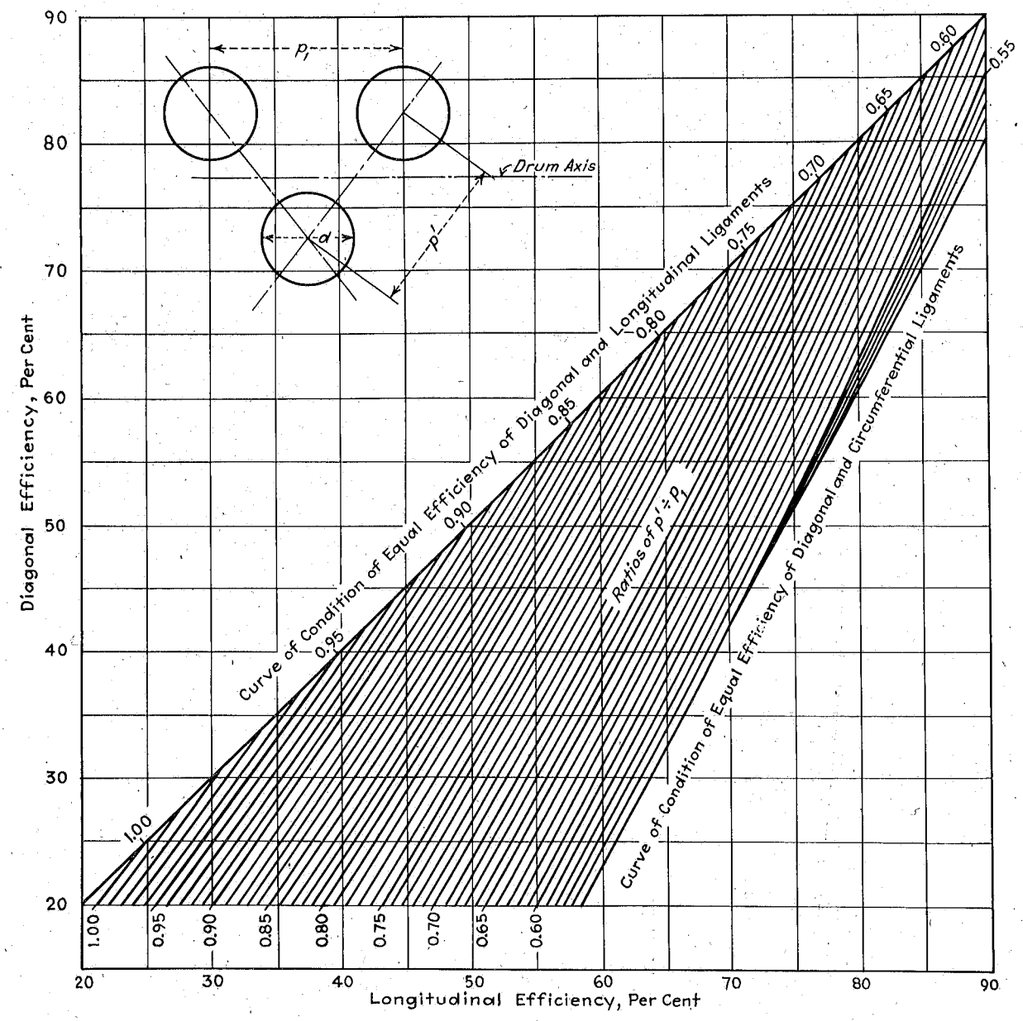

FIG. UG-53.5 DIAGRAM FOR DETERMINATION OF THE EFFICIENCY OF LONGITUDINAL AND DIAGONAL LIGAMENTS BETWEEN TUBE HOLES IN CYLINDRICAL TUBE SHEETS

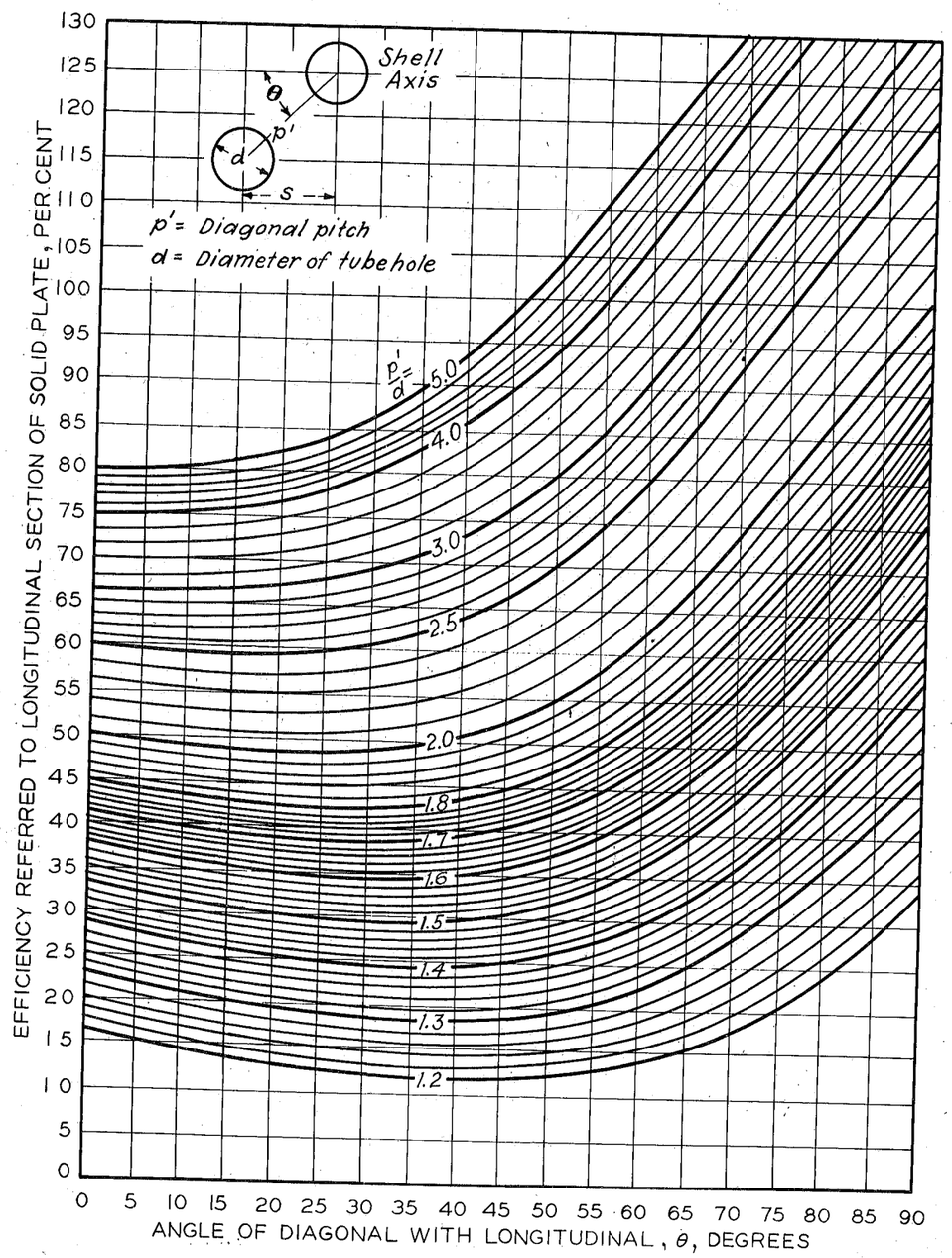

FIG. UG-53.6 DIAGRAM FOR DETERMINING EFFICIENCY OF DIAGONAL LIGAMENTS IN ORDER TO OBTAIN EQUIVALENT LONGITUDINAL EFFICIENCY

attached to the vessel wall in such a way as to provide for the maximum imposed loadings (see Par. UG-22).

(b) Appendix G contains suggested rules for the design of supports.

UG-55 Lug for Platforms, Ladders, and Other Attachments to Vessel Walls

(a) Lugs or clips may be welded, brazed, riveted, or bolted to the outside or inside of the vessel to support ladders, platforms, piping, and attachment of insulating jackets. The material of the lugs or clips need not conform to the specifications for the materials to which they are attached or to a material specification permitted in this Division, but if attached to the vessel by welding shall be of weldable quality (see Pars. UG-6(c), UG-11(c), and UW-5(a)).

(b) External piping connected to a pressure vessel should be installed so as not to overstress the vessel wall.

FABRICATION

UG-75 General

The fabrication of pressure vessels and vessel parts shall conform to the general fabrication requirements in the following paragraphs and to the specific requirements for *Fabrication* given in the applicable Parts of Subsections B and C.

UG-76 Cutting Plates and Other Stock

(a) Plates, edges of heads, and other parts may be cut to shape and size by mechanical means such as machining, shearing, grinding, or by oxygen or arc cutting. After oxygen cutting, all slag and detrimental discoloration of material which has been molten shall be removed by mechanical means prior to further fabrication or use.

(b) Ends of nozzles or manhole necks which are to remain unwelded in the completed vessel may be cut by shearing provided sufficient additional material is removed by any other method that produces a smooth finish.

(c) Exposed inside edges shall be rounded (grinding permitted) to a radius of at least ⅛ in. as shown in Fig. UW-16.1 or may be chamfered at 45 deg to at least $\frac{5}{32}$ in. flat.

UG-77 Material Identification (see Par. UG-85)

(a) Material for pressure parts preferably should be laid out so that when the vessel is completed, one complete set of the original identification markings required in the specifications for the material will be plainly visible. In case the original identification markings are unavoidably cut out, or the material is divided into two or more parts, one set shall either be accurately transferred prior to cutting by the pressure vessel manufacturer to a location where the markings will be visible on the completed vessel, or a coded marking shall be used to assure identification of each piece of material during fabrication and subsequent identification of the markings on the completed vessel. In either case an as-built sketch or a tabulation of materials shall be made, identifying each piece of material with the mill test report and the coded marking. Except as indicated in (b), material may be marked by any method acceptable to the inspector. The inspector need not witness the transfer of the marks but shall satisfy himself that it has been correctly done.

(b) To guard against the formation of incipient cracks in ferrous material less than ¼ in. in thickness and nonferrous material less than ½ in. in thickness, the materials manufacturers' markings shall be transferred in some manner other than by deep die stamping. Very light die stamping may be used if identifiable until final test and acceptance by the inspector. Any other method acceptable to the inspector, which will identify the material may be used.

(c) When material is formed into shapes by anyone other than the manufacturer of the completed pressure vessel, and the original markings as required by the applicable material specification are unavoidably cut out, or the material is divided into two or more parts, one set shall be accurately transferred by the manufacturer of the shape. The mill certification of the physical and chemical requirements of this material, in conjunction with the above modified marking requirements shall be considered sufficient to identify these shapes. Manufacturers Partial Data Reports and Parts Stamping are not a requirement unless there has been fabrication to the shapes that include welding, except as exempted by Par. UG-11.

UG-78 Repair of Defects in Materials

Minor defects in material may be repaired provided approval of the inspector is first obtained for the method and extent of repairs. Defective material that cannot be satisfactorily repaired shall be rejected.

UG-79 Forming Shell Sections and Heads

(a) All plates for shell sections and for heads shall be formed to the required shape by any process that will not unduly impair the physical properties of the material.

(b) If the plates are to be rolled, the adjoining

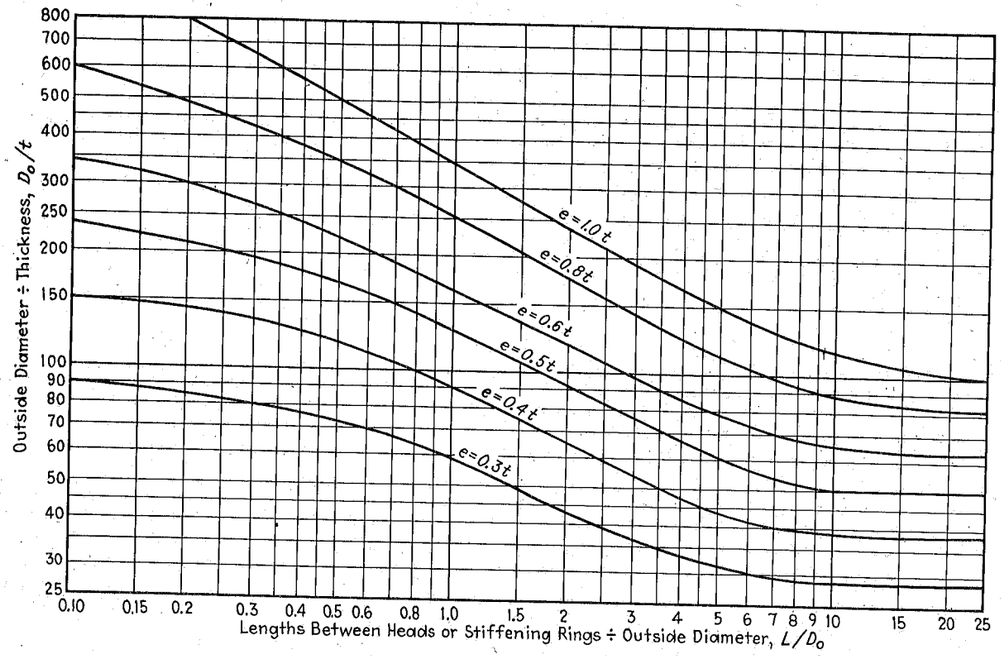

FIG. UG-80.1 MAXIMUM PERMISSIBLE DEVIATION FROM A CIRCULAR FORM "e," FOR VESSELS UNDER EXTERNAL PRESSURE

edges of longitudinal joints of cylindrical vessels shall first be shaped to the proper curvature by preliminary rolling or forming in order to avoid having objectionable flat spots along the completed joints (see Par. UG-80).

UG-80 Permissible Out-of-Roundness of Cylindrical Shells

(a) *Internal Pressure* The shell of a completed vessel shall be substantially round. The difference between the maximum and minimum inside diameters at any cross section shall not exceed one per cent of the nominal diameter at the cross section under consideration. The diameters may be measured on the inside or outside of the vessel. If measured on the outside the diameters shall be corrected for the plate thickness at the cross section under consideration (see Fig. UG-80.2).

When the cross section passes through an opening the permissible difference in inside diameters given above may be increased by two per cent of the inside diameter of the opening.

For vessels with longitudinal lap joints the permissible difference in inside diameters may be increased by the nominal plate thickness.

(b) *External Pressure* The shell of a completed vessel to operate under external pressure shall meet the following requirements at any cross section:

(1) The out-of-roundness limitations prescribed in (a).

(2) The maximum plus-or-minus deviation from the true circular form, measured radially on the outside or inside of the vessel, shall not exceed the maximum permissible deviation e obtained from Fig. UG-80.1. Measurements shall be made from a segmental circular template having the design inside or outside radius (depending upon where the measurements are taken) and a chord length equal to twice the arc length obtained from Fig. UG-29.2. The value of t shall be determined as follows:

(a) For vessels with butt joints, t is the nominal plate thickness, less corrosion allowance;

(b) For vessels with longitudinal lap joints, t is the nominal plate thickness and the permissible deviation is $(t + e)$.

(c) Where the shell at any cross section is made of plates having different thicknesses, t is the nominal thickness of the thinnest plate, less corrosion allowance.

(c) Measurements shall be taken on the surface of the base metal and not on welds or other raised parts of the material.

(d) The dimensions of a completed vessel may be brought within the requirements of this paragraph by any process which will not impair the strength of the material.

(e) Sharp bends and flat spots shall not be permitted unless provision is made for them in the design.

(f) Vessels fabricated of pipe may have permissible variations in diameter (measured outside) in accordance with those permitted under the specification covering its manufacture.

(g) An example illustrating the application of these rules for a vessel under external pressure is given in Appendix L (Par. UA-271).

UG-81 Tolerance for Formed Heads

(a) The inner surface of a head shall not deviate from the specified shape by more than 1¼ per cent of the inside diameter of the head skirt. Such deviations shall not be abrupt changes, shall be outside of the theoretical shape, and shall be measured perpendicular to the specified shape.

(b) The skirts of heads shall be sufficiently true to round so that the difference between the maximum and minimum diameters shall not exceed 1 per cent of the nominal diameter.

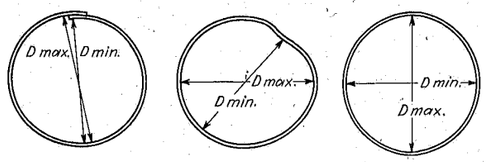

FIG. UG-80.2 EXAMPLES OF DIFFERENCES BETWEEN MAXIMUM AND MINIMUM DIAMETERS IN CYLINDRICAL SHELLS

(c) When the skirt of any unstayed formed head is machined to make a close and accurate fit into or over a shell, the thickness shall not be reduced to less than 90 per cent of that required for a blank head (see Par. UW-13). When so machined, the transition from the machined thickness to the original thickness of the head shall not be abrupt but shall be tapered for a distance of at least four times the difference between the thicknesses.

UG-82 Lugs and Fitting Attachments

All lugs, brackets, saddle-type nozzles, manhole frames, reinforcement around openings, and other appurtenances shall conform reasonably to the curvature of the shell or surface to which they are attached.

UG-83 Holes for Screw Stays

Holes for screw stays shall be drilled full size or punched not to exceed ¼ in. less than full diameter of the hole for plates over 5/16 in. in thickness and ⅛ in. less than the full diameter of the hole for plates not exceeding 5/16 in. in thickness, and then drilled or reamed to the full diameter. The holes shall be tapped fair and true with a full thread.

UG-84 Impact Tests

(a) *General* All material for shells, heads, nozzles and other vessel parts subject to stress due to pressure shall be impact-tested in accordance with the provisions of this paragraph when impact tests are required for the material by the rules in Subsection C (see Pars. UCS-66 (d) and UHA-51).

(b) *Test Plates*

(1) For vessels of welded construction, test plates similar (except for thickness) to those required in Section IX of the Code for qualification of welding procedures shall be prepared for each vessel except for material that is exempted from impact-test requirements in Subsection C and as provided in (2) and (3). The test-plate thickness shall be the same as that of the vessel wall at the longitudinal welded joint of the thickest shell course. If there is no longitudinal joint, the test-plate thickness shall be based on the circumferential joint. The test-plate material shall be taken from one of the heats of material used in the vessel, and both the electrodes and welding procedure shall be the same as used in the fabrication of the vessel. One set of impact specimens shall be taken across the weld with the notch in the weld metal and one set shall be similarly taken with the notch in the adjacent metal in the heat-affected zone.

(2) For small vessels not exceeding the volume limitations defined in Par. U-1 (g), one set of impact specimens of the material may represent all vessels from the same heat of material not in excess of 100 vessels or one heat-treatment furnace batch, whichever is smaller. In addition, when such vessels are welded, one welded test plate made from one of the heats of material used, and two sets of impact specimens cut therefrom, may represent the weld metal and the heat-affected zone metal, respectively, of one lot of 100 vessels or less, or of each heat-treatment furnace batch, whichever is smaller.

(3) For several vessels or parts of vessels being welded in succession, the plate thickness

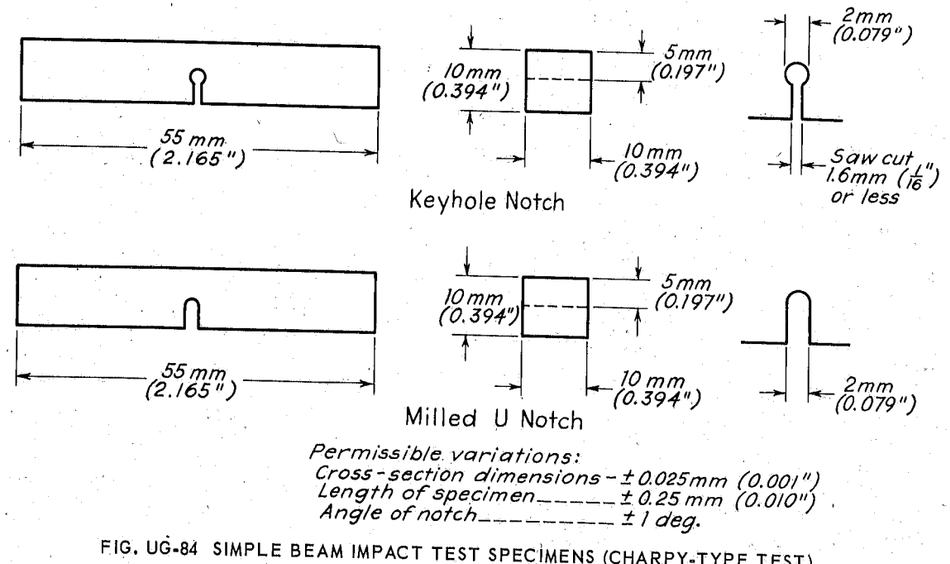

FIG. UG-84 SIMPLE BEAM IMPACT TEST SPECIMENS (CHARPY-TYPE TEST)

of which does not vary by more than ¼ in., and of the same grade of material, a test plate subject to the requirements of (1) shall be furnished for each 200 feet of longitudinal and circumferential welded joints.

(4) *(a)* The test plates and any other test material from which impact specimens are cut shall be given the same heat-treatment as the material they represent. Test specimens representing other material than the test plates shall preferably be cut from a part of the material they represent after it has been heat-treated, but may be cut from test bars of the material that have been heat-treated within the temperature range specified by the producer in treating the material from which the bars were taken.

(b) Certified reports of impact tests by the material manufacturer will be acceptable evidence provided the specimens taken are representative of the material delivered and that the material is not subjected to treatment during or following fabrication that will reduce its impact properties. If such treatment is subsequently applied to the material, impact specimens shall be so taken and treated as to be representative of the material in the finished vessel. The impact tests made by the material manufacturer or the vessel fabricator may be conducted at temperatures other than those minimums established in the material specifications of Section II.

(c) *Test Specimens*

(1) Each set of impact tests shall consist of three specimens.

(2) The impact test specimens shall be of the Charpy type, keyhole or milled U-notch and shall conform in all respects to Fig. UG-84. The standard 10 mm × 10 mm specimen shall be used where the thickness is ½ in. or greater, and for thinner material, a similar specimen shall be used except that the dimension along the axis of the notch shall be reduced to the largest possible of 7.5 mm, 5 mm, or 2.5 mm.

(3) For material that is not of sufficient thickness to permit the preparation of full-size specimens, tests may be made on the largest possible of the sub-size specimens listed in (d)(2). For material of thickness greater than ½ in., the specimens shall be taken from a location as near as practicable to a point midway between the surface and the center of thickness. The base of the notch shall be perpendicular (normal) to the surface.

(d) *Impact Test Properties*

(1) *Temperature of Tests* The impact tests shall be made on specimens cooled to a temperature within +3°F of the lowest temperature to which the vessel or part will be subjected in service or pressure testing. Tongs for handling the specimens shall be cooled to the same temperature. When this temperature has been reached, the specimen to be tested shall be transferred quickly from the cooling device to the anvil of

the testing machine and broken. The maximum permissible time for transfer and breakage of the specimen is 5 seconds.

(2) The impact properties of each set of impact specimens shall be not less than the values in the following table:

Size of specimen	Minimum impact value required for average of each set of three specimens, ft-lb	Minimum impact value permitted on one specimen only of a set, ft-lb
10 mm × 10 mm	15	10
10 mm × 7.5 mm	12.5	8.5
10 mm × 5 mm	10	7.0
10 mm × 2.5 mm	5	3.5

(3) When the average value of the three specimens equals or exceeds the minimum value permitted for a single specimen and the value for more than one specimen is below the required average value, or when the value for one specimen is below the minimum value permitted for a single specimen, a retest of three additional specimens shall be made. The value for each of these retest specimens shall equal or exceed the required average value.

When an erratic result is caused by a defective specimen, or there is uncertainty in test procedure, a retest will be allowed.

(e) *Certification of Impact Tests* The requirements for certification of impact tests on each form of material are as follows:

(1) *Plate Material* The manufacturer of plates may certify such material, provided it has been given an appropriate normalizing heat-treatment, by reporting the results of tests of one set of impact specimens taken from each plate as rolled.[1] The length of the impact specimen shall, whenever possible, be taken parallel to the direction of the expected maximum stress. When the direction of maximum stress is unknown, the manufacturer may certify on the basis of specimens taken parallel to the final direction of rolling.

(2) *Pipe or Tube Material* The manufacturer of ferrous pipe or tube material may certify such material by reporting the results of tests of one set of impact specimens, provided the requirement for production in *(a)* or *(b)* and the requirement for sampling in *(c)* are met:

(a) One set of specimens may represent all of the pipe or tubes produced from one heat of steel poured from a single melting furnace charge and subsequently processed in the same manner provided all are given a normalizing heat-treatment in a continuous treating furnace in which the temperature is automatically controlled and checked by recording pyrometer.

(b) One set of specimens may represent all of the pipe, tubes, or welding fittings that have been given a normalizing heat-treatment as a single charge in a batch-treating furnace equipped with recording pyrometers provided all have been produced from a single melting furnace heat and subsequently processed in the same manner. If more than one melting furnace heat is present in the batch heat-treating furnace, some means of identification shall be provided and one set of specimens shall be taken from each heat.

(c) One set of impact specimens shall be taken from one pipe or tube picked at random from each heat or furnace batch or portion thereof to be certified. The specimens shall have the major axis parallel to the length of pipe or tube. In the case of welding fittings, the specimens may be taken from the tubing prior to forming provided the fittings are normalized after forming. Such specimens shall be normalized before testing.

(3) *Forgings and Forged or Rolled Fittings* The manufacturer of forgings for any purpose may certify them by reporting the results of tests of one set of impact specimens taken from each melting furnace heat of material provided the following requirements for production and sampling are met.

(a) One or more test blocks shall be cut from a billet or bloom selected at random from each heat of material. Each test block shall be forge-reduced in thickness to the thickness of the finished forgings to be certified, within the limitations set below. After forging to the reduced thickness, the test block shall be heat-treated in the same manner as the finished forgings represented, which heat-treatment of test blocks may be carried out in the furnace with the forgings, or separately, but if carried out separately both heat-treatments shall be done in automatically controlled furnaces equipped with calibrated recording pyrometers, the certified records of which shall be made available to the inspector.

(b) One set of impact specimens shall be cut from each such test block and this set of specimens shall represent all forgings that are from the same heat of material and given the same heat-treatment as the test block, and the thickness of which does not differ from that of the test block by more than plus or minus 50

[1] The term "plate as rolled" used here refers to the unit plate rolled from a slab or directly from an ingot in its relation to the location and number of specimens; not to its condition.

per cent or 1½ in., whichever is less, except that forged flanges and tube sheets thicker than 5½ in. may be qualified from a 4-in. test block.

(c) As many test blocks shall be made as may be required under the foregoing rule to cover the range of thickness found in the forgings represented. The major axis of the test specimens shall be parallel to the length of the test block.

(4) *Bars, Rolled or Forged* The manufacturer of forged or rolled bars may certify such bars by reporting the results of one set of impact specimens from each bar, or from each lot of bars produced from a single melting furnace heat, processed in a similar manner and heat-treated as a single furnace batch, if heat-treated.

(5) *Castings* The manufacturer of castings may certify them by reporting the results of one set of impact specimens taken from each melting furnace heat, these specimens being taken either directly from a production casting or from test coupons cast attached thereto provided the following additional requirements are met.

(a) One set of impact specimens shall represent all castings that are from the same heat of material and that have a thickness that does not differ from the thickness of the section from which the specimens were taken by more than plus or minus 25 per cent, or 1½ in., whichever is less. A wider range of thicknesses from one heat may be covered by taking additional sets of specimens from thicker or thinner material as may be required.

(b) The test specimens shall be heat-treated in the same manner as the castings represented, which heat-treatment of specimens may be carried out in the furnace with the castings represented, or separately, but if carried out separately both heat-treatments shall be done in automatically controlled furnaces equipped with calibrated recording pyrometers, the certified records of which shall be made available to the inspector.

(6) *Small Parts* The manufacturer of small parts, either cast or forged, may certify a lot of not more than 20 duplicate parts by reporting the results of one set of impact specimens taken from one such part selected at random, provided the same kind of material and the same process of production were used for all of the lot. When the part is too small to provide the three specimens of at least minimum size shown in Fig. UG-84, no impact test need be made.

(f) *Marking* Vessels intended for use at temperatures below –20 F shall be marked as required by the provisions of Par. UG-116.

UG-85 Heat Treatment

When material is subjected to heat treatment during fabrication, the test specimens required by the applicable SA material specification shall be obtained from sample coupons which have been heat treated in the same manner as the material including such heat treatments as were applied by the producer before shipment. The required tests may be performed by the material producer or the fabricator.

When plate specification heat treatments are not performed by the Mill they shall be performed by or under the control of the fabricator who shall then place the letter "T" following the letter "G" in the Mill plate marking (See SA-20) to indicate that the material specification heat treatments have been performed. The fabricator shall also show by a supplement to the appropriate Mill Test Report that the specified heat treatment has been performed.

INSPECTION AND TESTS

UG-90 General

(a) The inspection and testing of pressure vessels to be marked with the Code U-symbol and the testing of vessels to be marked with the Code UM-symbol shall conform to the general requirements for inspection and testing in the following paragraphs and in addition to the specific requirements for *Inspection and Tests* given in the applicable Parts of Subsections B and C.

(b) The manufacturer who completes any pressure vessel to be marked with the Code U-symbol or UM-symbol has the responsibility of complying with all the requirements of this Division of Section VIII, and through proper certification, of assuring that any work done by others also complies with all requirements of this Division of Section VIII.

(c) (1) The inspector of vessels to be marked with the "U" symbol has the duty of making all applicable inspections in order to assure himself that all requirements of this Division have been met.

(2) When multiple duplicate pressure vessel fabrication makes it impracticable for the inspector to personally check each item of inspection and test as required in Par. UG-90 (c) (1), the manufacturer, in collaboration with the qualified inspector, shall prepare an inspection procedure setting forth in complete detail the methods by which the requirements of this Division will be maintained. This procedure shall be submitted to and shall have received the approval of the inspection agency. It then shall be submitted

by the inspection agency to the appropriate authority under which the inspector is commissioned, for written approval. This inspection procedure shall be used in the plant of the named manufacturer by the inspection agency submitting it, and shall be carried out by a qualified inspector in the employ of that inspection agency unless modified by agreement between the appropriate authority and the inspection agency.

UG-91 Qualification of Inspectors

The inspection required by this Division of Section VIII shall be by an inspector employed by a State or Municipality of the United States, a Canadian Province, or an inspector regularly employed by an insurance company authorized to write boiler and pressure vessel insurance. These inspectors shall have been qualified by written examination under the rules of any State of the United States or Province of Canada which has adopted the Code. An inspector continuously employed by a company for making inspections of unfired pressure vessels to be used exclusively by such company and not for resale may be accepted as a qualified inspector. The inspector shall not be in the employ of the manufacturer. All references throughout this Division to "inspector" mean "qualified inspector" as defined in this paragraph [see Par. UG-116(a)(1)].

UG-92 Access for Inspector

The manufacturer of the vessel shall arrange for the inspector to have free access to such parts of all plants as are concerned with the supply or manufacture of materials for the vessel, when so requested. The inspector shall be permitted free access, at all times while work on the vessel is being performed, to all parts of the manufacturer's shop that concern the construction of the vessel and to the site of field-erected vessels during the period of assembly and testing of the vessel. The manufacturer shall keep the inspector informed of the progress of the work, and shall notify him reasonably in advance when vessels will be ready for any required tests or inspections.

UG-93 Inspection of Material

(a) The vessel manufacturer shall obtain the certified test report or certificate of compliance as provided for in the Material Specification and the inspector shall examine the certified test report or certificate of compliance and shall determine that it represents the material and meets the requirements of the Material Specification except as otherwise provided in Pars. UG-6, UG-10 or UG-11.

(b) All materials to be used in constructing a pressure vessel shall be inspected before fabrication for the purpose of detecting, as far as possible, defects which would affect the safety of the vessel.

(1) Particular attention should be given to cut edges and other parts of rolled plate which would disclose the existence of serious laminations, shearing cracks, and other objectionable defects.

(2) All materials that are to be tested in accordance with the requirements of Par. UG-84 shall be inspected for surface cracks.

(3) When a pressure part is to be welded to a forged or rolled plate thicker than ½ in. to form a corner joint under the provisions of Par. UW-13 (e), the plate shall be inspected before welding, on all cut edges, including those for weld joint preparation, by magnetic particle or liquid penetrant examination. After welding, reinspection shall be made on all such edges that remain exposed. Where the material is nonmagnetic, only liquid penetrant methods shall be used.

(c) The inspector shall assure himself that the thickness and other dimensions of material comply with the requirements of this Division.

(d) The inspector shall satisfy himself that the inspection and marking requirements of Par. UG-24 have been complied with for those castings assigned a casting quality factor exceeding 80 per cent.

UG-94 Marking on Materials

(a) The inspector shall see that materials used in the construction bear the identification required by the applicable material specification except as otherwise provided in Pars. UG-6, UG-10 or UG-11. Should the identifying marks be obliterated or the plates be divided into two or more parts, the marks shall be properly transferred as provided in Par. UG-77. (See Par. UG-85)

(b) The inspector shall inspect steel plate material less than ¼ in. in thickness and nonferrous plate less than ½ in. in thickness for deep die stamping (see Parg. UG-77 (b)).

UG-95 Inspection of Surfaces During Fabrication

As fabrication progresses, the inspector shall carefully examine all materials used in the construction to detect defects that have been uncovered during fabrication, as well as to determine that the work has been done properly.

UG-96 Dimensional Check of Component Parts

(a) The inspector shall satisfy himself that head and ring sections conform to the prescribed shape and meet the thickness requirements after

forming. If required by the inspector, the manufacturer of the vessel shall furnish accurately formed templates (see Par. UG-80).

(b) The inspector shall assure himself of the proper fit to the curvature of the vessel surface of nozzles, manhole frames, reinforcement around openings, and other appurtenances to be attached to the inside or outside of the vessel (see Par. UG-82).

UG-97 Inspection During Fabrication

(a) The inspector shall make inspections of each pressure vessel at such stages of construction as he deems are necessary to assure himself that fabrication is in accordance with the requirements of this Division.

(b) When conditions permit entry into the vessel, as complete an examination as possible shall be made before final closure.

(c) It is recommended that an inspection be made at the time of the hydrostatic test or its permissible equivalent.

UG-98 Maximum Allowable Working Pressure

(a) The maximum allowable working pressure for a vessel is the maximum pressure permissible at the top of the vessel in its normal operating position at the operating temperature specified for that pressure. It is the least of the values found for maximum allowable working pressure for any of the essential parts of the vessel by the principles given in (b), and adjusted for any difference in static head that may exist between the part considered and the top of the vessel. (See Par. UA-60(a)).

(b) The maximum allowable working pressure for a vessel part is the maximum internal or external pressure, including the static head thereon, as determined by the rules and formulas in this Division, together with the effect of any combination of loadings listed in Par. UG-22 which are likely to occur, for the designated coincident operating temperature, excluding any metal thickness specified as corrosion allowance. (See Par. UG-25).

(c) Maximum allowable working pressure may be determined for more than one designated operating temperature, using for each temperature the applicable allowable stress value.

UG-99 Standard Hydrostatic Test

(a) All completed vessels, except those tested in accordance with the requirements of Pars. UG-100 or UG-101, shall satisfactorily pass the hydrostatic test prescribed in this paragraph.

(b) Except as otherwise permitted in (a) and (k), vessels designed for internal pressure shall be subjected to a hydrostatic test pressure which at every point in the vessel is at least equal to one and one-half times the maximum allowable working pressure[1] to be marked on the vessel multiplied by the lowest ratio (for the materials of which the vessel is constructed) of the stress value S for the test temperature on the vessel to the stress value S for the design temperature (see Par. UG-21). All loadings that may exist during this test shall be given consideration.

(c) A hydrostatic test based on a calculated pressure may be used by agreement between the user and the manufacturer. The hydrostatic test pressure at the top of the vessel shall be the minimum of the test pressures calculated by multiplying the basis for calculated test pressure as defined in Par. UA-60(e) for each pressure element by 1½ and reducing this value by the hydrostatic head on that element. When this pressure is used, the inspector shall reserve the right to require the manufacturer or the designer to furnish the calculations used for determining the hydrostatic test pressure for any part of the vessel.

(d) The requirements of (b) represent the minimum standard hydrostatic test pressure required by this Division. The requirements of (c) represent a special test based on calculations. Any intermediate value of pressure may be used. This Division does not specify an upper limit for hydrostatic test pressure. However, if the hydrostatic test pressure is allowed to exceed, either intentionally or accidentally, the value determined as prescribed in (c) to the degree that the vessel is subjected to visible permanent distortion, the inspector shall reserve the right to reject the vessel.

(e) Combination units (see Pars. UG-19(a) and UG-21) shall be tested by one of the following methods.

(1) Pressure chambers of combination units that have been designed to operate independently shall be hydrostatically tested as separate vessels; that is, each chamber shall be tested without pressure in the adjacent chamber.

(2) When pressure chambers of combination units have their common elements designed for the maximum differential pressure that can possibly occur during startup, operation, and shutdown, and the differential pressure is less than the higher pressure in the adjacent chambers, the common elements shall be subjected to a

[1] The maximum allowable working pressure may be assumed to be the same as the design pressure when calculations are not made to determine the maximum allowable working pressure.

hydrostatic test pressure of at least one and one-half times the differential pressure to be marked on the unit, corrected for temperature as in UG-99(b).

Following the test of the common elements and their inspection as required by Par. UG-99(g), the adjacent chambers shall be hydrostatically tested simultaneously (see Pars. UG-99(b) or UG-99(c)). Care must be taken to limit the differential pressure between the chambers to the pressure used when testing the common elements.

The vessel stamping and the vessel data report must describe the common elements and their limiting differential pressure. See Pars. UG-116(j) and UG-120(b).

(f) Single-wall vessels designed for a vacuum or partial vacuum only, and chambers of multichamber vessels designed for a vacuum or partial vacuum only, shall be subjected to an internal hydrostatic test or when a hydrostatic test is not practicable, to a pneumatic test in accordance with the provisions of Par. UG-100. Either type of test shall be made at a pressure not less than 1½ times the difference between normal atmospheric pressure and the minimum design internal absolute pressure.

(g) Following the application of the hydrostatic test pressure an inspection shall be made of all joints and connections. This inspection shall be made at a pressure not less than ⅔ of the test pressure.

(h) Any non-hazardous liquid at any temperature may be used for the hydrostatic test if below its boiling point. Combustible liquids having a flash point less than 110 F, such as petroleum distillates, may be used only for near atmospheric temperature tests. It is recommended that the liquid temperature be not less than 60 F where practicable.[1] The test pressure shall not be applied until the vessel and its contents are at about the same temperature.[2]

(i) Vents shall be provided at all high points of the vessel in the position in which it is to be tested to purge possible air pockets while the vessel is filling.

(j) Before applying pressure, the test equipment shall be inspected to see that it is tight and that all low-pressure filling lines and other appurtenances that should not be subjected to the test pressure have been disconnected.

(k) The test pressure for enameled vessels shall be at least equal to, but need not exceed, the maximum allowable working pressure to be marked on the vessel.

(l) Vessels which are to be galvanized may be pressure-tested either before or after galvanizing.

UG-100 Pneumatic Test[1,3] (See Par. UW-50)

(a) The pneumatic test prescribed in this paragraph may be used in lieu of the hydrostatic test prescribed in Par. UG-99, as follows:

(1) For vessels that are so designed and/or supported that they cannot safely be filled with water.

(2) For vessels, not readily dried, that are to be used in services where traces of the testing liquid cannot be tolerated and the parts of which have, where possible, been previously tested by hydrostatic pressure to the pressure required in Par. UG-99.

(b) Except for enameled vessels, for which the pneumatic test pressure shall be at least equal to, but need not exceed, the maximum allowable working pressure to be marked on the vessel, the pneumatic test pressure shall be at least equal to 1.25 times the maximum allowable working pressure to be stamped on the vessel multiplied by the lowest ratio (for the materials of which the vessel is constructed) of the stress value S for the test temperature of the vessel to the stress value S for the design temperature (see Par. UG-21). In no case shall the pneumatic test pressure exceed 1.25 times the basis for calculated test pressure as defined in Par. UA-60(e).

(c) The pressure in the vessel shall be gradually increased to not more than one half of the test pressure. Thereafter, the test pressure shall be increased in steps of approximately one tenth of the test pressure until the required test pressure has been reached. Then the pressure shall be reduced to a value equal to ⅔ of the test pressure and held for a sufficient time to permit inspection of the vessel.

[1] For vessels constructed of steels whose resistance to brittle fracture at low temperature has not been enhanced, test temperatures above 60 F may be useful in minimizing risk of brittle fracture during hydrostatic or pneumatic testting.

[2] *Caution:* A small liquid relief valve set to 1⅓ times the test pressure is recommended for the pressure test system, in case a vessel, while under test, is likely to be warmed up materially with personnel absent.

[3] In some cases it is desirable to test vessels when partly filled with liquids. For such vessels a combined hydrostatic and pneumatic test may be used as an alternative to the pneumatic test of this paragraph, provided the liquid level is set so that the maximum stress including the stress produced by pneumatic pressure at any point in the vessel (usually near the bottom) or in the support attachments, does not exceed 1.5 times the allowable stress value of the material multiplied by the applicable joint efficiency. After setting the liquid level to meet this condition, the test is conducted as prescribed in (b) and (c).

Air or gas is hazardous when used as a testing medium. It is, therefore, recommended that special precautions be taken when air or gas is used for test purposes.

UG-101 Proof Tests to Establish Maximum Allowable Working Pressure

(a) *General*

(1) The maximum allowable working pressure for vessels or vessel parts for which the strength cannot be computed with a satisfactory assurance of accuracy (see Par. U-2) shall be established in accordance with the requirements of this paragraph, using one of the test procedures applicable to the type of loading and to the material used in construction.

(2) Provision is made in these rules for two types of tests to determine the internal maximum allowable working pressure: *(a)* Tests based on yielding of the part to be tested. These tests are limited to materials with a ratio of minimum specified yield to minimum specified ultimate strength of 0.625 or less. *(b)* Tests based on bursting of the part.

(3) Safety of testing personnel should be given serious consideration when conducting proof tests, and particular care should be taken during bursting tests in (m).

(b) The tests in these paragraphs may be used only for the purpose of establishing the maximum allowable working pressure of those elements or component parts for which the thickness cannot be determined by means of the design rules given in this Division. The maximum allowable working pressure of all other elements or component parts shall not be greater than that determined by means of the applicable design rules.

(c) The vessel or vessel part for which the maximum allowable working pressure is to be established shall not previously have been subjected to a pressure greater than 1½ times the desired or anticipated maximum allowable working pressure, adjusted for operating temperature as provided in (k).

(d) When the maximum allowable working pressure of a vessel or vessel part has been established by a proof test, duplicate parts of the same materials, design and construction need not be proof tested but shall be given a hydrostatic test in accordance with Par. UG-99 or a pneumatic test in accordance with Par. UG-100 except as otherwise provided in Paragraphs UCI-101 and UCN-101. The dimensions and minimum thickness of the structure to be tested shall not vary materially from those actually used. A geometrically similar part may be qualified by a series of tests covering the complete size range of the pressure part.

(e) Tests to establish the maximum allowable working pressure of vessels or vessel parts shall be witnessed and approved by an authorized inspector.

(f) A retest shall be allowed on a duplicate vessel or vessel part if errors or irregularities are obvious in the test results.

(g) As a check that the measurements are being taken on the most critical areas, the Inspector may require a lime wash or other brittle coating to be applied on all areas of probable high stress concentrations in the test procedures given in (n) and (o). The surfaces shall be suitably cleaned before the coating is applied in order to obtain satisfactory adhesion. The technique shall be suited to the coating material.

NOTE: Strains should be measured as they apply to membrane stresses and to bending stresses within the range covered by Note 2 to Par. UG-23(c).

(h) *Application of Pressure* In the procedures given in (l), the Brittle Coating Test, (n), the Strain Measurement Test, and (o), the Displacement Measurement Test, the hydrostatic pressure in the vessel or vessel part shall be increased gradually until approximately one-half the anticipated working pressure is reached. Thereafter, the test pressure shall be increased in steps of approximately one-tenth or less of the anticipated maximum allowable working pressure until the pressure required by the test procedure is reached. The pressure shall be held stationary at the end of each increment for a sufficient time to allow the observations required by the test procedure to be made, and shall be released to zero to permit determination of any permanent strain after any pressure increment that indicates an increase in strain or displacement over the previous equal pressure increment.

(i) *Corrosion Allowance* The test procedures in this paragraph give the maximum allowable working pressure for the thickness of material tested. When the thickness as tested includes extra thickness as provided in Par. UG-25, the maximum allowable working pressure at which the vessel shall be permitted to operate shall be determined by multiplying the maximum allowable working pressure obtained from the test by the ratio

$$(t - c) / t$$

where

t = nominal thickness of the material at the weakest point, inches,

c = allowance added for corrosion, erosion, and abrasion, inches.

(j) *Determination of Yield Strength and Tensile Strength*

(1) For proof tests based on yielding, (l), (n) or (o), the yield strength (or yield point for those materials which exhibit that type of yield behavior indicated by a "sharp-kneed" portion of the stress-strain diagram) of the material in the part tested, shall be determined in accordance with the method prescribed in the applicable material specification and as described in ASTM Specification E8, Tension Testing of Metallic Materials. For proof tests based on bursting, (m), the tensile strength instead of the yield strength of the material in the part tested shall be similarly determined.

(2) Yield or tensile strength so determined shall be the average from three or four specimens cut from the part tested after the test is completed. The specimens shall be cut from a location where the stress during the test has not exceeded the yield strength. The specimens shall not be flame-cut because this might affect the strength of the material. If yield or tensile strength is not determined by test specimens from the pressure part tested, alternative methods are given in (l), (m), (n), and (o) for evaluation of proof test results to establish the maximum allowable working pressure.

(3) When excess stock from the same piece of wrought material is available and has been given the same stress relieving heat treatment as the pressure part, the test specimens may be cut from this excess stock. The specimen shall not be removed by flame-cutting or any other method involving sufficient heat to affect the properties of the specimen.

(k) *Maximum Allowable Working Pressure at Higher Temperatures* The maximum allowable working pressure for vessels and vessel parts that are to operate at temperatures at which the allowable stress value of the material is less than at the test temperature shall be determined by the following formula:

$$P_o = P_t \frac{S_o}{S_t}$$

where

P_o = maximum allowable working pressure at the operating temperature, pounds per square inch,

P_t = maximum allowable working pressure at test temperature, pounds per square inch,

S_o = maximum allowable stress value at the operating temperature, as given in subsection C, pounds per square inch,

S_t = maximum allowable stress value at test temperature as given in subsection C, pounds per square inch.

(l) *Brittle-Coating Test Procedure*

(1) Subject to the limitations of (a)(2)(*a*), this procedure may be used only for vessels and vessel parts under internal pressure, constructed of materials having a definitely determinable yield point. The component parts that require proof testing shall be coated with a lime wash or other brittle coating in accordance with (g). Pressure shall be applied in accordance with (h). The parts being proof tested shall be examined between pressure increments for signs of yielding as evidenced by flaking of the brittle coating, or by the appearance of strain lines. The application of pressure shall be stopped at the first sign of yielding, or if desired, at some lower pressure.

(2) The maximum allowable working pressure P in pounds per square inch at test temperature for parts tested under this paragraph shall be computed by one of the following formulas:

(a) If the average yield strength is determined in accordance with (j):

$$P = 0.5H \frac{Y_s}{Y_a}$$

(b) To eliminate the necessity of cutting tensile specimens and determining the actual yield strength of the material under test, one of the following formulas may be used to determine the maximum allowable working pressure:

(1) For carbon steel meeting an acceptable Code Specification, with a specified minimum tensile strength of not over 70,000 psi:

$$P = 0.5H \left(\frac{S}{S + 5000} \right)$$

(2) For any acceptable material listed in this Division.

$$P = 0.4H$$

where

H = hydrostatic test pressure at which the test was stopped, pounds per square inch,

Y_s = specified minimum yield strength, pounds per square inch,

Y_a = actual average yield strength from test specimens, pounds per square inch,

S = specified minimum tensile strength, pounds per square inch.

When formula (*b*)(1) or (*b*)(2) is used, the material in the pressure part shall have had no appreciable cold working or other treatment that would tend to raise the yield strength above the normal.

The maximum allowable working pressure at other temperatures shall be determined as provided in (k).

(m) *Bursting Test Procedure*

(1) This procedure may be used for vessels or vessel parts under internal pressure when

constructed of any material permitted to be used under the rules of this Division. The maximum allowable working pressure of any component part proof-tested by this method shall be established by a hydrostatic test to failure by rupture of a full size sample of such pressure part. The hydrostatic pressure at which rupture occurs shall be determined.

(2) The maximum allowable working pressure P in pounds per square inch at test temperature for parts tested under this paragraph shall be computed by one of the following formulas:

(a) Parts constructed of materials other than cast materials:

$$P = \frac{B}{5} \times \frac{SE}{S_a} \quad \text{or} \quad P = \frac{B}{5} \times \frac{SE}{S_m}$$

(b) Parts constructed of cast iron: (see Par. UCI-101). Parts constructed of nodular cast iron: (see Par. UCN-101).

(c) Parts constructed of cast materials, except cast iron and cast nodular iron:

$$P = \frac{Bf}{5} \times \frac{SE}{S_a} \quad \text{or} \quad P = \frac{Bf}{5} \times \frac{SE}{S_m}$$

where

B = bursting test pressure, pounds per square inch,
E = efficiency of welded joint, if used (see Table UW-12).
f = casting quality factor as specified in Par. UG-24,
S = specified minimum tensile strength, pounds per square inch,
S_a = average actual tensile strength of test specimens, pounds per square inch,
S_m = maximum tensile strength of range of specification, pounds per square inch.

The maximum allowable working pressure at other temperatures shall be determined as provided in (k).

(n) *Strain Measurement Test Procedure*

(1) Subject to limitations of (a)(2)(*a*), this procedure may be used for vessels or vessel parts under internal pressure, constructed of any material permitted to be used under the rules of this Division. Strains shall be measured in the direction of the maximum stress at the most highly stressed parts (see (g)) by means of strain gages of any type capable of indicating strains to 0.00005 in. per in. Pressure shall be applied as provided in (h).

(2) After each increment of pressure has been applied, readings of the strain gages and the hydrostatic pressure shall be taken and recorded. The pressure shall be released and any permanent strain at each gage shall be determined after any pressure increment that indicates an increase in strain for this increment over the previous equal pressure increment. Only one application of each increment of pressure is required.

(3) Two curves of strain against test pressure shall be plotted for each gage line as the test progresses, one showing the strain under pressure and one showing the permanent strain when the pressure is removed. The test may be discontinued when the test pressure reaches the value H which will, by the formula, justify the desired working pressure, but shall not exceed the pressure at which the plotted points for the most highly strained gage line reaches the value given below for the material used:

(a) 0.2 per cent permanent strain for aluminum-base and nickel-base alloys.

(b) 0.2 per cent permanent strain for carbon, low-alloy and high-alloy steels.

(c) 0.5 per cent strain under pressure for copper-base alloys.

(4) The maximum allowable working pressure P in pounds per square inch at test temperature for parts tested under this paragraph shall be computed by one of the following formulas:

(a) If the average yield strength is determined in accordance with (j):

$$P = 0.5H \frac{Y_s}{Y_a}$$

(b) If the actual average yield strength is not determined by test specimens:

$$P = 0.4H$$

where

H = hydrostatic test pressure at which the test was stopped in accordance with (n)(3), pounds per square inch,
Y_s = specified minimum yield strength, pounds per square inch,
Y_a = actual average yield strength from test specimens, pounds per square inch.

The maximum allowable working pressure at other temperatures shall be determined as provided in (k).

(o) *Displacement Measurement Test Procedure*

(1) Subject to the limitations of (a)(2)(a), this procedure may be used only for vessels and vessel parts under internal pressure, constructed of materials having a definitely determinable yield point. Displacement shall be measured at the most highly stressed parts (see (g)) by means

of measuring devices of any type capable of measuring to 0.001 in. The displacement may be measured between two diametrically opposed reference points in a symmetrical structure, or between a reference point and a fixed base point. Pressure shall be applied as provided in (h).

(2) After each increment of pressure has been applied, readings of the displacement and hydrostatic test pressure shall be taken and recorded. The pressure shall be released and any permanent displacement shall be determined after any pressure increment that indicates an increase in measured displacement for this increment over the previous equal pressure increment. Only one application of each increment is required. Care must be taken to assure that the readings represent only displacements of the parts on which measurements are being made and do not include any slip of the measuring devices or any movement of the fixed base points or of the pressure part as a whole.

(3) Two curves of displacement against test pressure shall be plotted for each reference point as the test progresses, one showing the displacement under pressure and one showing the permanent displacement when the pressure is removed. The application of pressure shall be stopped when it is evident that the curve through the points representing displacement under pressure has deviated from a straight line.

(4) The pressure coincident with the proportional limit of the material shall be determined by noting the pressure at which the curve representing displacement under pressure deviates from a straight line. The pressure at the proportional limit may be checked from the curve of permanent displacement by locating the point where the permanent displacement begins to increase regularly with further increases in pressure. Permanent deformation at the beginning of the curve that results from the equalization of stresses and irregularities in the material may be disregarded.

(5) The maximum allowable working pressure P in pounds per square inch at test temperature for parts tested under this paragraph shall be computed by one of the following formulas:

(a) If the average yield strength is determined in accordance with (j) :

$$P = 0.5H\left(\frac{Y_s}{Y_a}\right)$$

(b) To eliminate the necessity of cutting tensile specimens and determining the actual yield strength of the material under test, one of the following formulas may be used to determine the maximum allowable working pressure:

(1) For carbon steel, meeting an acceptable Code specification, with a specified minimum tensile strength of not over 70,000 pounds per square inch:

$$P = 0.5H\left(\frac{S}{S + 5000}\right)$$

(2) For any acceptable material listed in this Division.

$$P = 0.4H$$

where

H = hydrostatic test pressure coincident with the proportional limit of the weakest element of the component part tested, pounds per square inch,
Y_s = specified minimum yield strength, pounds per square inch,
Y_a = actual average yield strength, from test specimens, pounds per square inch.
S = specified minimum tensile strength, pounds per square inch.

When formula (*b*)(1) or (*b*)(2) is used, the material in the pressure part shall have had no appreciable cold working or other treatment that would tend to raise the yield strength above the normal.

The maximum allowable working pressure at other temperatures shall be determined as provided in (k).

(p) *Procedure for Vessels Having Chambers of Special Shape Subject to Collapse*

(1) Pressure chambers of vessels, portions of which have a shape other than that of a complete circular cylinder or formed head, and also jackets of cylindrical vessels which extend over only a portion of the circumference, which are not fully stay-bolted as required by Par. UG-28(i), shall withstand without excessive deformation a hydrostatic test of not less that three times the desired maximum allowable working pressure.

(2) The maximum allowable working pressure at other temperatures shall be determined as provided in (k).

UG-102 Test Gages

(a) An indicating gage shall be connected directly to the vessel. If the indicating gage is not readily visible to the operator controlling the pressure applied, an additional indicating gage shall be provided where it will be visible to the operator throughout the duration of the test. For large vessels, it is recommended that a recording gage be used in addition to indicating gages.

(b) Indicating pressure gages used in testing shall preferably have dials graduated over a range of about double the intended maximum test pres-

sure, but in no case shall the range be less than 1½ times that pressure.

(c) All gages shall be calibrated against a standard dead-weight tester or a calibrated master gage. Gages shall be recalibrated at any time that there is reason to believe that they are in error.

UG-103 Nondestructive Testing

Where magnetic particle examination is prescribed in this Division it shall be done in accordance with Appendix VI. Where liquid penetrant examination is prescribed it shall be done in accordance with Appendix VIII.

STAMPING AND REPORTS

UG-115 General

The marking and certification of all pressure vessels built under this Division of Section VIII of the Code shall comply with the requirements of the following paragraphs and in addition with the requirements for *Stamping and Reports* given in the applicable Parts of Subsections B and C.

UG-116 Required Marking

(a) Each pressure vessel shall be marked with the following:

(1) *(a)* The official Code U-symbol shown in Fig. UG-116 (a) and the words "Division 1" on vessels inspected in accordance with the requirements in Pars. UG-90 through UG-97 (when inspected by a user's inspector as provided in Par. UG-91, the word USER shall be marked above the Code symbol); or

(b) The official Code UM-symbol shown in Fig. UG-116 (b) on vessels constructed in accordance with the provisions in Par. U-1 (g).

(2) Division 1.

(3) Manufacturer's name.

(4) Maximum allowable working pressure[1,2] ——psi at——— F.

(5) Manufacturer's serial number.

(6) Year built.

(b) Vessels designed to operate at temperatures below minus 20 F shall be marked as required by the other sections of this paragraph except for the following:

(1) When impact tests in accordance with Par. UG-84 are required:

[1] When a pressure vessel is expected to operate at more than one pressure and temperature condition, other values of maximum allowable working pressure with the coincident permissible temperature may be added as required.

[2] The maximum allowable working pressure may be assumed to be the same as the design pressure when calculations are not made to determine the maximum allowable working pressure.

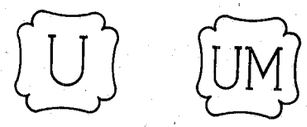

(a) (b)

FIG. UG-116 OFFICIAL SYMBOLS FOR STAMP TO DENOTE THE AMERICAN SOCIETY OF MECHANICAL ENGINEERS' STANDARD

(a) Add to Item (a)(3) above "minimum allowable temperature" giving minimum temperature for which the vessel is suitable.

(b) Add the initials I T after the figures for the minimum allowable temperature when the material in the vessel has passed the impact tests required under the provisions of Par. UG-84.

(2) When in accordance with Par. UCS-66 (c) (2) or UHA-51 (b) no impact test is performed, the vessel shall be marked as required by other sections of this paragraph for the maximum allowable working pressure for coincident temperatures of minus 20 F and above and in addition shall be marked for the operating pressure (prior to multiplying by two and one-half to obtain the design pressure) at the lowest coincident temperature below minus 20 F, such marking to be followed by the lettering UCS-66 or UHA-51.

(c) The type of construction used for the main longitudinal and/or circumferential joints of a vessel shall be indicated directly under the Code symbol by applying the appropriate lettering listed below:

Arc or gas welded	W
Riveted	R
Brazed	B
Forge welded	F
Resistance welded	RES
Seamless	S

Vessels embodying a combination of types of construction shall be marked to indicate all of the types of construction used.

(d) The maximum allowable working pressure and temperature to be indicated on vessels embodying a combination of types of construction and material shall be based on the most restrictive detail of construction and material used.

(e) (1) The letters RT shall be applied under the Code symbol to those vessels of welded construction with joints which have been completely radiographed to the extent required by the Code.

(2) The letters PRT shall be applied under the Code symbol when only a part of the vessel has been radiographed as provided in Par. UW-11

(a). The extent of radiographing and use of radiographic joint-efficiency shall be noted on Form U-1.

(f) (1) The letters HT shall be applied under the Code symbol when the whole vessel has been postweld heat treated as provided in Par. UW-10.

(2) The letters PHT shall be applied under the Code symbol when only part of the vessel has been postweld heat treated as provided in Par. UW-10. The extent of the postweld heat treatment shall be noted on Form U-1.

(g) The manufacturer who completes the vessel shall apply the Code symbol and shall have a valid certificate of authorization for its use. The Code U-symbol shall be applied in the presence of the inspector, and with his approval, after the hydrostatic test or its permissible equivalent has been made. The UM-symbol shall be applied after the vessel has passed the hydrostatic test or its permissible equivalent. The application of the Code symbol together with the final certification shall indicate that all of this Division requirements have been met.

(h) Parts of vessels for which partial data reports are required in Par. UG-120(c) shall be marked with the following:

(1) The official Code Symbol shown in Fig. UG-116 (a), above the word "PART."

(2) Division 1.

(3) The manufacturer's name.

(4) The manufacturer's serial number.

This requirement does not apply to such items as handhole covers, manhole covers and accessories.

(i) All required markings shall be located in a conspicuous place on the vessel, preferably near a manhole or handhole (see Par. UA-352, Appendix M).

(j) Either of the following arrangements may be used in marking vessels having two or more independent pressure chambers designed for the same or different operating conditions. Each detachable chamber shall be marked so as to identify it positively with the combined unit.

(1) The marking may be grouped in one location on the vessel provided it is arranged so as to indicate clearly the data applicable to each chamber including the maximum differential pressure for the common elements when this pressure is less than the higher pressure in the adjacent chambers.

(2) The complete required marking may be applied to each independent pressure chamber, provided additional marking, such as stock space, jacket, tubes, or channel box, is used to indicate clearly to which chamber the data apply.

(k) In multiple-chamber vessels, only the parts of those chambers which are required to be built under this Division (see Par. U-1) need bear the required marking. However, it is recommended that manufacturers indicate on such vessels the working conditions for which the non-Code chambers were designed.

(l) Removable pressure parts shall be permanently marked in a manner to identify them with the vessel or chamber of which they form a part. This does not apply to manhole covers, handhole covers, and their accessory parts.

(m) Permission to use the official Code symbols shown in Fig. UG-116 will be granted by the Society pursuant to the provisions of this paragraph.

(1) Any manufacturer of pressure vessels may apply to the Boiler and Pressure Vessel Committee of the Society, upon forms issued by the Society, for permission to use either or both stamps. Each applicant must agree that if permission to use any such stamp is granted, it will be used according to the rules and regulations of this Division of Section VIII of the Code and that any such stamps will be promptly returned to the Society upon demand, or in case the applicant discontinues the manufacture of the above, or in case the certificate of authorization issued to such applicant has expired and no new certificate has been issued. The holder of any such stamps shall not permit any other manufacturer to use his stamp.

(2) Permission to use the stamp may be granted or withheld by the Society in its absolute discretion. If permission is given, and the proper administrative fee paid, a certificate of authorization evidencing permission to use such symbol, expiring December 31, 1970, or the triennial anniversary date thereafter, except for the UM Certificate, will be forwarded to the applicant. Each such certificate will be signed by the Chairman and Secretary, or other duly authorized officer or officers, of the Boiler and Pressure Vessel Committee. Six (6) months prior to the date of expiration of any such certificate, the applicant must apply for a renewal of such permission and the issuance of a new certificate.

Any manufacturer of boilers or pressure vessels who holds an "S" or "U" stamp may apply to the Boiler and Pressure Vessel Committee of the Society for permission to use the "UM" stamp. Each applicant must agree that if permission to use the stamp is granted, it will be used according to the rules and regulations of this Division of Section VIII of the Code during the period for which he legitimately holds and uses the "S" or "U" stamp. Such applicant shall satisfy the authorized inspector that he has established a

procedure adequate to assure compliance with Code requirements in the manufacture of vessels to which the "UM" symbol is to be applied. The certificate of authorization for the "UM" symbol shall be renewed annually, subject to review of the manufacturers procedure by the authorized inspector. The stamp will be promptly returned to the Society upon demand, or in case the applicant discontinues the manufacture of the above, or in case the certificate of authorization issued to such applicant has expired and no new certificate has been issued. The Holder of the "UM" stamp shall not permit any other manufacturers to use his stamp.

(3) The Society reserves the absolute right to cancel or refuse to renew such permission, returning fees paid for the pro-rated unexpired term.

(4) The Boiler and Pressure Vessel Committee may at any time and from time to time make such regulations concerning the issuance and use of such stamps as it deems appropriate, and all such regulations shall become binding upon the holders of any valid certificates of authorization.

(n) All steel stamps for applying the Code symbol shall be obtained from the Society.

UG-117 Methods of Marking

The required marking shall be stamped directly on the vessel as provided in Par. UG-118 or on a separate nameplate as provided in Par. UG-119.

UG-118 Stamping

(a) When the marking required by Par. UG-116 is applied directly to the vessel, it shall be stamped with letters and figures at least $\frac{5}{16}$ in. high.

(b) The stamping shall be arranged as shown in Fig. UG-118 when space permits.

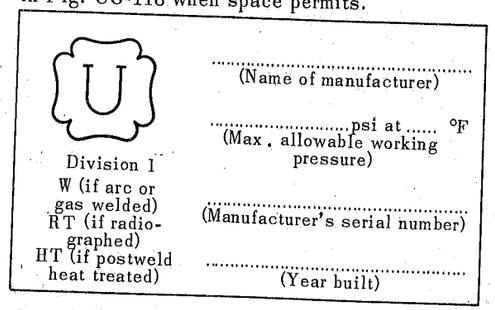

FIG. UG-118 FORM OF STAMPING

UG-119 Nameplates

(a) Nameplates bearing the marking called for in Par. UG-116 shall be used on vessels constructed of steel plates less than ¼ in. thick or of nonferrous plates less than ½ in. thick in lieu of stamping these data directly on the vessel, and may be used on vessels constructed of thicker plates. The arrangements shall be substantially as shown in Fig. UG-118. The Code symbol and the manufacturer's serial number shall be stamped on the nameplate, but the other required data may be stamped, etched, cast, or impressed thereon.

(b) The required data on a nameplate shall be in characters not less than $\frac{5}{32}$ in. high.

(c) Required nameplates shall be permanently attached by suitable means to the vessel in some conspicuous place (see Par. UG-116 (i)).

(d) The nameplate may be marked before it is affixed to the vessel, in which case the manufacturer shall see that the nameplate with the correct marking has been applied to the proper vessel, and the inspector shall satisfy himself that this has been done.

UG-120 Data Reports

(a) A data sheet shall be filled out on Form U-1 or Form U-1A by the manufacturer and shall be signed by the manufacturer and the inspector for each pressure vessel marked with the Code U-symbol. When required, a certificate of compliance on Form U-3 shall be filled out and signed by the manufacturer for each pressure vessel marked with the Code UM-Symbol.

(b) Both chambers of combination units must be described on the same data sheet. When the common elements of such units are designed for a differential pressure, this limiting pressure must also be reported.

(c) *Partial Data Reports* Data sheets for those parts of a pressure vessel requiring inspection under this Division, which are furnished by other than the shop of the manufacturer responsible for the completed vessel, shall be executed by the parts manufacturer and the inspector in accordance with the requirements of this Division and shall be forwarded, in duplicate, to the manufacturer of the finished vessel. These partial data reports, together with his own inspection, shall be the final inspector's authority to witness the application of a Code symbol to the vessel (see Par. UG-90 (c)). A sample partial data report sheet appears in the Appendix as Form U-2.

PRESSURE-RELIEF DEVICES

UG-125 General[1]

(a) All pressure vessels within the scope of this Division of Section VIII, irrespective of size or pressure, shall be provided[2] with protective devices in accordance with the requirements of Pars. UG-125 through UG-134.

(b) An unfired steam boiler as defined in Par. U-1 (e) shall be equipped with protective devices required by Section 1 of the Code insofar as they are applicable to the service of the particular installation.

(c) All pressure vessels other than unfired steam boilers shall be protected by pressure-relieving devices that will prevent the pressure from rising more than 10 per cent above the maximum allowable working pressure, except when the excess pressure is caused by exposure to fire or other unexpected source of heat.

(d) Where an additional hazard can be created by exposure of a pressure vessel to fire or other unexpected sources of external heat (for example, vessels used to store liquefied flammable gases), supplemental pressure-relieving devices shall be installed to protect against excessive pressure. Such supplemental pressure-relieving devices shall be capable of preventing the pressure from rising more than 20 per cent above the maximum allowable working pressure of the vessel. A single pressure-relieving device may be used to satisfy the requirements of this paragraph and (c), provided it meets the requirements of both paragraphs.

(e) Pressure-relieving devices shall be constructed, located, and installed so that they are readily accessible for inspection and repair and so that they cannot be readily rendered inoperative (see Appendix M), and should be selected on the basis of their intended service.

(f) Pressure-indicating gages, if used, shall preferably be graduated to approximately double the operating pressure but in no case to less than 1.2 times the pressure at which the relieving device is set to function.

[1] SAFETY VALVE: An automatic pressure relieving device actuated by the static pressure upstream of the valve and characterized by full opening pop action. It is used for gas or vapor service.

RELIEF VALVE: An automatic pressure relieving device actuated by the static pressure upstream of the valve which opens further with the increase in pressure over the opening pressure. It is used primarily for liquid service.

SAFETY RELIEF VALVE: An automatic pressure actuated relieving device suitable for use either as a safety valve or relief valve, depending on application.

[2] Safety devices need not be provided by the vessel manufacturer, but overpressure protection shall be provided prior to placing the vessel in service

(g) Rupture disks may be used in lieu of safety valves on vessels containing substances that may render a safety valve inoperative, or where a loss of valuable material by leakage should be avoided, or contamination of the atmosphere by leakage of noxious gases must be avoided (see Par. UG-127).

(h) Vessels that are to operate completely filled with liquid shall be equipped with liquid relief valves, unless otherwise protected against overpressure.

(i) The protective devices required in (a) need not be installed directly on a pressure vessel when the source of pressure is external to the vessel and is under such positive control that the pressure in the vessel cannot exceed the maximum allowable working pressure at the operating temperature except as permitted in (c) and (d) (see Par. UG-98).

NOTE: Pressure-reducing valves and similar mechanical or electrical control instruments, except for pilot operated valves as permitted in Par. UG-126 (b), are not considered as sufficiently positive in action to prevent excess pressures from being developed.

(j) Pressure-relieving devices shall be constructed of materials suitable for the pressure, temperature, and other conditions of the service intended.

UG-126 Safety and Relief Valves

(a) Safety and relief valves shall be of the direct spring-loaded type, except as permitted in (b).

(b) Pilot-valve control or other indirect operation of safety valves is not permitted unless the design is such that the main unloading valve will open automatically at not over the set pressure and will discharge its full rated capacity if some essential part of the pilot or auxiliary device should fail.

(c) Safety and relief valves for steam or air service shall be provided with a substantial lifting device so that the disk can be lifted from its seat when the pressure in the vessel is 75 per cent of that at which the valve is set to blow.

(d) Safety and relief valves for service other than steam and air need not be provided with a lifting device, although a lifting device is desirable if the vapors are such that their release will not create a hazard.

(e) If the design of a safety or relief valve is such that liquid can collect on the discharge side of the disk, the valve shall be equipped with a drain at the lowest point where liquid can collect (for Installation, see Par. UG-134).

(f) Seats or disks of cast iron shall not be used.

(g) The spring in a safety or relief valve in service for pressures up to and including 250 psi shall not be re-set for any pressure more than 10 per cent above or 10 per cent below that for which the valve is marked. For higher pressures, the spring shall not be re-set for any pressure more than 5 per cent above or 5 per cent below that for which the safety or relief valve is marked.

UG-127 Rupture Disks

(a) The cross-sectional area of the connection to a vessel shall be not less than the required relief area of the rupture disk.

(b) Every rupture disk shall have a specified bursting pressure at a specified temperature, shall be marked with a lot number, and shall be guaranteed by its manufacturer to burst within 5 per cent (plus or minus) of its specified bursting pressure.

(c) The specified bursting pressure at the coincident operating temperature shall be determined by bursting two or more specimens from a lot of the same material and of the same size as those to be used. The tests shall be made in a holder of the same form and pressure area dimensions as that with which the disk is to be used.

(d) A rupture disk may be installed between a spring-loaded safety or relief valve and the vessel provided:

(1) The valve is ample in capacity to meet the requirements of Par. UG-132 (a) and (b);

(2) The maximum pressure of the range for which the disk is designed to rupture does not exceed the maximum allowable working pressure of the vessel;

(3) The opening provided through the rupture disk, after breakage, is sufficient to permit a flow equal to the capacity of the attached valve and there is no chance of interference with the proper functioning of the valve; but in no case shall this area be less than the inlet area of the valve; and

(4) The space between a rupture disk and the valve should be provided with a pressure gage, try cock, free vent, or a suitable telltale indicator. This arrangement permits the detection of disk rupture or leakage.[1]

(e) A rupture disk may be installed on the outlet side[2] of a spring-loaded safety or relief valve which is opened by a direct action of the pressure in the vessel provided:

(1) The valve is so constructed that it will not fail to open at its proper pressure setting regardless of any back-pressure that can accumulate between the valve disk and the rupture disk;[3]

(2) The valve is ample in capacity to meet the requirements of Par. UG-132 (a) and (b);

(3) The disk is designed to rupture at not more than the maximum allowable working pressure of the vessel.

(4) The opening provided through the rupture disk, after breakage, is sufficient to permit a flow equal to the rated capacity of the attached safety or relief valve; but in no case shall this area be less than the inlet area of the safety or relief valve;

(5) Any piping beyond the rupture disk cannot be obstructed by the rupture disk or fragments;

(6) All valve parts and joints subject to stress due to the pressure from the vessel and all fittings up to the rupture disk are designed for not less than the maximum allowable working pressure of the vessel;

(7) Any small leakage or a larger flow through a break in the operating mechanism that may result in back-pressure accumulation within enclosed spaces of the valve housing other than between the rupture disk and the discharge side of the safety or relief valve, so as to hinder the safety or relief valve from opening at its set pressure, will be relieved adequately and safely to atmosphere through telltale vent openings;

(8) The contents of the vessel are clean fluids, free from gumming or clogging matter, so that accumulation in the space between the valve inlet and the rupture disk (or in any other outlet that may be provided) will not clog the outlet; and

(9) The services are such that atmospheric temperatures are not exceeded.

NOTE: When a rupture disk is installed on the outlet of a safety or relief valve fitted with a lifting device, a valved vent shall be located between the valve disk and the rupture disk to permit the checking of the operative conditions of the valve. The distance between the valve and the rupture disk shall be a practical minimum.

Users are warned that replacing a ruptured disk on the outlet of a safety or relief valve may be attended by some danger if done without first reducing the pressure in the vessel, particularly when noxious or otherwise hazardous contents might be discharged.

[1] Users are warned that a rupture disk will not burst at its design pressure if back-pressure builds up in the space between the disk and the safety or relief valve which will occur should leakage develop in the rupture disk due to corrosion or other cause.

[2] This use of a rupture disk in series with the safety or relief valve is permitted to minimize the loss by leakage through the valve of valuable, or of noxious or otherwise hazardous, materials, and where a rupture disk alone or a disk located on the inlet side of the safety valve is impracticable.

[3] Users are warned that an ordinary spring-loaded safety or relief valve will not open at its set pressure if back-pressure builds up in the space between the valve and rupture disk. A specially designed safety or relief valve is required, such as a diaphragm valve or a valve equipped with a bellows above the disk.

UG-128 Liquid Relief Valves

Any liquid relief valve used shall be at least ½ in. iron pipe size.

UG-129 Marking

(a) *Safety and Relief Valves* Each safety and relief valve ½ in. pipe size and larger shall be plainly marked by the manufacturer with the required data in such a way that the marking will not be obliterated in service. Smaller valves may be exempted from these marking requirements. The marking may be placed on the valve or on a plate or plates securely fastened to the valve. The Code symbol shall be stamped on the valve or name plate, but the other required data may be stamped, etched, impressed, or cast on the valve or name plate. The marking shall include the following:

(1) The name or identifying trademark of the manufacturer,

(2) Manufacturer's design or type number,

(3) Size ____ in.,
(The pipe size of the valve inlet)

(4) Set Pressure ____ psi,

(5) Capacity ____ lb of saturated steam per hour, or ____ cu ft of air (60 F and 14.7 psia) per min.

NOTE: In addition, the manufacturer may indicate the capacity in other fluids (see Appendix J).

(6) ASME symbol as shown in Fig. UG-129.



FIG. UG-129 OFFICIAL SYMBOL FOR STAMP TO DENOTE THE AMERICAN SOCIETY OF MECHANICAL ENGINEERS' STANDARD

(b) Safety and relief valves certified for a steam-discharging capacity under the provisions of Section I of the Code and bearing the official Code symbol stamp of that Section of the Code for safety valves, may be used on pressure vessels. The rated capacity in terms of other fluids shall be determined by the method of conversion given in Appendix J. (See Par. UG-131 (h)).

(c) *Liquid Relief Valves* Each liquid relief valve shall be marked with the following data:

(1) Name or identifying trademark of the manufacturer,

(2) Manufacturer's design or type number,

(3) Size ____ in.,
(Pipe size of inlet)

(4) Set Pressure ____ psi,

(5) Relieving capacity ____ gal. of water per min. at 70 F.

(d) *Rupture Disks* Every rupture disk shall be plainly marked by the manufacturer in such a way that the marking will not be obliterated in service. The marking may be placed on the flange of the disk or on a metal tab permanently attached thereto[1]. The marking shall include the following:

(1) The name or identifying trademark of the manufacturer,

(2) Manufacturer's design or type number and lot number,

(3) Size ____ in.,

(4) Maximum bursting pressure ____ psi,

(5) Minimum bursting pressure ____ psi,

(6) Coincident disk temperature ____ F,

(7) Capacity ____ lb of saturated steam per hour, or ____ cu ft of air (60 F and 14.7 psia) per min.

NOTE: In addition, the manufacturer may indicate the capacity in other fluids (see Appendix J).

UG-130 Use of Code Symbol Stamp

Each safety and relief valve to which the Code symbol is to be applied shall be fabricated by a manufacturer who is in possession of a Code symbol stamp (see Fig. UG-129) and a valid certificate of authorization obtainable under the following conditions:

(1) Permission to use the symbol referred to in Par. UG-129 (a) (6) will be granted by the Society pursuant to the provisions of this paragraph.

(2) Any manufacturer may apply to the Boiler and Pressure Vessel Committee of the Society upon forms issued by the Society for permission to use the stamp. Each applicant must agree that if permission to use the stamp is granted, it will be used according to the rules and regulations of this Division of Section VIII of the Code that any safety or relief valve to which the symbol is applied will have the certified capacity stamped upon the valve after tests as required in Par. UG-131, and that any stamp will be promptly returned to the Society upon demand, or in case the applicant discontinues the manufacture of safety and relief valves to which the Code symbol is applied, or in case the certificate of authorization issued to such applicant has expired and no new certificate has been issued. The holder of any such stamp shall not permit any other manufacturer to use his stamp.

[1] The marking may be coded and identified with the marking given on the certificate supplied with each rupture disk.

(3) Permission to use the stamp may be granted or withheld by the Society in its absolute discretion. If permission is given, and the proper administrative fee paid, a certificate of authorization evidencing permission to use such symbol, expiring December 31, 1964, or the triennial anniversary date thereafter, will be forwarded to the applicant. Each such certificate will be signed by the Chairman and Secretary, or other duly authorized officer or officers, of the Boiler and Pressure Vessel Committee. Six (6) months prior to the date of expiration of any such certificate, the applicant must apply for a renewal of such permission and the issuance of a new certificate.

(4) The Society reserves the absolute right to cancel or refuse to renew such permission, returning fees paid for the pro-rated unexpired term.

(5) The Boiler and Pressure Vessel Committee may at any time and from time to time make such regulations concerning the issuance and use of such stamps as it deems appropriate, and all such regulations shall become binding upon the holders of any valid certificates of authorization.

(6) All steel stamps for applying the symbol shall be obtained from the Society.

UG-131 Certification of Capacity of Safety and Relief Valves

(a) Before the symbol is applied to any safety or relief valve, the valve manufacturer shall have the capacity of his valves certified as prescribed in (d) or (e).

(b) Capacity certification tests shall be conducted on saturated steam, or air, or natural gas. When saturated steam is used, corrections for moisture content of the steam shall be made.

(c) (1) Capacity certification tests shall be conducted at a pressure not to exceed 110 per cent of the pressure for which the safety or relief valve is set to operate. The reseating pressure shall be noted and recorded.

(2) Capacity certification of pilot operated safety and relief valves may be based on tests without the pilot valves installed, provided prior to capacity tests it has been demostrated by test to the satisfaction of the official observer that the pilot valve will cause the main valve to fully open within 110 per cent of the set pressure of the main valve and that the pilot valve in combination with the main valve will meet all the requirements of this Division.

(d) (1) A capacity certification test is required on a set of three valves for each combination of size, design, and pressure setting. The stamped capacity rating for each combination of design, size and test pressure shall be 90 per cent of the average capacity of the three valves tested.

NOTE: The capacity of a set of three valves shall fall within a range of plus or minus 5 per cent of the average capacity. Failure to meet this requirement shall be cause to refuse certification of that particular safety valve design.

(2) If a manufacturer wishes to apply the Code symbol to a design of safety or relief valves, four valves of each combination of pipe size and orifice size shall be tested. These four valves shall be set at pressures which will cover the approximate range of pressures for which the valves will be used. The capacities, as determined by these four tests, shall be plotted against the absolute flow test pressure and a curve drawn through these four points. If the four points do not establish a reasonable curve, the authorized observer shall require that additional valves be tested. From this curve, relieving capacities shall be obtained. The stamped capacity shall be 90 per cent of the capacity taken from the curve.

(e) Instead of individual capacity certification as provided in (d), a coefficient of discharge K may be established for a specific safety valve design according to the following procedure:

(1) For each design the safety valve manufacturer shall submit for test at least three valves for each of three different sizes (a total of nine valves) together with detailed drawings showing the valve construction. Each valve of a given size shall be set at a different pressure.

(2) Tests shall be made on each safety or relief valve to determine its capacity-lift, popping and blow-down pressures, and actual capacity in terms of the fluid used in the test. Valves having an adjustable blow-down construction shall be adjusted prior to testing so that the blow-down does not exceed 5 per cent of the set pressure. A coefficient K_D shall be established for each test run as follows:

$$K_D = \frac{\text{Actual Flow}}{\text{Theoretical Flow}} = \text{Coefficient of discharge}$$

where Actual Flow is determined quantitatively by test, and Theoretical Flow is calculated by the appropriate formula which follows:

For Test with Dry Saturated Steam

$$W_T = 51.5\,AP$$

For Test with Air

$$W_T = 356\,AP\sqrt{\frac{M}{T}}$$

For Test with Natural Gas

$$W_T = CAP\sqrt{\frac{M}{ZT}}$$

where

W_T = theoretical flow, pounds per hour,
A = actual discharge area through the valve at developed lift, square inches,
P = (set pressure × 1.10) plus atmospheric pressure, pounds per square inch absolute,
M = molecular weight,
T = absolute temperature at inlet (degrees Fahrenheit plus 460),
C = constant for gas or vapor based on the ratio of specific heats,
$= \frac{C_p}{C_v}$ (see Fig. UA-230),
Z = compressibility factor corresponding to P and T.

The average of the coefficients K_D of the nine tests required shall be multiplied by 0.90 and this product shall be taken as the coefficient K of that design.

NOTE: All experimentally determined coefficients, K_D, shall fall within a range of plus or minus 5 per cent of the average K_D found. Failure to meet this requirement shall be cause to refuse certification of that particular valve design.

(3) The official relieving capacity of all sizes and pressures of a given design, for which K has been established under the provisions of (2), that are manufactured subsequently shall then be calculated by the appropriate formula in (2) multiplied by the coefficient K (see Appendix J).

(f) Tests shall be conducted at a place where approved equipment and personnel are available to conduct pressure-relieving capacity tests. Tests shall be made in the presence of and certified by an authorized observer. The place, personnel, equipment, and the authorized observer shall be subject to approval by the Boiler and Pressure Vessel Committee.

(g) A data sheet for each safety valve tested shall be filled out and signed by the manufacturer and by the authorized observer witnessing the tests (a sample data report appears in the Appendix as Form U-4). Such data sheet will be the manufacturer's authority to stamp valves of corresponding design, size, and pressure range. When changes are made in the design, the certification test must be repeated.

(h) It shall be permissible to rate safety valves under Par. P-273 (e) of Section I with capacity ratings at 3 per cent flow, for use on pressure vessels, without further test. In such instances, the capacity rating of the valve may be increased to allow for the flow pressure permitted in (c), namely, 10 per cent, by the multiplier

$$\frac{1.10\,p + 14.7}{1.03\,p + 14.7}$$

where p = set pressure, pounds per square inch, gage. Such valves shall be marked in accordance with Par. UG-129. This multiplier shall not be used as a divisor to transform test ratings from a higher to a lower flow.

UG-132 Determination of Pressure-Relieving Requirements

(a) Except as permitted in (b), the aggregate capacity of the pressure-relieving devices connected to any vessel or system of vessels for the release of a liquid, air, steam or other vapor shall be sufficient to carry off the maximum quantity that can be generated or supplied to the attached equipment without permitting a rise in pressure within the vessel of more than 10 per cent above the maximum allowable working pressure when the pressure-relieving devices are blowing.

(b) Protective devices as permitted in Par. UG-125 (d), as protection against excessive pressure caused by exposure to fire or other sources of external heat, shall have a relieving capacity sufficient to prevent the pressure from rising more than 20 per cent above the maximum allowable working pressure of the vessel when all pressure-relieving devices are blowing.

(c) Vessels connected together by a system of adequate piping not containing valves which can isolate any vessel may be considered as one unit in figuring the required relieving capacity of pressure-relieving safety devices to be furnished.

(d) Heat exchangers and similar vessels shall be protected with a relieving device of sufficient capacity to avoid over-pressure in case of an internal failure.

(e) The official rated capacity of a pressure-relieving safety device shall be that which is stamped on the device and guaranteed by the manufacturer.

(f) The rated pressure-relieving capacity of a safety valve for other than steam or air may be determined by the method of conversion given in Appendix J.

UG-133 Pressure Setting of Safety Devices

(a) When safety or relief valves are provided, they shall be set to blow at a pressure not exceeding the maximum allowable working pressure of the vessel at the operating temperature, except as permitted in (b). If the capacity is supplied in more than one safety or relief valve, only one

valve need be set to open at a pressure not exceeding the maximum allowable working pressure of the vessel; the additional valves may be set to open at a higher pressure, but not to exceed 105 per cent of the maximum allowable working pressure of the vessel (see Par. UG-125 (c)).

(b) Protective devices permitted in Par. UG-125 (d) as protection against excessive pressure caused by exposure to fire or other sources of external heat shall be set to operate at a pressure not in excess of 110 per cent of the maximum allowable working pressure of the vessel. If such a device is used to meet the requirements of both Pars. UG-125 (c) and UG-125 (d), it shall be set to operate at not over the maximum allowable working pressure.

(c) If the operating conditions of a valve are changed so as to require another spring rated for a different pressure, the relief setting shall be adjusted by the manufacturer or by an individual certified by the manufacturer of that safety valve; the valve shall be re-marked by either of them in conformance with Par. UG-129.

(d) Rupture disks when installed in place of, or in series with, a spring-loaded safety valve, shall be rated to rupture at a pressure not to exceed the maximum allowable working pressure of the vessel at the operating temperature.

NOTE: It is recommended that the design pressure of the vessel be sufficiently above the intended operating pressure to provide sufficient margin between operating pressure and rupture disk bursting pressure to prevent premature failure of the rupture disk due to fatigue or creep.

(e) The pressure at which any device is set to operate shall include the effects of static head and constant back pressure.

(f) The set pressure tolerances, plus or minus, of safety or relief valves, shall not exceed 2 psi for pressures up to and including 70 psi; and 3 per cent for pressures above 70 psi.

UG-134 Installation

(a) Safety and relief valves and rupture disks shall be connected to the vessel in the vapor space above any contained liquid, or to piping connected to the vapor space in the vessel which is to be protected.

(b) The opening through all pipe and fittings between a pressure vessel and its pressure-relieving device shall have at least the area of the pressure-relieving device inlet, and in all cases shall have sufficient area so as not to unduly restrict the flow to the pressure-relieving device. The opening in the vessel wall shall be designed to provide direct and unobstructed flow between the vessel and its pressure-relieving device.

(c) When two or more required pressure-relieving devices are placed on one connection, the inlet internal cross-sectional area of this connection shall be at least equal to the combined inlet areas of the safety devices connected to it, and in all cases shall be sufficient so as not to restrict the combined flow of the attached devices.

(d) Liquid relief valves shall be connected below the normal liquid level.

(e) There shall be no intervening stop valves between the vessel and its protective device or devices, or between the protective device or devices and the point of discharge, except:

(1) When these stop valves are so constructed or positively controlled that the closing of the maximum number of block valves possible at one time will not reduce the pressure-relieving capacity provided by the unaffected relieving devices below the required relieving capacity; or

(2) Under the conditions set forth in Appendix M.

(f) The safety devices on all vessels shall be so installed that their proper functioning will not be hindered by the nature of the vessel's contents.

(g) Discharge lines from pressure-relieving safety devices shall be designed to facilitate drainage or shall be fitted with an open drain to prevent liquid from lodging in the discharge side of the safety device, and such lines shall lead to a safe place of discharge. The size of the discharge lines shall be such that any pressure that may exist or develop will not reduce the relieving capacity of the relieving devices below that required to properly protect the vessel. (See Par. UG-126 (e) and Appendix M).

Subsection B
Requirements Pertaining to Methods of Fabrication of Pressure Vessels

Part UW
Requirements for Pressure Vessels Fabricated by Welding

GENERAL

UW-1 Scope

The rules in Part UW are applicable to pressure vessels and vessel parts that are fabricated by welding and shall be used in conjunction with the general requirements in Subsection A, and with the specific requirements in Subsection C that pertain to the class of material used.

UW-2 Service Restrictions

(a) When vessels are to contain lethal[1] substances, either liquid or gaseous, all butt-welded joints shall be fully radiographed, and when fabricated of carbon or low-alloy steel, such vessels shall be postweld heat treated. The joints of various categories (see Par. UW-3) shall be as follows:

(1) All joints of Category A shall be Type No. (1) of Table UW-12.

(2) All joints of Categories B and C shall be Type No. (1) or No. (2) of Table UW-12.

(3) All joints of Category D shall be full penetration welds extending through the entire thickness of the vessel wall or nozzle wall.

(b) When vessels are to operate below –20 F and impact tests in accordance with Par. UG-84 are required for the material or weld metal, the joints of various categories (see Par. UW-3) shall be as follows:

(1) All joints of Category A shall be Type No. (1) of Table UW-12.

(2) All joints of Category B shall be Type No. (1) or No. (2) of Table UW-12.

[1] By "lethal substances" are meant poisonous gases or liquids of such a nature that a very small amount of the gas or of the vapor of the liquid mixed or unmixed with air is dangerous to life when inhaled. For purposes of this Division this class includes substances of this nature which are stored under pressure or may generate a pressure if stored in a closed vessel. Some such substances are hydrocyanic acid, carbonyl chloride, cyanogen, mustard gas, and xylyl bromide. For design purposes under this Division, chlorine, ammonia, natural or manufactured gas, any liquefied petroleum gas (such as propane, butane, butadiene), and vapors of any other petroleum products are not classified as lethal substances.

(3) All joints of Category C shall be full penetration welds extending through the entire section at the joint.

(4) All joints of Category D shall be full penetration welds extending through the entire thickness of the vessel wall or nozzle wall.

(c) Unfired steam boilers with design pressures exceeding 50 pounds per square inch shall have all joints of Category A (see Par. UW-3) in accordance with Type No. (1) of TableUW-12 and all joints in Category B in accordance with Type No. (1) or No. (2) of Table UW-12. All butt-welded joints shall be fully radiographed. When fabricated of carbon or low-alloy steel such vessels shall be postweld heat treated. (See also Pars. U-1(e)(2), UCS-16(b) and UCS-25).

(d) Pressure vessels subject to direct firing may be constructed in accordance with all applicable rules of this Division and shall meet the following requirements.

(1) All welded joints in Category A (see Par. UW-3) shall be in accordance with Type (1) of Table UW-12, and all welded joints in Category B, when the thickness exceeds $\frac{5}{8}$ in., shall be in accordance with Type (1) or Type (2) of Table UW-12. No welded joints of Type (3) of Table UW-12 are permitted for either Category A or B joints in any thickness.

(2) When the thickness at welded joints exceeds $\frac{5}{8}$ in. for carbon (P-1) steels and for all thicknesses for low-allow steels (other than P-1 steels) postweld heat treatment is required. For all other material and in any thickness, the requirements for postweld heat treatment shall be in conformance with the applicable subsections of this Division. See also Par. U-1(e)(2), UCS-16(b), UCS-25 and UCS-56.

(3) The user, his agent or the manufacturer of the vessel shall make available to the inspector the calculations used to determine the design temperature of the vessel. The provisions of Par. UG-20 shall apply except that pressure parts in vessel areas having joints other than types (1) and (2) of Table UW-12, subject to direct radiation and/or the products of combustion shall be designed for temperatures not less than the maximum surface metal temperatures expected under operating conditions.

UW-3 Welded Joint Category

(a) The term "Category" as used herein defines the location of a joint in a vessel, but not the type of joint. The "Categories" established by this paragraph are for use elsewhere in this Division in specifying special requirements regarding joint type and degree of inspection for certain welded pressure-joints. Since these special requirements, which are based on service, material, and thickness, do not apply to every welded joint, only those joints to which special requirements apply are included in the categories. The special requirements will apply to joints of a given category only when specifically so stated. The joints included in each category are designated as joints of Categories A, B, C, and D below. Fig. UW-3 illustrates typical joint locations included in each category.

(1) *Category A* Longitudinal welded joints within the main shell, communicating chambers,[1] transitions in diameter, or nozzles; any welded joint within a sphere, within a formed or flat head, or within the side plates[2] of a flat sided vessel; circumferential welded joints connecting hemispherical heads to main shells, to transitions in diameters, to nozzles, or to communicating chambers.[1]

(2) *Category B* Circumferential welded joints within the main shell, communicating chambers,[1] nozzles, or transitions in diameter including joints between the transition and a cylinder at either the large or small end; circumferential welded joints connecting formed heads other than hemispherical to main shells, to transitions in diameter, to nozzles, or to communicating chambers.[1]

(3) *Category C* Welded joints connecting flanges, Van Stone laps, tube sheets, or flat heads to main shell, to formed heads, to transitions in diameter, to nozzles, or to communicating chambers;[1] any welded joint connecting one side plate[2] to another side plate of a flat sided vessel.

(4) *Category D* Welded joints connecting communicating chambers[1] or nozzles to main shells, to spheres, to transitions in diameter, to heads, or to flat sided vessels, and those joints connecting nozzles to communicating chambers[1] (for nozzles at the small end of a transition in diameter, see Category B).

(b) When butt-welded joints are required elsewhere in this Division for Category B, an angle joint connecting a transition in diameter to a cylinder shall be considered as meeting this requirement provided the angle α (see Figure UW-3) does not exceed 30 degrees. All requirements pertaining to the butt-welded joint shall apply to the angle joint.

[1] Communicating chambers are defined as appurtenances to the vessel which intersect the shell or heads of a vessel and form an integral part of the pressure-containing enclosure, e.g., sumps.

[2] Side plates of a flat sided vessel are defined as any of the flat plates forming an integral part of the pressure containing enclosure.

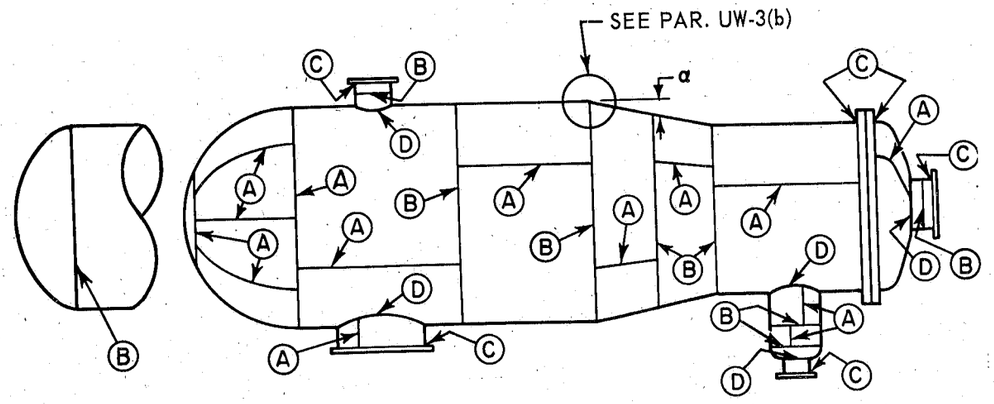

FIG. UW-3 ILLUSTRATION OF WELDED JOINT LOCATIONS TYPICAL OF CATEGORIES A, B, C, AND D

MATERIALS

UW-5 General

(a) Materials used in the construction of welded pressure vessels shall comply with the requirements for materials given in Pars. UG-5 through UG-14, and shall be proven of good weldable quality. Satisfactory qualification of the welding procedure under Section IX of the Code is considered as proof.

(b) Two materials of different specifications may be joined by welding provided the requirements of Section IX, Par. Q-11 of the Code are met.

DESIGN

UW-8 General

The rules in the following paragraphs apply specifically to the design of pressure vessels and vessel parts that are fabricated by welding and shall be used in conjunction with the general requirements for *Design* in Subsection A, and with the specific requirements for *Design* in Subsection C that pertain to the class of material used.

UW-9 Design of Welded Joints

(a) *Permissible Types* The types of welded joints permitted in arc and gas welding processes are listed in Table UW-12, together with the limiting plate thickness permitted for each type. Butt-type joints only are permitted with pressure welding processes (see Par. UW-27 (2)).

(b) *Welding Grooves* The dimensions and shape of the edges to be joined shall be such as to permit complete fusion and complete joint penetration. Qualification of the welding procedure, as required in Par. UW-28, is acceptable as proof that the welding groove is satisfactory.

(c) *Tapered Plate Edges* A tapered transition section having a length not less than four times the offset between the adjacent plate surfaces, as shown in Fig. UW-9, shall be provided at joints between plates that differ in thickness by more than one-fourth of the thickness of the thinner plate or by more than $\frac{1}{8}$ in. The transition section may be formed by any process that will provide a uniform taper. The weld may be partly or entirely in the tapered section or adjacent to it as indicated in Fig. UW-9.

(d) Except when radiographed 4 in. each side of each welded intersection, vessels made up of two or more courses shall have the centers of the welded longitudinal joints of adjacent courses staggered or separated by a distance of at least five times the thickness of the thicker plate.

(e) *Lap Joints* For lapped joints, the surface overlap shall be not less than four times the thickness of the thinner plate except as otherwise provided for heads in Par. UW-13.

(f) *Welded Joints Subject to Bending Stresses* Except where specific details are permitted in other paragraphs, fillet welds shall be added where necessary to reduce stress concentration. Corner joints, with fillet welds only, shall not be used unless the plates forming the corner are

properly supported independently of such welds. (See Par. UW-18.)

UW-10 Postweld Heat Treatment

Pressure vessels and pressure vessel parts shall be postweld heat treated as prescribed in Par. UW-40 when postweld heat treatment is required in the applicable part of Subsection C.

UW-11 Radiographic Examination

(a) *Full Radiography* The following butt welded joints made in accordance with Types No. (1) and No. (2) of Table UW-12 shall be examined radiographically for their full length in the manner prescribed in Par. UW-51.

NOTE: The requirements specifying which joints must be butt welded will be found in the paragraphs referenced below.

(1) Joints in vessels used to contain lethal substances (see Par. UW-2(a)).

(2) Joints in plates or vessel walls in which the thinner of the plate or vessel wall thickness at the welded joint exceeds 1½ in., or exceeds the lesser thicknesses prescribed in Par. UCS-57, UHA-33, UCL-35, or UCL-36 for the materials covered therein.

(3) Joints in unfired steam boilers, the design pressure of which exceeds 50 psi (see Par. UW-2(c)).

(4) Joints in nozzles, communicating chambers, etc. in a vessel or vessel section that is required to be radiographed under (1), (2), (3), or (5) hereof, except that circumferential welded butt joints in nozzles and communicating chambers not exceeding 10 in. nominal pipe size or 1⅛ in. wall thickness need not be radiographed.

NOTE: This provision applies to the fabrication of part itself, and not to the method of attachment to the vessel.

(5) All butt-welded joints in a vessel or vessel section where the design of the vessel or vessel section is based on the use of the joint efficiency permitted by Par. UW-12(a). All joints of Categories A and B (see Par. UW-3) shall be of Type No. (1) or No. (2). In the case of a vessel section, the circumferential butt welds joining it to adjacent shell sections or head shall be fully radiographed.

(b) *Spot Radiography* Butt-welded joints made in accordance with Type No. (1) or No. (2) of Table UW-12 which are not required to be fully radiographed by (a) shall be examined by spot-radiographing in accordance with Par. UW-52, except as described in (c).

NOTE: This requirement specifies spot-radiography for butt welds of Type No. (1) or No. (2) that are used in a vessel, but does not preclude the use of fillet and/or corner welds permitted by other paragraphs,

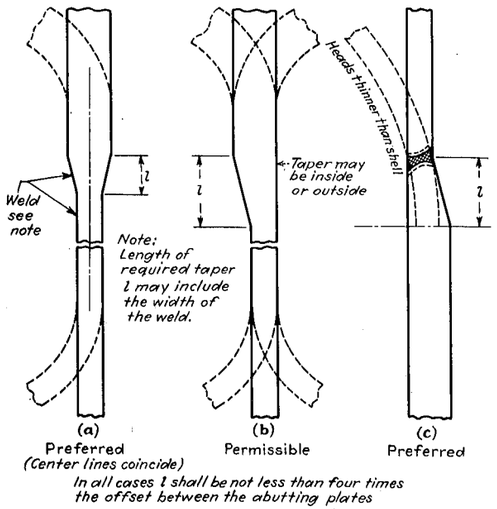

FIG. UW-9 BUTT WELDING OF PLATES OF UNEQUAL THICKNESSES

such as for nozzle and manhole attachments, welded stays, flat heads, etc., which need not be spot radiographed.

(c) *No Radiography* Except as required in (a), no radiographic examination of welded joints is required when the vessel or vessel part is designed for external pressure only, or when the vessel design complies with Par. UW-12(c).

UW-12 Joint Efficiencies

Table UW-12 gives the joint efficiencies, E, to be used in the formula of this Division for joints completed by an arc or gas welding process. The joint efficiencies depend on the type of joint and on the degree of examination of the joints.

(a) The value of E not greater than that given in column (a) of Table UW-12 shall be used in the design calculations for fully radiographed butt welds (see Par. UW-11(a)).

(b) The value of E not greater than that given in column (b) of Table UW-12 shall be used in the design calculations for butt welded joints in vessels or parts of vessels that are spot-radiographically examined in accordance with the requirements of Pars. UW-11(b) and UW-52.

(c) The value of E not greater than that given in column (c) of Table UW-12 shall be used in the design calculations for welded joints in vessels that are neither fully radiographed nor spot-radiographically examined, provided that in all other design calculations a stress value equal to

TABLE UW-12
MAXIMUM ALLOWABLE JOINT EFFICIENCIES FOR ARC AND GAS WELDED JOINTS

No.	Type of Joint Description	Limitations	Degree of Examination (a) Fully Radiographed[1]	(b) Spot Examined[2]	(c) Not Spot Examined[3]
(1)	Butt joints as attained by double-welding or by other means which will obtain the same quality of deposited weld metal on the inside and outside weld surfaces to agree with the requirements of Par. UW-35. Welds using metal backing strips which remain in place are excluded.	None	1.00	0.85	0.70
(2)	Single-welded butt joint with backing strip other than those included under (1)	(a) None except as in (b) below. (b) Butt weld with one plate offset – for circumferential joints only, ⅝ in. max. thickness per Par. UW-13(c) and Fig. UW-13.1 (k)	0.90	0.80	0.65
(3)	Single-welded butt joint without use of backing strip.	Circumferential joints only, not over ⅝ in. thick and not over 24 in. outside diameter	. . .	. . .	0.60
(4)	Double full-fillet lap joint	Longitudinal joints not over ⅜ in. thick. Circumferential joints not over ⅝ in. thick	. . .	. . .	0.55
(5)	Single-full fillet lap joints with plug welds conforming to Par. UW-17	(a) Circumferential joints[4] for attachment of heads not over 24 in. outside diameter to shells not over ½ in. thick (b) Circumferential joints for the attachment to shells of jackets not over ⅝ in. in nominal thickness where the distance from the center of the plug weld to the edge of the plate is not less than 1½ times the diameter of the hole for the plug.	. . .	. . .	0.50
(6)	Single full-fillet lap joints without plug welds	(a) For the attachment of heads convex to pressure to shells not over ⅝ in. required thickness, only with use of fillet weld on inside of shell; or (b) for attachment of heads having pressure on either side, to shells not over 24 in. inside diameter and not over ¼ in. required thickness with fillet weld on outside of head flange only.	. . .	. . .	0.45

[1] See Pars. UW-12(a) and UW-51.
[2] See Pars. UW-12(b) and UW-52.
[3] The maximum allowable joint efficiencies shown in this column are the weld joint efficiencies multiplied by 0.80 (and rounded off to the nearest 0.05), to effect the basic reduction in allowable stress required by this Division for welded vessels that are not spot examined. See Par. UW-12(c).
[4] Joints attaching hemispherical heads to shells are excluded.

80 per cent of the allowable stress value prescribed for the material in Subsection C is used except for stresses S_a, S_b, S_f and S_n used in flange design and defined in Par. UA-47(b) or for calculating the thickness of braced and stayed surfaces by formulas (1) and (2) of Par. UG-47(a).

(d) A value of E not greater than 0.80 may be used in the formulas of this Division for joints completed by forge-welding or by any of the pressure-welding processes given in Par. UW-27(2), provided the welding process used is permitted by the rules in the applicable parts of Subsection C for the material being welded. The quality of such welds used in vessels or parts of vessels shall be proved as follows: Test specimens shall be representative of the production welding on each vessel. They may be removed from the shell itself or from a prolongation of the shell including the longitudinal joint, or, in the case of vessels not containing a longitudinal joint, from a test plate of the same material and thickness as the vessel and welded in accordance with the same procedure. One reduced-section tension test and two side-bend tests shall be made in accordance with, and shall meet the requirements of Pars. Q-6 and Q-8, or QN-6 and QN-8, Section IX.

UW-13 Attachment Details

(a) Ellipsoidal, torispherical and other types of formed heads, concave or convex to the pressure, shall have a skirt length not less than that shown in Fig. UW-13.1. Heads that are fitted inside or over a shell shall have a driving fit before welding.

(b) Intermediate heads, without limit to thickness, of the type shown in Fig. UW-13.1(f), may be used for all types of vessels provided that the outside diameter of the head skirt is a close fit inside the overlapping ends of the adjacent length of cylinder. This construction may also be used for end heads when the thickness of the shell section of the vessel does not exceed $\frac{5}{8}$ in.

(c) Heads concave to pressure may be attached to shells using a butt weld with one plate offset as shown in Fig. UW-13.1(k). The offset shall be smooth and symmetrical and shall not be machined or otherwise reduced in thickness. There shall be a uniform force fit with the mating section at the root of the weld.

(d) The requirements for the attachment of welded unstayed flat heads to shells are given in Par. UG-34 and in (e) and (f) hereunder.

(e) When shells, heads or other pressure parts are welded to a forged or rolled plate to form a corner joint, as in Fig. UW-13.2, the joint shall meet the following requirements (see also Par. UG-93(b)(3)):

(1) On the cross-section through the welded joint, the line of fusion between the weld metal and the forged or rolled plate being attached shall be projected on planes both parallel to and perpendicular to the surface of the plate being attached, in order to determine the dimensions a and b respectively (see Fig. UW-13.2).

(2) For flange rings of bolted flanged connections, and for flat heads and unsupported tube sheets with a projection having holes for a bolted connection, the sum of a and b shall be not less than 3 times the nominal wall thickness of the abutting pressure part.

(3) For supported tube sheets with a projection having holes for a bolted connection, the sum of a and b shall not be less than 2 times the nominal wall thickness of the abutting pressure part. A supported tube sheet is defined as one in which not less than 80 per cent of the pressure load on the tube sheet is carried by tubes, stays or braces.

(4) For other components, the sum a and b shall be not less than 2 times the nominal wall thickness of the abutting pressure part. Examples of such components are flat heads and supported and unsupported tube sheets without a projection having holes for a bolted connection, and the side plates of a rectangular vessel.

(5) Other dimensions at the joint shall be in accordance with details as shown in Fig. UW-13.2.

(6) Joint details that have a dimension through the joint less than the thickness of the shell, head or other pressure part, or that provide attachment eccentric thereto, are not permissible, (See Fig. UW-13.2(o), (p) and (q)).

(f) Hubs for butt-welding to the adjacent shell, head or other pressure part, as in Fig. UW-13.3, shall not be machined from rolled plate. The component having the hub shall be forged in such a manner as to provide in the hub the full minimum tensile strength and elongation specified for the material, in a direction parallel to the axis of the vessel. Proof of this shall be furnished by a tension test specimen (subsize if necessary) taken in this direction and as close to the hub as is practical. In no case shall the height of the hub be less than 1.5 times the thickness of the pressure part to which it is welded.

UW-14 Openings in or Adjacent to Welds

(a) Any type of opening that meets the require-

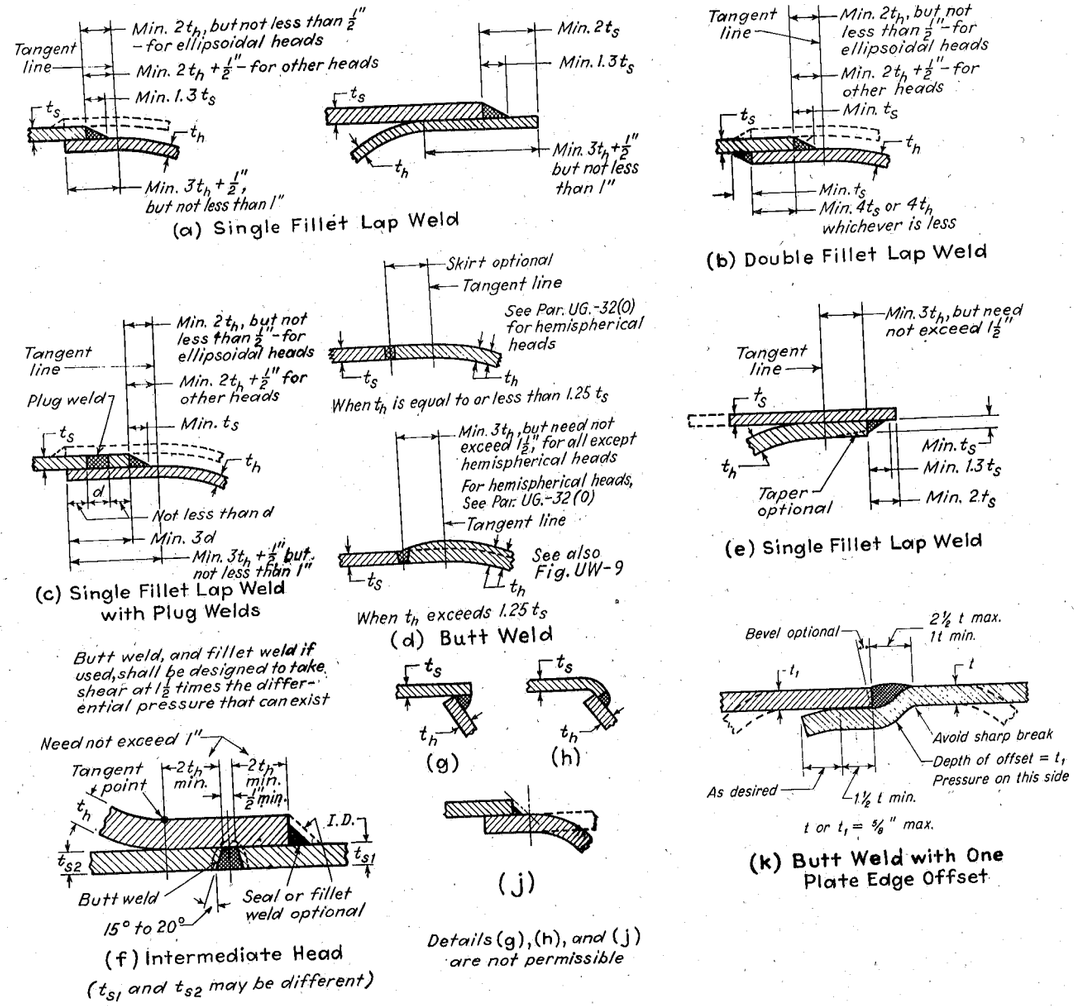

FIG. UW-13.1 HEADS ATTACHED TO SHELLS (See Table UW-12 for Limitations)

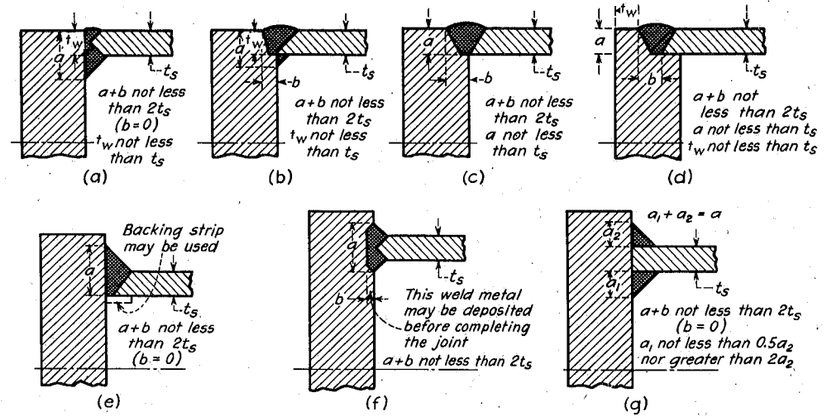

TYPICAL UNSTAYED FLAT HEADS, SUPPORTED AND UNSUPPORTED TUBE SHEETS WITHOUT A BOLTING FLANGE, AND SIDE PLATES OF RECTANGULAR VESSELS

For unstayed flat heads, see also Par. UG-34
t_s is as defined in Par. UG-34 (b)

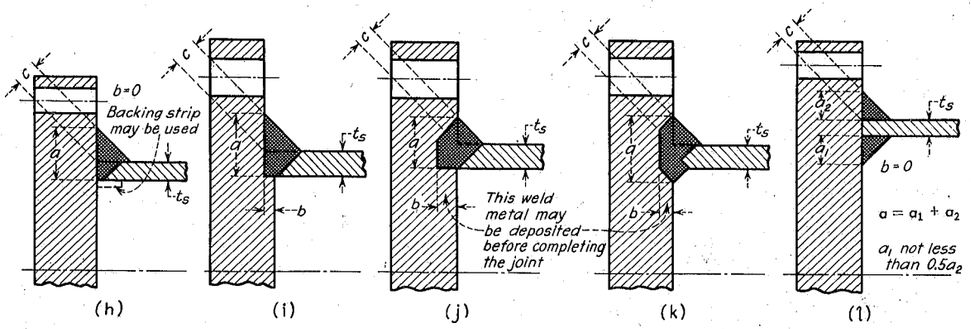

t_s *is as defined in Par. UG-34 (b)*

TYPICAL SUPPORTED AND UNSUPPORTED TUBE SHEETS WITH A BOLTING FLANGE

For supported tube sheets: a + b not less than $2t_s$; c not less than $0.7t_s$ or $1.4t_r$, whichever is less.
For unsupported tube sheets: a + b not less than $3t_s$; c not less than t_s or $2t_r$, whichever is less.
t_s and t_r are as defined in Par. UG-34(b)
See Par. UN-13(e)(3) for definition of supported tube sheet.

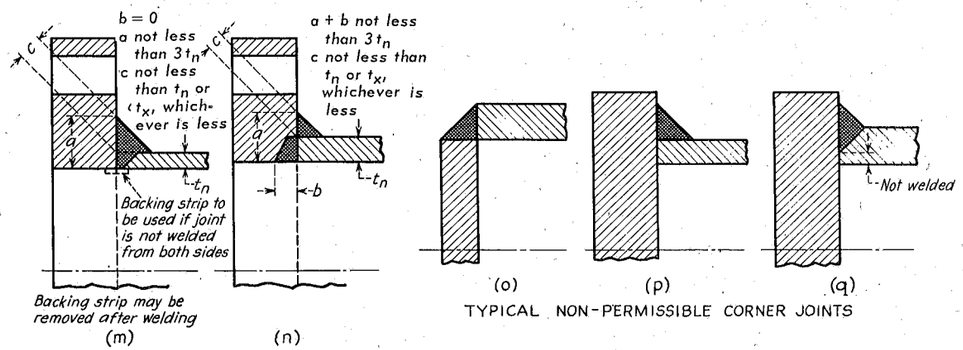

TYPICAL BOLTED FLANGE CONNECTIONS
c, t_n and t_x are as defined in Par. UA-47(b)

TYPICAL NON-PERMISSIBLE CORNER JOINTS

FIG. UW-13.2 ATTACHMENT OF PRESSURE PARTS TO PLATES TO FORM A CORNER JOINT

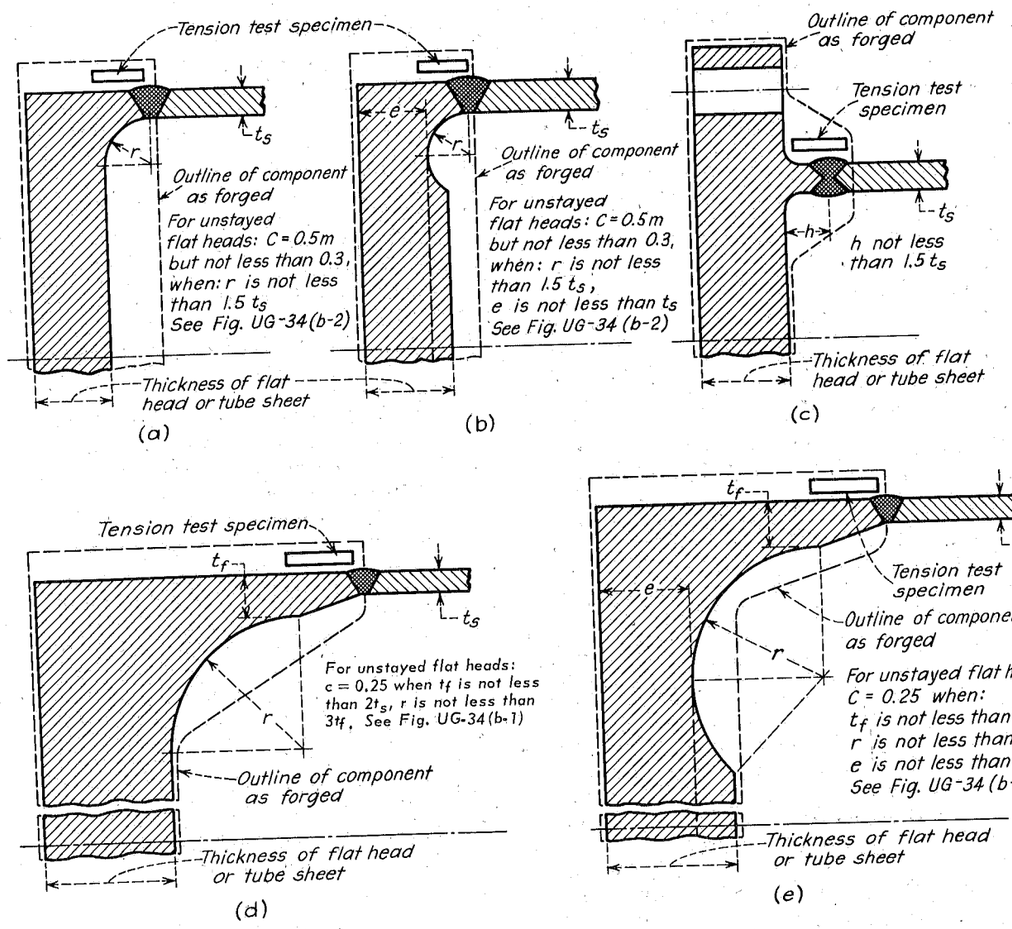

FIG. UW-13.3 TYPICAL FLAT HEADS AND SUPPORTED AND UNSUPPORTED TUBE SHEETS WITH HUBS*
Not permissible if machined from rolled plate

*The tension test specimen may be located, when possible, inside the forged hub, instead of outside as shown.

ments for reinforcement given in Par. UG-37 may be located in a welded joint.

(b) Openings within the limits given in Par. UG-36(c)(3) that do not fully meet the requirements for reinforcement in Par. UG-37 may be located in head-to-shell and other circumferential joints, provided the weld meets the radiographic requirements in Par. UW-51 (i) for a length equal to three times the diameter of the opening with the center of the hole at mid length. Defects that are completely removed in cutting the hole shall not be considered in judging the acceptability of the weld.

(c) When more than two openings not requiring added reinforcing elements in accordance with Par. UG-36(c)(3) are in line in a welded joint, the requirements for joint and ligament efficiency shall be met or the openings shall be reinforced in accordance with Pars. UG-37 and UG-42.

(d) Openings in solid plate that do not require added reinforcing elements in accordance with Par. UG-36(c)(3), shall not be placed closer to the edge of a weld in a main joint than ½ inch for plates 1½ in. thick or less, except when the adjacent weld satisfies the requirements in (b).

UW-15 Welded Connections

(a) Nozzles, other connections, and their reinforcements may be attached to pressure vessels by arc or gas welding. Sufficient welding shall be provided on either side of the line through the center of the opening parallel to the longitudinal axis of the shell to develop the strength of the reinforcing parts as prescribed in Par. UG-41 through shear or tension in the weld, whichever is applicable. The strength of groove welds shall be based in the area subjected to shear or to tension. The strength of fillet welds shall be based on the area subjected to shear (computed on the minimum leg dimension.) The inside diameter of a fillet weld shall be used in figuring its length.

(b) *Stress Values for Weld Metal* The allowable stress values for groove and fillet welds and for shear in nozzle necks, in percentages of stress values for the vessel material, are as follows:

	Per Cent
Nozzle-wall shear	70
Groove-weld tension	74
Groove-weld shear	60
Fillet-weld shear	49

(c) Reinforcing plates and saddles of nozzles attached to the outside of a vessel shall be provided with at least one telltale hole (maximum size ¼ in. pipe tap) that may be tapped for a preliminary compressed-air and soap-suds test for tightness of welds that seal off the inside of the vessel. These telltale holes may be left open or may be plugged when the vessel is in service. If the holes are plugged, the plugging material used shall not be capable of sustaining pressure between the reinforcing plate and the vessel wall.

UW-16 Minimum Requirements for Attachment Welds

(a) *General* The location and minimum size of attachment welds for nozzles and other connections shall conform to the requirements in this paragraph in addition to the strength calculations required in Par. UW-15.

(b) *Symbols* The notations used in this paragraph and in Fig. UW-16.1 and UW-16.2 are defined as follows:

t = nominal thickness of vessel shell or head less corrosion allowance, inches;

t_n = nominal thickness of nozzle wall less corrosion allowance, inches;

t_e = thickness of reinforcing element, inches;

t_w = dimension of partial-penetration attachment welds (fillet, single-bevel, or single-J), measured as shown in Fig. UW-16.1, inches;

t_c = not less than the smaller of ¼ in. or $0.7t_{min}$ (inside corner welds may be further limited by a lesser length of projection of the nozzle wall beyond the inside face of the vessel wall);

t_{min} = the smaller of ¾ in. or the thickness less corrosion allowance of the thinner of the parts joined by a fillet, single-bevel, or single-J weld, inches;

t_1 or t_2 = not less than the smaller of ¼ in. or $0.7\ t_{min}$

(c) *Necks Abutting the Vessel Wall* Necks abutting the vessel wall shall be attached by a full-penetration groove weld. When complete joint penetration cannot be verified by visual inspection or other means permitted in this Division, backing strips or equivalent shall be used with full penetration welds deposited from only one side. (See Fig. UW-16.1(a) and (b).)

Necks or tubes recessed into thick-walled vessels or headers may be welded from only one side by cutting a welding groove in the vessel wall to a depth of not less than t_n on the longitudinal axis of the opening. It is recommended that a recess 1/16 in. deep be provided at the bottom of the groove in which to center the nozzle. The dimension, t_w, of the attachment weld shall be

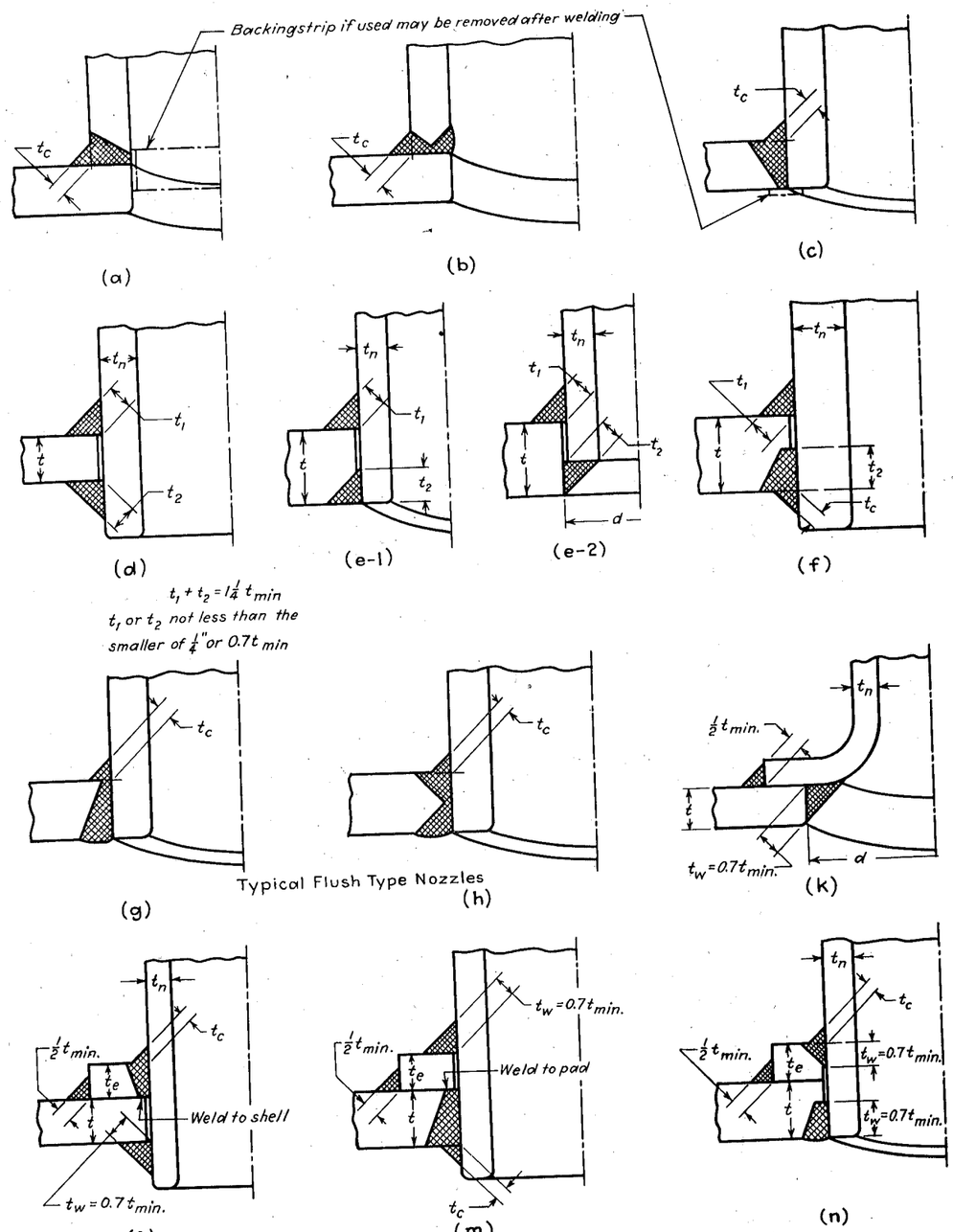

Fig. UW-16.1 Some Acceptable Types of Welded Nozzles and Other Connections to Shells, Drums, and Headers

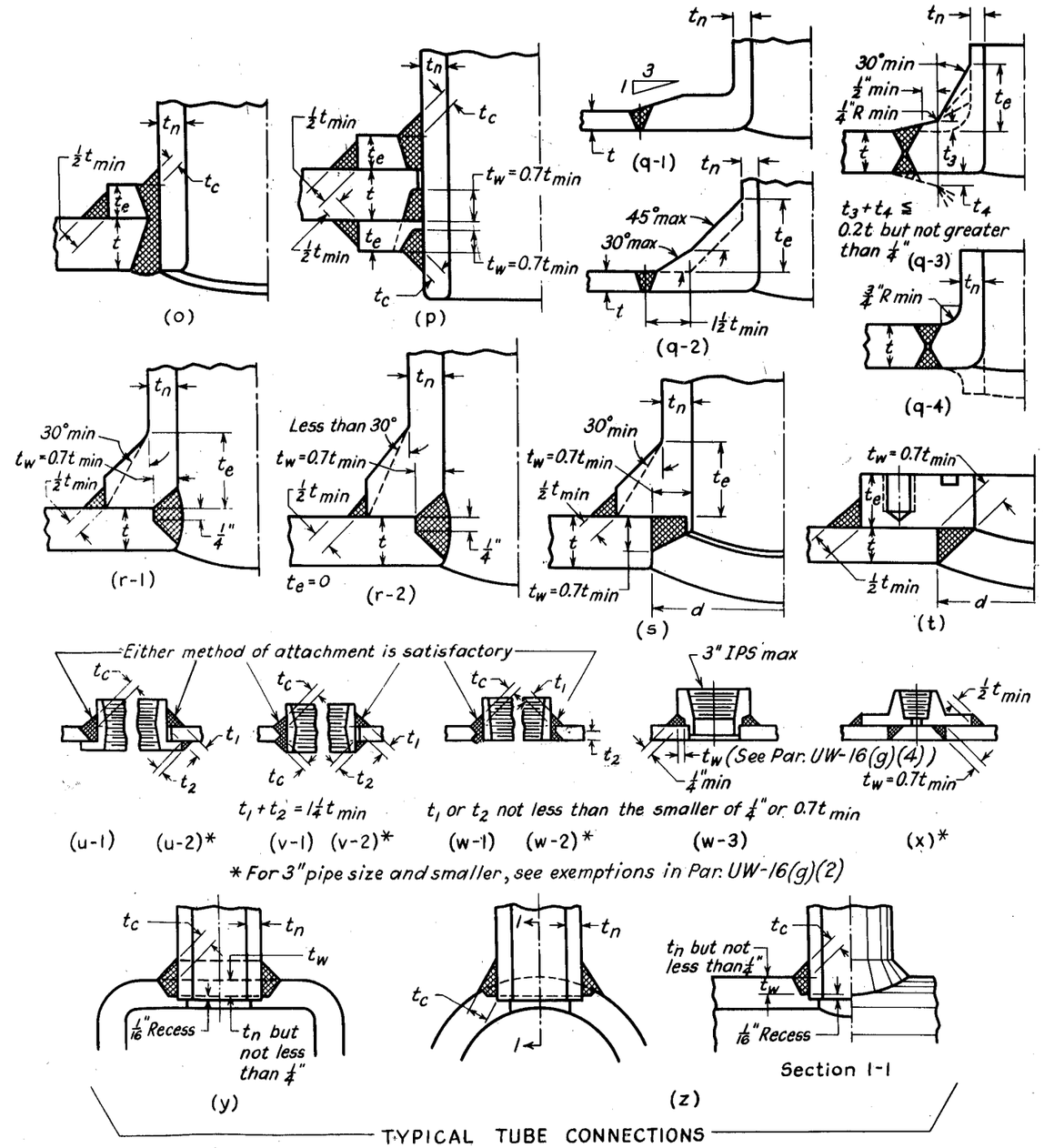

Fig. UW-16.1 (Continued) Some Acceptable Types of Welded Nozzles and Other Connections to Shells, Drums, and Headers

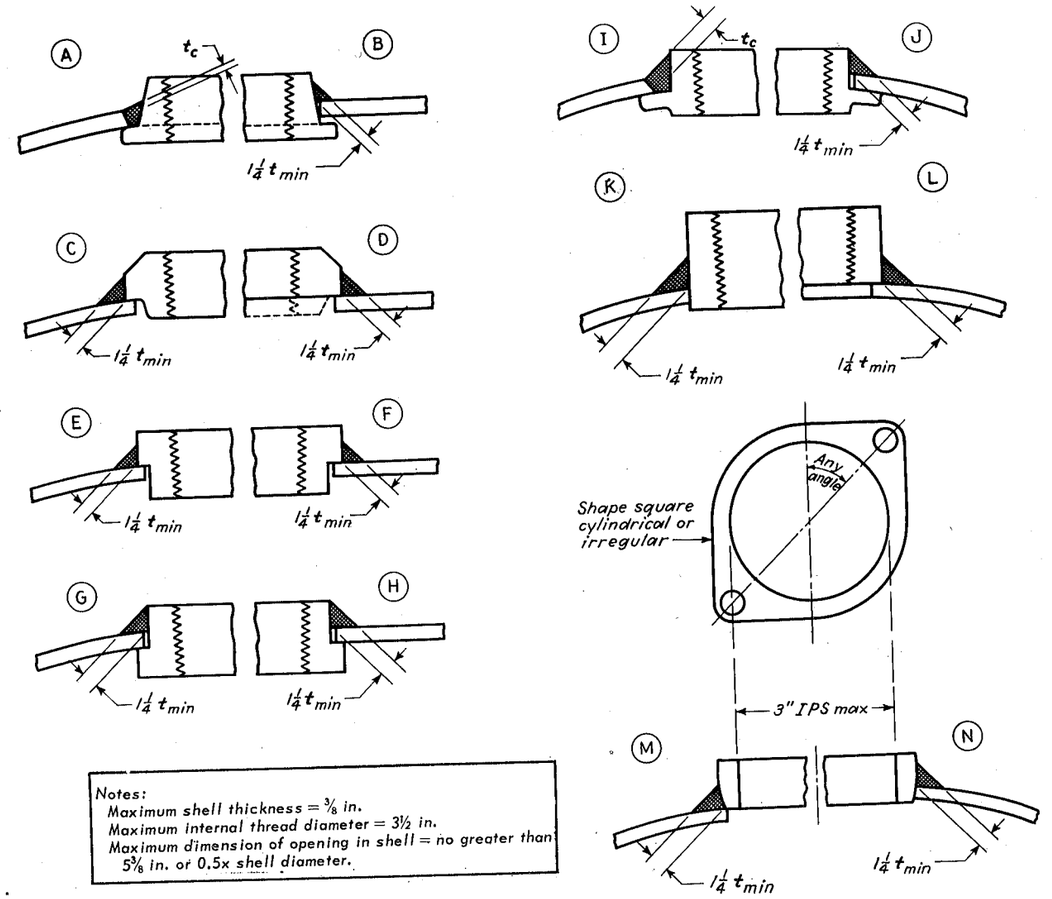

FIG. UW-16.2 SOME ACCEPTABLE TYPES OF SMALL FITTINGS

not less than t_n or less than ¼ in. (For examples see Figs. UW-16.1 (y) and (z).)

(d) *Inserted Necks Without Added Reinforcing Elements* Necks inserted into or through a hole cut in the vessel wall and without additional reinforcing elements shall be attached by a full-penetration groove weld or by two partial-penetration welds, one on each face of the vessel wall. Permissible types of welds are shown in Fig. UW-16.1 (c) to (h).

When complete joint penetration cannot be verified by visual inspection or other means permitted in this Division, backing strips or equivalent shall be used with full penetration welds deposited from only one side. The two partial-penetration welds may be any desired combination of fillet, single-bevel, and single-J welds. The dimension t_w of each weld shall be not less than the smaller of ¼ in. or 0.7 $t_{min.}$ and their sum shall be not less than 1¼ t_{min}. (See Fig. UW-16.1).

(e) *Inserted Necks With Added Reinforcement* Inserted-type necks having added reinforcement in the form of one or more separate reinforcing plates shall be attached by welds at the outer edge of the reinforcement plate and at the nozzle-neck periphery. The weld at the outer edge of the reinforcement shall be a fillet weld with a minimum throat dimension of ½ t_{min}. The welds attaching the neck to the vessel wall and to the reinforcement shall consist of one of the following combinations.

(1) A single-bevel or single-J weld in the shell plate, and a single-bevel or single-J weld in each reinforcement plate. The dimension, t_w, of each weld shall be not less than 0.7 t_{min} (Fig. UW-16.1 (n)).

(2) A full-penetration groove weld in the shell plate, and a fillet, single-bevel, or single-J weld with a weld-dimension, t_w, not less than 0.7 t_{min} in each reinforcement plate (Fig. UW-16.1 (m)).

(3) A full-penetration groove weld in each reinforcement plate, and a fillet, single-bevel, or single-J weld with a weld-dimension, t_w, not less than 0.7 t_{min} in the shell plate (Fig. UW-16.1 (l)).

(f) *Nozzles With Integral Reinforcement* Nozzles and other connections having integral reinforcement in the form of extended necks or saddle-type pads shall be attached by a full-penetration weld or by means of a fillet weld along the outer edge and a fillet, single-bevel, or single-J weld along the inner edge. The throat dimension of the outer weld shall be not less than ½ t_{min}. The dimension, t_w, of the inner weld shall be not less than 0.7 t_{min} (see Fig. UW-16.1 (k), (r), (s), and (t)).

(g) *Fittings With Internal Threads* The attachment of internally threaded fittings shall meet the following requirements:

(1) Except as provided for in (2), (3), and (4), internally threaded fittings shall be attached by a full-penetration groove weld or by two fillet or partial-penetration welds one on each face of the vessel wall. The minimum weld dimensions shall be as shown in Fig. UW-16.1 (u), (v), (w), and (x).

(2) Fittings shown in Fig. UW-16.1 (u-2), (v-2), (w-2), and (x) not exceeding 3 in. pipe size may be attached by welds that are exempt from size requirements other than those specified in Par. UW-15 (a).

(3) (a) Internally threaded fittings and bolting pads not exceeding 3 in. pipe size, as shown in Fig. UW-16.2, may be attached to vessels having a wall thickness not greater than ⅜ in. by a fillet weld, deposited from the outside only. The welds shall comply with the dimensions shown in Fig. UW-16.2. These openings do not require reinforcement other than that inherent in the construction as permitted in Par. UG-36(c)(3).

(b) If the opening exceeds 5¾ in. in any direction, or is greater than one-half the vessel diameter, the part of the vessel affected shall be subjected to a proof test as required in Par. UG-36 (a)(2), or the opening shall be reinforced in accordance with Par. UG-37 and the nozzle or other connection attached, using a suitable detail in Fig. UW-16.1, if welded.

(4) Internally threaded fittings not exceeding 3 in. pipe size may be attached by a fillet groove weld from the outside only as shown in Fig. UW-16.1 (w-3). The groove weld t_w shall not be less than the thickness of schedule 160 pipe (USAS B36.10-1959).

UW-17 Plug Welds

(a) Plug welds may be used in lap joints, in reinforcements around openings and in non-pressure structural attachments. They shall be properly spaced to carry their proportion of the load, but shall not be considered to take more than 30 per cent of the total load to be transmitted.

(b) Plug weld holes shall have a diameter not less than t + ¼ in. and not more than 2t + ¼ in., where t is the thickness in inches of the plate or attached part in which the hole is made.

(c) Plug weld holes shall be completely filled with weld metal when the thickness of the plate, or attached part, in which the weld is made is 5/16 in. or less; for thicker plates or attached parts the holes shall be filled to a depth of at least half the plate thickness or 5/16 of the hole diameter, whichever is larger, but in no case less than 5/16 in.

(d) The allowable working load on a plug weld in either shear or tension shall be computed by the following formula.

$$P = 0.63\, S \left(d - \frac{1}{4}\right)^2$$

where

P = total allowable working load on the plug weld, pounds,

d = the bottom-diameter of the hole in which the weld is made, inches,

S = maximum allowable stress value for the material in which the weld is made, pounds per square inch (see applicable table of stress values in Subsection C).

UW-18 Fillet Welds

(a) Fillet welds may be employed as strength welds for pressure parts within the limitations given in Table UW-12. Particular care shall be taken in the layout of joints in which fillet welds are to be used in order to assure complete fusion at the root of the fillet.

(b) Corner or tee joints may be made with fillet welds provided the plates are properly supported independently of such welds, except that independent supports are not required for joints used for the purposes enumerated in Par. UG-55.

(c) Figs. UW-13.1 and UW-13.2 show several construction details that are not permissible.

(d) The allowable load on fillet welds shall equal the product of the weld area (based on minimum leg dimension), the allowable stress value in tension of the material being welded, and a joint efficiency of 55 per cent.

UW-19 Welded Stayed Construction

(a) Welded-in staybolts shall meet the following requirements:

(1) The arrangement shall conform to one of those illustrated in Fig. UW-19.1;

(2) The required thickness of the plate shall not exceed 1½ in., but if greater than ¾ in., the staybolt pitch shall not exceed 20 in.;

(3) The provisions of Pars. UG-47 and UG-49 shall be followed; and

(4) The required area of the staybolt shall be determined in accordance with the requirements in Par. UG-50.

(b) Welded stays, substantially as shown in Fig. UW-19.2, may be used to stay jacketed unfired pressure vessels provided:

(1) The pressure does not exceed 300 psi;

(2) The required thickness of the plate does not exceed ½ in;

(3) The size of the fillet welds is not less than the plate thickness;

(4) The inside welds are properly inspected before the closing plates are attached;

(5) The allowable load on the fillet welds is computed in accordance with Par. UW-18 (d);

(6) The maximum diameter or width of the hole in the plate does not exceed 1¼ in.;

(7) The welders are qualified under the rules of Section IX of the Code;

(8) The maximum spacing of stays is determined by the formula in Par. UG-47 (a), using:

C = 2.1 if either plate is not over 7/16 in. thick,

C = 2.2 if both plates are over 7/16 in. thick.

(c) Welded stayed construction, consisting of a dimpled or embossed plate welded to another like plate or to a plain plate may be used, provided:

(1) The pressure does not exceed 300 psi;

(2) The welded attachment is made by fillet welds around holes or slots as shown in Fig. UW-19.2 and is calculated in accordance with paragraph (b);

(3) The maximum allowable working pressure of the dimpled or embossed components is established in accordance with the requirements of Par. UG-101;

(4) The plain plate, if used, shall meet the requirements for braced and stayed surfaces.

(d) The welds need not be radiographed, nor need they be postweld heat treated unless the vessel or vessel part in which they occur is required to be postweld heat treated.

FABRICATION

UW-26 General

(a) The rules in the following paragraphs apply specifically to the fabrication of pressure vessels and vessel parts that are fabricated by welding and shall be used in conjunction with the general requirements for *Fabrication* in Subsection A, and with the specific requirements for *Fabrication* in Subsection C that pertain to the class of material used.

(b) Each manufacturer or contractor shall be responsible for the quality of the welding done by his organization and shall conduct tests not only of the welding procedure to determine its suitability to insure welds which will meet the required tests, but also of the welders and welding operators to determine their ability to apply the procedure properly.

(c) No production work shall be undertaken until both the welding procedure and the welders or welding operators have been qualified.

UW-27 Welding Processes

The welding processes that may be used in the construction of vessels under this Part of this Division are restricted as follows:

(1) Arc or gas welding processes are restricted to shielded metal arc, submerged arc, gas metal arc, gas tungsten-arc, atomic hydrogen metal arc, oxyhydrogen and oxyacetylene. No mechanical pressure or blows shall be applied except as permitted for peening in Par. UW-39.

(2) Pressure-welding processes are restricted to flash, induction, resistance, pressure thermit and pressure gas.

UW-28 Qualification of Welding Procedure

(a) Each procedure of welding that is to be followed in construction shall be recorded in detail by the manufacturer.

(b) Each such welding procedure shall be qualified in accordance with the provisions of Section IX of the Code insofar as they apply. Only qualified Procedure Specifications shall be followed in construction.

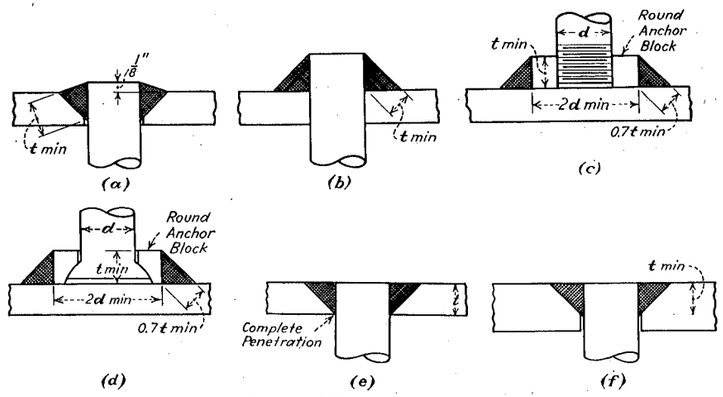

NOTE = t equals nominal thickness of the thinner stayed plate

FIG. UW-19.1 TYPICAL FORMS OF WELDED STAYBOLTS

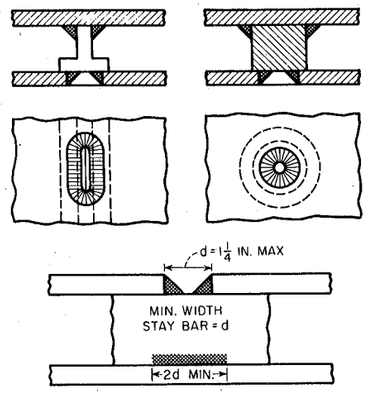

FIG. UW-19.2 USE OF PLUG AND SLOT WELDS FOR STAYING PLATES

(c) Each manufacturer shall conduct the required tests to qualify all welding procedures to be used by his organization.

UW-29 Tests of Welders and Welding Operators

(a) All welders assigned to manual welding shall have passed the tests prescribed for welder qualification in Section IX of the Code. All operators assigned to machine welding equipment shall have passed the examination prescribed in Par. Q-21 or QN-21 of Section IX. Such tests shall be conducted by the manufacturer or contractor.

(b) Each welder and welding operator shall be assigned an identifying number, letter, or symbol by the manufacturer which shall be used to identify the work of that welder or welding operator.

(c) The manufacturer shall maintain a record of the welders and welding operators employed by him showing the date and result of tests and the identification mark assigned to each. These records shall be certified to by the manufacturer and be accessible to the inspector.

(d) The test conducted by one manufacturer shall not qualify a welder or welding operator to do work for any other manufacturer.

UW-30 Lowest Permissible Temperatures for Welding

It is recommended that no welding of any kind be done when the temperature of the base metal is lower than 0 F. At temperatures between 32 F and 0 F, the surface of all areas within three inches of the point where a weld is to be started should be heated to a temperature at least warm to the hand (estimated to be above 60 F) before welding is started. It is recommended also that no welding be done when surfaces are wet or covered with ice, when snow is falling on the surfaces to be welded, or during periods of high wind, unless the welders or welding operators and the work are properly protected.

UW-31 Cutting, Fitting, and Alignment

(a) When plates are shaped by oxygen or arc cutting, the edges to be welded shall be uniform and smooth and shall be freed of all loose scale and slag accumulations before welding (see Pars. UG-76 and UCS-5).

(b) Plates that are being welded shall be fitted, aligned, and retained in position during the welding operation.

(c) Bars, jacks, clamps, tackwelds, or other appropriate means may be used to hold the edges to be welded in line. Tackwelds may be used, provided those in plates over ¼ in. thick are removed by suitable means so that they do not become part of the joint.

(d) The edges of butt joints shall be held during welding so that the tolerances of Par. UW-33 and UW-34 are not exceeded in the completed joint. When fitted girth joints have deviations exceeding the permitted tolerances, the head or

shell ring, whichever is out-of-true, shall be reformed until the errors are within the limits specified. Where fillet welds are used, the lapped plates shall fit closely and be kept in contact during welding.

UW-32 Cleaning of Surfaces to Be Welded

(a) The surfaces to be welded shall be clean and free from foreign material such as grease, oil, lubricants and marking paints for a distance of at least ½ in. from the welding edge for ferrous materials and at least 2 in. for nonferrous materials. Detrimental oxide shall be removed from the weld metal contact area. When weld metal is to be deposited over a previously welded surface, all slag shall be removed by a roughing tool, chisel, air chipping hammer, or other suitable means so as to prevent inclusion of impurities in the weld metal.

(b) Cast surfaces to be welded shall be machined, chipped, or ground, to remove foundry scale and to expose sound metal.

UW-33 Alignment Tolerance

(a) Alignment of sections at edges to be butt welded shall be such that the maximum offset is not greater than the applicable amount as listed in the following Table, where t is the nominal thickness of the thinner section at the joint.

Section Thickness In Inches	Direction of Joints In Cylindrical Shells: Longitudinal	Direction of Joints In Cylindrical Shells: Circumferential
Up to ½, incl.	¼ t	¼ t
Over ½ to ¾, incl.	⅛ in.	¼ t
Over ¾ to 1½, incl.	⅛ in.	3/16 in.
Over 1½ to 2, incl.	⅛ in.	⅛ t
Over 2	Lesser of 1/16 t or ⅜ inch	Lesser of ⅛ t or ¾ inch

(b) Joints in spherical vessels and within heads and joints between cylindrical shells and hemispherical heads shall meet the requirements in (a) above for longitudinal joints in cylindrical shells.

(c) Any offset within the allowable tolerance provided above shall be faired at a 3 to 1 taper over the width of the finished weld, or if necessary, by adding additional weld metal beyond what would otherwise be the edge of the weld.

UW-35 Finished Longitudinal and Circumferential Joints

(a) Butt joints shall have complete joint penetration and complete fusion for the full length of the weld and shall be free from undercuts, overlaps, or abrupt ridges or valleys.[1] To assure that the weld grooves are completely filled so that the surface of the weld metal at any point does not fall below the surface of the adjoining plate, weld metal may be built up as reinforcement on each side of the plate. The thickness of the reinforcement on each side of the plate shall not exceed the following thicknesses:

Plate Thickness, in.	Maximum Thickness of Reinforcement, in.
Up to ½, incl.	3/32
Over ½ to 1, incl.	⅛
Over 1	3/16

The reinforcement need not be removed except to the extent that it exceeds the permissible thickness or when required by Par. UW-51.

(b) When a single-welded butt joint is made by using a backing strip which is left in place (Type No. (2) of Table UW-12), the requirement for reinforcement applies only to the side opposite the backing strip.

UW-36 Fillet Welds

In making fillet welds, the weld metal shall be deposited in such a way that adequate penetration into the base metal at the root of the weld is secured.

UW-37 Miscellaneous Welding Requirements

(a) The reverse side of double-welded joints shall be prepared by chipping, grinding, or melting out, so as to secure sound metal at the base of weld metal first deposited, before applying weld metal from the reverse side.

(b) The requirements in (a) are not intended to apply to any process of welding by which proper fusion and penetration are otherwise obtained and by which the base of the weld remains free from impurities.

(c) If the welding is stopped for any reason, extra care shall be taken in restarting to get the required penetration and fusion. For submerged arc welding, chipping out a groove in the crater is recommended.

(d) Where single-welded joints are used, particular care shall be taken in aligning and separating the components to be joined so that there will be complete penetration and fusion at the bottom of the joint for its full length.

(e) In welding plug welds, a fillet around the bottom of the hole shall be deposited first.

[1] If the reinforcement is built up so as to form a ridge with a valley or depression in the weld at the edge next to the plate, the result is a notch that causes concentration of stress and reduces the strength of the joint.

(f) Each welder and welding operator shall stamp the identifying number, letter, or symbol, assigned by the manufacturer, adjacent to and at intervals of not more than 3 ft along the welds which he makes in steel plates ¼ in. and over in thickness and in nonferrous plates ½ in. and over in thickness; or a record shall be kept by the manufacturer of welders and welding operators employed on each joint which shall be available to the inspector. For identifying welds on vessels in which the wall thickness is less than ¼ in. for steel material and less than ½ in. for nonferrous material, suitable stencil or other surface markings shall be used; or a record shall be kept by the manufacturer of welders and welding operators employed on each joint which shall be available to the inspector.

UW-38 Repair of Weld Defects

Visible defects, such as cracks, pinholes, and incomplete fusion, and defects detected by the hydrostatic test or by the examinations prescribed in Pars. UW-51 and UW-52 shall be removed by mechanical means, or by oxygen grooving, after which the joint shall be rewelded. (See Par. UW-40 (d) and Thermal Cutting in Appendix NF.)

UW-39 Peening

The weld metal may be peened when it is deemed necessary or helpful to control distortion, to relieve residual stresses, or to improve the quality of the weld.

UW-40 Procedures for Postweld Heat Treatment

(a) The operation of postweld heat treatment shall be performed in accordance with the requirements given in the applicable Part in Subsection C using one of the following procedures:

(1) Heating the vessel as a whole in an enclosed furnace. This procedure is preferable and should be used whenever practicable;

(2) Heating the vessel in more than one heat in a furnace, provided the overlap of the heated sections of the vessel is at least 5 ft. When this procedure is used the portion outside of the furnace shall be shielded so that the temperature gradient is not harmful;

(3) Heating of shell sections and/or portions of vessels to postweld heat treat longitudinal joints or complicated welded details before joining to make the completed vessel. When the vessel is required to be postweld heat treated, and it is not practicable to postweld heat treat the completed vessel as a whole or in two or more heats as provided in (2), any circumferential joints not previously postweld heat treated may be thereafter locally postweld heat treated by heating such joints by any appropriate means that will assure the required uniformity. The width of the heated band on each side of the greatest width of finished weld shall be not less than two times the shell thickness. The portion outside the heating device shall be protected so that the temperature gradient is not harmful. This procedure may also be used to postweld heat treat portions of new vessels after repairs;

(4) Heating the vessel internally by any appropriate means and with adequate indicating and recording temperature devices to aid in the control and maintenance of a uniform distribution of temperature in the vessel wall. Previous to this operation, the vessel should be fully enclosed with insulating material, or the permanent insulation may be installed provided it is suitable for the required temperature. In this procedure the internal pressure should be kept as low as practicable, but shall not exceed 50 per cent of the maximum allowable working pressure at the highest metal temperature expected during the postweld heat treatment period;

(5) Heating a circumferential band containing nozzles or other welded attachments that require postweld heat treatment in such a manner that the entire band shall be brought up uniformly to the required temperature and held for the specified time. The circumferential band shall extend around the entire vessel, shall include the nozzle or welded attachment, and shall extend at least six times the plate thickness beyond the welding which connects the nozzle or other attachment to the vessel. The portion of the vessel outside of the circumferential band shall be protected so that the temperature gradient is not harmful;

(6) Heating the circumferential joints of pipe or tubing by any appropriate means over a band having a width on each side of the center line of not less than three times the greatest width of the finished weld. The portion outside of the heated band shall be protected so that the temperature gradient is not harmful.

(b) The temperatures and rates of heating and cooling to be used in postweld heat treatment of vessels constructed of materials for which postweld heat treatment may be required are given in Pars. UCS-56 and UHA-32.

(c) The minimum temperature for postweld heat treatment given above shall be the minimum temperature of the plate material of the shell or head of any vessel. Where more than one pressure vessel or pressure vessel part are postweld heat treated in one furnace charge, thermocouples shall

be placed on vessels at the bottom, center, and top of the charge, or in other zones of possible temperature variation so that the temperature indicated shall be the true temperature for all vessels or parts in those zones.[1]

(d) Postweld heat treatment, when required, shall be done before the hydrostatic test and after any repairs to welding. A preliminary hydrostatic test to reveal leaks prior to postweld heat treatment is permissible.

(e) Vessels of different thicknesses may be postweld heat treated in the same furnace charge according to the postweld heat treatment requirements for the thickest vessel in the charge.

UW-41 Sectioning of Welded Joints

Welded joints may be inspected by sectioning when agreed to by user and manufacturer, but this inspection shall not be considered a substitute for spot-radiographic-examination. This type of inspection has no effect on the joint factors in Table UW-12. The method of closing the hole by welding is subject to approval by the inspector. Some acceptable methods are given in Appendix K.

INSPECTION AND TESTS

UW-46 General

The rules in the following paragraphs apply specifically to the inspection and testing of pressure vessels and vessel parts that are fabricated by welding and shall be used in conjunction with the general requirements for *Inspection and Tests* in Subsection A, and with the specific requirements for *Inspection and Tests* in Subsection C that pertain to the class of material used. (For tests on reinforcing plates see Par. UW-15 (c).

UW-47 Check of Welding Procedure

The inspector shall assure himself that the welding procedure employed in the construction of a vessel has been qualified under the provisions of Section IX of the Code. The manufacturer shall submit evidence to the inspector that the requirements have been met.

UW-48 Check of Welder and Welding Operator Qualifications

(a) The manufacturer shall certify that the welding on a vessel has been done only by welders and welding operators who have been qualified under the requirements of Section IX and the inspector shall assure himself that only qualified welders and welding operators have been used.

(b) The manufacturer shall make available to the inspector a certified copy of the record of the qualification tests of each welder and welding operator. The inspector shall have the right at any time to call for and witness tests of the welding procedure or of the ability of any welder and welding operator.

UW-49 Check of Postweld Heat Treatment Practice

The inspector shall satisfy himself that all postweld heat treatment has been correctly performed and that the temperature readings conform to the requirements.

UW-50 Inspection of Welds on Pneumatically Tested Vessels

On welded pressure vessels to be pneumatically tested in accordance with Par. UG-100, the full length of the following welds shall be examined for the purpose of detecting possible cracks:

(a) All welds around openings;

(b) All attachment welds, including welds attaching non-pressure parts to pressure parts, having a throat thickness greater than ¼ in.

Examination shall be by magnetic particle or liquid penetrant methods when the material is ferro-magnetic, or by the liquid penetrant method when the material is non-magnetic.

UW-51 Technique for Radiographic Examination of Welded Joints

(a) All welded joints to be radiographed shall be prepared as follows:

The weld ripples or weld surface irregularities, on both the inside and outside, shall be removed by any suitable mechanical process to such a degree that the resulting radiographic contrast due to any irregularities cannot mask or be confused with the image of any objectionable defect. Also the weld surface shall merge smoothly into the plate surface. The finished surface of the reinforcement of all butt welded joints may be flush with the plate or may have a reasonably uniform crown not to exceed the following thickness:

Plate Thickness Inches	Thickness of Reinforcement Inches
Up to ½ in.	1/16
Over ½ in. to 1	3/32
Over 1 to 2	1/8
Over 2	5/32

[1] Furnace gas temperature measurement alone is not considered sufficiently accurate.

(b) The weld shall be radiographed with a technique which will have sufficient sensitivity to indicate the features of the penetrameter as described in Par. UW-51(c)(8), using a penetrameter of the specified thickness for the thickness of the weld being examined. The size and shape of the penetrameter shall be substantially as shown on Fig. UW-51. These dimensions apply to the penetrameter itself and not to its projected image on the radiograph. The image will be enlarged to some degree on the film. It is recommended that penetrameters be protected by being embedded in plastic.

The thickness of the penetrameter shall be as shown in Table UW-51.

Standard penetrameters shall be limited to the thickness in Table UW-51 and identified by number in symbols at least $^3/_{32}$ in. high.

TABLE UW-51
STANDARD PENETRAMETER SIZES

Weld Thickness Range (in.)	Thickness of Penetrameter on Source Side (in.)	Designation on Penetrameter	Thickness of Penetrameter on Film Side (in.)	Designation on Penetrameter
Up to ¼ incl.	0.005	5	0.005	5
Over ¼ thru ⅜	0.0075	7	0.0075	7
Over ⅜ thru ½	0.010	10	0.010	10
Over ½ thru ⅝	0.0125	12	0.010	10
Over ⅝ thru ¾	0.015	15	0.012	12
Over ¾ thru ⅞	0.0175	17	0.015	15
Over ⅞ thru 1	0.020	20	0.017	17
Over 1 thru 1¼	0.025	25	0.020	20
Over 1¼ thru 1½	0.030	30	0.025	25
Over 1½ thru 2	0.035	35	0.030	30
Over 2 thru 2½	0.040	40	0.030	30
Over 2½ thru 3	0.045	45	0.035	35
Over 3 thru 4	0.050	50	0.040	40
Over 4 thru 6	0.060	60	0.050	50
Over 6 thru 8	0.080	80	0.060	60
Over 8 thru 10	0.100	100	0.080	80
Over 10 thru 12	0.120	120	0.100	100
Over 12 thru 16	0.160	160	0.120	120
Over 16 thru 20	0.200	200	0.160	160

(c) As a check on the radiographic technique employed, penetrameters, as herein described, shall be used in the following manner to determine whether the requirements are being met.

(1) The radiographic quality shall be evaluated by the image of a properly located penetrameter.

(2) A standard source side penetrameter of the thickness shown in Table UW-51 shall be placed on the side nearest the radiation source. Where it is physically impossible to do this, a film side penetrameter shall be placed on the film side of the joint, and its thickness shall conform to Table UW-51, and a lead letter "F" at least ½ in. high shall be placed adjacent to the penetrameter.

(3) One penetrameter shall be used for each exposure, to be placed so that the plane of the penetrameter is normal to the radiation beam. Each penetrameter shall represent an area of essentially uniform radiographic density as judged by density comparison strips or a densitometer. If the film density through the weld varies more than minus 15 or plus 30 per cent from the density through the penetrameter, then an additional penetrameter will be required for the exceptional area or areas. If the requirements of Par. 8 are met by two penetrameters, one a penetrameter appearing in the lightest area of a film, and the other in the darkest, the intervening film shall be considered as having acceptable density. It is not necessary that these additional penetrameters be normal to the radiation at their locations. The H. & D.[1] density through acceptable weld metal shall be 1.3 minimum for single film viewing, and 1.8 minimum for composite viewing of double film exposures.

(4) The material of the penetrameter shall be radiographically similar to that of the filler metal under examination. For example, any steel, preferably stainless, may be used for steel; and aluminum for aluminum, etc. If the filler metal is not radiographically similar to the base material, then the penetrameter may be placed over the filler metal.

(5) The penetrameter shall be placed adjacent to the weld seam except as provided for in Par. (4). If the weld reinforcement, and/or backing strip, is not removed, a shim of a radiographically similar material to the filler metal shall be placed under the penetrameter. The shim thickness shall be selected so that the total thickness being radiographed under the penetrameter is the same as the total weld thickness (including backing strip if used and not removed). The penetrameter thickness shall be based on the total metal thickness under the penetrameter including shims.

(6) In each penetrameter there shall be three holes, one of which shall be of diameter equal to twice the nominal penetrameter thickness (2T) but not less than $^1/_{16}$ in. The diameter of the two remaining holes shall be selected by the manufacturer; they will ordinarily be equal to three (3T) and four times (4T) the penetrameter thickness but they need not be smaller than $^1/_{16}$ in.; but smaller holes are permitted.

These holes shall be true and normal to the surface and not chamfered. For weld thickness less than ½ in., the penetrameter shall also contain a slit ¼ in. long by 0.010 in. wide. The long dimension of this slit is to be placed parallel to the longitudinal direction of the weld.

(7) The holes, or in the range where the slit is required, then the slit shall be delineated on the radiograph as defined in Par. UW-51(c)(8).

(8) The images of the identifying numbers, of the penetrameter outline, and of the 2T hole are all essential indexes of image quality on the radiograph, and they shall appear clearly on the radiograph; except that for penetrameters 5, 7 and 10 the slit shall appear clearly and the hole need not appear.

(d) When the source is placed on the axis of the joint and the complete circumference is radiographed with a single exposure, at least three uniformly spaced penetrameters shall be employed.

(e) All radiographs shall be free from excessive mechanical, chemical, or other processing defects that could interfere with proper interpretation of the radiograph.

(f) Identification markers, the images of which will appear on the film, shall be placed adjacent to the weld on the part, not on the film, and their locations shall be marked on the surface near the weld, in such a manner so that a defect appearing on a radiograph may be accurately located; and in such a manner that it is evident on the film that complete coverage of the weld has been obtained.

(g) The job number, the vessel, the seam, and the manufacturer's identification symbol or name shall be plainly indicated on each film.

(h) The radiographs shall be submitted to the inspector with such information regarding the radiographic technique as he may request.

(i) Sections of weld that are shown by radiography to have any of the following types of imperfections shall be judged unacceptable and shall be repaired as provided in Par. UW-38 and the repair radiographed to UW-51.

(1) Any type of crack, or zone of incomplete fusion or penetration;

(2) Any elongated slag inclusion which has length greater than

¼ in. for T up to ¾ in.
$^1/_3$ T for T from ¾ in. to 2¼ in.
¾ in. for T over 2¼ in.

where T is the thickness of the weld;

(3) Any group of slag inclusions in line that have an aggregate length greater than T in a length of $12T$, except when the distance between the successive imperfections exceeds $6L$ where L is the length of the longest imperfection in the group;

(4) Porosity in excess of that specified by the acceptance standards given in Appendix IV.

(j) A complete set of radiographs for each job shall be retained by the manufacturer and kept on file for a period of at least five years.

UW-52 Spot-Examination of Welded Joints

NOTE: Spot radiographing of a welded joint is recognized as an effective inspection tool. The spot radiography rules are also considered to be an aid to quality control. Spot radiographs made directly after a welder or an operator has completed a unit of weld proves that the work is or is not being done in accordance with a satisfactory procedure. If the work is unsatisfactory, corrective steps can then be taken to improve the welding in the subsequent units, which unquestionably will improve the weld quality.

Spot radiography in accordance with these rules will not insure a fabrication product of predetermined quality level throughout. It must be realized that an accepted vessel under these spot radiography rules may still contain defects which might be disclosed on further examination. If all radiographically disclosed unacceptable weld defects must be eliminated from a vessel, then 100 per cent radiography must be employed.

(a) Vessels and parts of vessels that have butt-welded joints that are not radiographed for their full length and which are required to be spot-examined by other paragraphs of this Division shall be examined locally by spot-radiographing as provided herein, except for those vessels or parts of vessels designed for external pressure only.

[1] Hurter-Driffield method of defining quantitative blackening of the film.

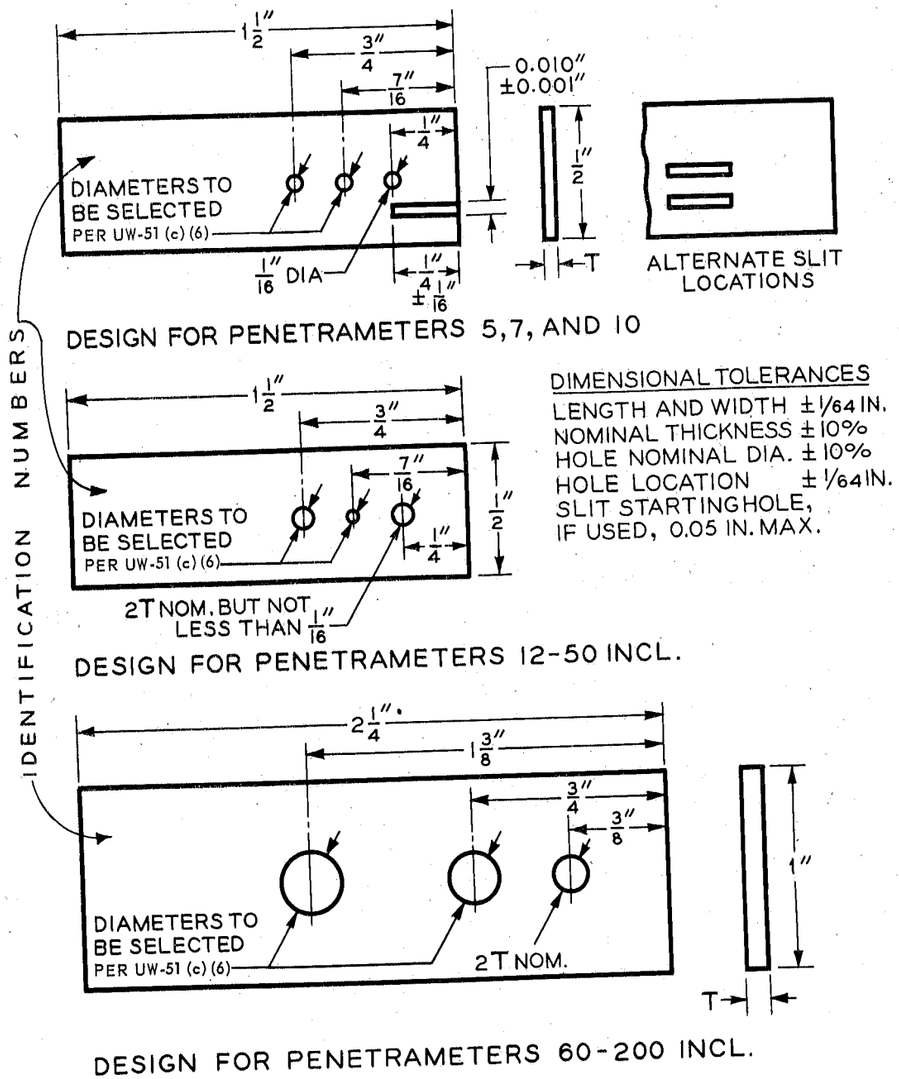

FIG. UW-51 PENETRAMETER (IMAGE QUALITY INDICATOR)

(b) *Minimum Extent of Spot Radiographic Examination*

(1) One spot shall be examined in the first 50 feet of welding in each vessel and one spot shall be examined for each additional 50 feet of welding or fraction thereof, except that when identical vessels, individually of less than 50 foot seam length, are being fabricated under the rules of this paragraph, 50 foot increments of welding may be represented by one spot-examination.

(2) Such additional spots as may be required shall be selected so that an examination is made of the welding of each welding operator or welder. Under conditions where two or more welders or welding operators make weld layers in a joint, or on the two sides of a double welded butt joint, one spot-examination may represent the work of both welders or welding operators.

(3) Each spot-examination shall be made as soon as practicable after the completion of the increment of weld that is to be examined. The location of the spot shall be chosen by the inspector except that when the inspector has been duly notified in advance and cannot be present or otherwise make the selection, the fabricator may exercise his own judgment in selecting the spots.

(c) *Standards for Spot Radiographic Examination* Spot-examination by radiography shall be made in accordance with the technique prescribed in Par. UW-51. The minimum length of spot radiograph shall be 6 in. Spot radiographs may be retained or be discarded by the manufacturer after acceptance of the vessel by the inspector. The acceptability of welds examined by spot-radiography shall be judged by the following standards:

(1) Welds in which the radiograph shows any type of crack, or zone of incomplete fusion or penetration shall be unacceptable.

(2) Welds in which the radiographs show slag inclusions or cavities shall be unacceptable if the length of any such imperfection is greater than $\frac{2}{3}$ T where T is the thickness of the thinner plate welded. If several imperfections within the above limitations exist in line, the welds shall be judged acceptable if the sum of the longest dimensions of all such imperfections is not more than T in a length of $6T$ (or proportionately for radiographs shorter than $6T$) and if the longest imperfections considered are separated by at least $3L$ of acceptable weld metal, where L is the length of the longest imperfection. The maximum length of acceptable imperfection shall be ¾ in. Any such imperfections shorter than ¼ in. shall be acceptable for any plate thickness.

(3) Porosity is not a factor in the acceptability of welds not required to be fully radiographed.

(d) *Evaluation and Retests*

(1) When a spot, radiographed as required in Pars. (b)(1) or (b)(2), is acceptable in accordance with Pars. (c)(1) and (c)(2), the entire weld length represented by this radiograph is acceptable.

(2) When a spot, radiographed as required in Pars. (b)(1) or (b)(2), has been examined and the radiograph discloses welding which does not comply with the minimum quality requirements of Pars. (c)(1) and (c)(2), two additional spots shall be radiographically examined in the same weld unit at locations away from the original spot. The locations of these additional spots shall be determined by the inspector or fabricator as provided for the original spot examination in Par. (b)(3).

(a) If the two additional spots examined show welding which meets the minimum quality requirements of Pars. (c)(1) and (c)(2), the entire weld unit represented by the three radiographs is acceptable. The defective welding disclosed by the first of the three radiographs may be removed and the area repaired by welding, or it may be allowed to remain in the weld joint, at the discretion of the inspector.

(b) If either of the two additional spots examined shows welding which does not comply with the minimum quality requirements of Pars. (c)(1) and (c)(2), the entire unit of weld represented shall be rejected. The entire rejected weld shall be removed and the joint shall be rewelded or, at the fabricator's option, the entire unit of weld represented shall be completely radiographed and defective welding only need be corrected.

(c) Repair welding shall be performed using a qualified procedure and in a manner acceptable to the inspector. The rewelded joint, or the weld repaired areas shall be spot radiographically examined at one location in accordance with the foregoing requirements of UW-52.

STAMPING AND REPORTS

UW-60 General

The provisions for stamping and reports, Pars. UG-115 through UG-120, shall apply without supplement to welded pressure vessels.

PRESSURE-RELIEF DEVICES

UW-65 General

The provisions for pressure-relief devices, Pars. UG-125 through UG-134, shall apply without supplement to welded pressure vessels.

Part UR

Requirements for Pressure Vessels Fabricated by Riveting[1]

GENERAL

UR-1 Scope

The rules in Part UR are applicable to pressure vessels and vessel parts that are fabricated by riveting or by closely fitted bolting and shall be used in conjunction with the general requirements in Subsection A, and with the specific requirements in Subsection C that pertain to the class of material used.

MATERIALS

UR-5 General

Materials entering into the construction of riveted pressure vessels shall comply with the requirements for materials given in Pars. UG-5 through UG-13.

UR-6 Rivets and Bolts

(a) Material for rivets and bolts shall comply with the requirements in Subsection C for the class of material used.

(b) Rivets should be of material closely similar to the plate material being assembled.

(c) Bolts and nuts may be of any of the materials permitted by this Division but precautions should be taken to avoid excessive galvanic corrosion (see Appendix NF).

DESIGN

UR-10 General

(a) The rules in the following paragraphs apply specifically to the design of pressure vessels and vessel parts that are fabricated by riveting and shall be used in conjunction with the general requirements for *Design* in Subsection A, and with the specific requirements for *Design* in Subsection C that pertain to the class of material used.

(b) *Minimum Thickness of Plate* The minimum thickness, after forming, of any plate in a riveted vessel which is subject to pressure, shall be 3/16 in., exclusive of corrosion allowance, except as otherwise provided in Par. UCS-16 (b), UNF-16 (b) and UHA-20 (b).

[1] Closely fitted bolting is included under riveting.

UR-11 Strength of Rivets

The maximum allowable stress in tension and in shear for rivets, and bolts used instead of rivets, shall be 80 per cent of the maximum allowable stress value prescribed in Subsection C for the material at the operating metal temperature. The maximum allowable stress in bearing shall be twice that permitted for shear.

UR-12 Crushing Strength of Plates

The maximum allowable stress for resistance to crushing of plates shall be 160 per cent of the maximum allowable stress value prescribed in Subsection C for the material at the operating temperature.

UR-13 Corrosion Allowance

(a) Provision shall be made for corrosion in accordance with the requirements in Par. UG-25.

(b) The plate thickness in excess of that computed for a seamless vessel, taking into account the applicable loadings in Par. UG-22, may be taken as allowance for corrosion in vessels that have longitudinal joints of double-strap butt-joint construction. Additional corrosion allowance shall be provided when needed, particularly on the inner buttstraps.

(c) The use of swell-neck rivets with oversize heads is recommended when anticipated corrosion conditions are such that the loss of metal from standard heads of rivets may impair the strength or tightness of the vessel during its expected life.

UR-14 Thickness of Buttstraps

(a) The minimum thickness of a buttstrap for a double-strap riveted joint shall be as given in Table UR-14. Intermediate values may be determined by interpolation. For a shell-plate thickness exceeding 1¼ in., the thickness of the buttstrap shall be not less than two-thirds of the thickness of the shell plate.

TABLE UR-14
MINIMUM THICKNESS OF BUTT STRAPS

Thickness of shell plate, in. (without corrosion allowance)	Minimum thickness[1] of butt straps, in.
3/16	3/16
1/4	1/4
9/32	1/4
5/16	1/4
11/32	1/4
3/8	5/16
13/32	5/16
7/16	3/8
15/32	3/8
1/2	7/16
7/32	7/16
9/16	7/16
5/8	1/2
3/4	1/2
7/8	5/8
1	11/16
1 1/8	3/4
1 1/4	7/8

[1] The same corrosion allowance is to be added to the thickness and edges of inside buttstraps as is used for the shell plate.

(b) The minimum thickness of a buttstrap for a single-strap joint shall be twice that given in Table UR-14, except that on a circumferential joint a buttstrap need not be thicker than the shell plate.

UR-15 Joint Efficiency

(a) The efficiency of a riveted joint is the ratio which the working strength of the joint bears to the working strength of the solid plate away from the joint. When the plates of a lap joint are not the same in thickness, the joint efficiency shall be based on the thickness of the thinner plate.

(b) The efficiency of a riveted joint is determined by calculating the working strength of a unit length of the joint, considering each possible mode of failure separately, using the allowable stresses specified in Pars. UR-11 and UR-12 for net tension, shear, and crushing strength, respectively, or any combination thereof and dividing the lowest result by the working strength of an equivalent width of the solid plate away from the joint. In calculating joint efficiency, the plate thickness to be used shall be net, after corrosion allowance has been deducted from all plates subject to corrosion. In the computations, the diameter of the rivet shall be assumed as the nominal diameter of the finished holes.

UR-16 Longitudinal Joints

The longitudinal joints of a shell which exceeds ½ in. in thickness shall be of double-strap butt-type construction. This rule need not apply to the portion of a shell which is fully staybolted to an inner plate.

UR-17 Circumferential Joints

(a) The strength of a circumferential joint in a pressure vessel, the heads of which are not stayed by tubes or through braces, shall be at least one-half of that required for the longitudinal joint.

(b) When the heads in a vessel are stayed by tubes or through stays which support at least one-half of the load acting on the head, the minimum strength of the circumferential joints in the shell shall be at least one-third of that required for the intersecting longitudinal joint.

UR-18 Lap Joints

(a) Longitudinal shell joints and radial head joints of the lap or single-strap butt-type, and circumferential joints of the single-riveted lap-type, shall not be used for an actual plate thickness exceeding ½ in., except as otherwise permitted in (b) and (c), nor for metal temperatures which during normal operation may exceed the limiting temperature prescribed in Subsection C for the material used (see Pars. UCS-18 and UNF-18).

(b) When a vessel is used for a purpose that makes it necessary to provide in its construction for extraordinary wear, corrosion, or other deterioration in service, and plates of greater thickness are used than would otherwise be required, the longitudinal joints of shells exceeding ½ in. in thickness may be lap riveted or single-strapped butt-type, provided:

(1) The operating pressure does not exceed 50 psi; and

(2) The original plate thickness is at least 1.8 times that required for strength; and

(3) Telltale holes are drilled as provided in Par. UG-25.

(c) The thickness limitations in (a) do not apply to the portion of a shell which is fully staybolted to an inner plate.

UR-19 Bolted Joints

(a) Permanent joints in plates made by closely fitted bolting, instead of by riveting, shall be computed in the same manner as for riveted joints (see Par. UR-35).

(b) The crushing strength of bolts and plates shall be taken into consideration when designing bolted connections for bolts having high shear strength at elevated temperatures.

UR-20 Transverse Pitch (Back Pitch) of Rows of Rivets

(a) The distance between the center lines of any adjacent rows of rivets in a longitudinal joint, or the back pitch measured at right angles to the direction of the joint, shall have the following minimum values:

(1) If p/d is 4 or less, the minimum value shall be $1\frac{3}{4}\,d$;

(2) If p/d is over 4, the minimum value shall be $1\frac{3}{4}\,d + 0.1\,(p - 4d)$;

where p = pitch of rivets in outer row when a rivet in the inner row comes midway between two rivets in the outer row, inches, or

p = pitch of rivets in the outer row less pitch of rivets in the inner row when two rivets in the inner row come between two rivets in the outer row, inches (it is here assumed that the joints are of the usual construction in which the rivets are symmetrically spaced);

d = nominal diameter of the rivet holes, inches.

(b) The back pitch or rivets in a circumferential joint may be less than that called for in (a), provided the ligaments between rivets in a circumferential direction, and those in a diagonal direction, as determined by the rules in Par. UG-53, have sufficient strength to withstand the maximum combined stress due to the applicable loadings enumerated in Par. UG-22 without exceeding the allowable stress values given in Subsection C.

UR-21 Preparation of Plate Edges

(a) The calking edges of plates, buttstraps, and heads shall be beveled to an angle not sharper than 70 deg to the plane of the plate, and as near thereto as practicable.

(b) Every portion of the unfinished surfaces of the calking edges of plates, buttstraps, and heads shall be planed, milled, chipped or ground to a depth of not less than one-fourth of the thickness of the material, but in no case less than ⅛ in.

UR-22 Edge Distance

On longitudinal joints, the distance from the centers of rivet holes to the edges of the plates, except rivet holes in the ends of buttstraps, shall be not less than 1½ times and not more than 1¾ times the diameter of the rivet holes; this distance to be measured from the center of the rivet holes to the calking edge of the plate before mechanical calking (see Par. UR-40). The corresponding distance for circumferential seams shall be not less than 1¼ times the diameter of the rivet holes.

UR-23 Openings

(a) Openings for nozzles and other connections shall be far enough away from any main riveted joint so that the joint and the opening reinforcement plates do not interfere with one another.

(b) Welded connections which require postweld heat treatment and which are attached to vessels having seams of riveted construction shall be fabricated and postweld heat treated prior to the making up or attachment of the courses by riveting. If they do not require postweld heat treatment and are attached after riveting, the welds shall be located at a distance from the riveted seam at least equal to the outside diameter of the attachment weld plus four times the thickness of the shell plate.

(c) Openings for pipe connections to vessels having riveted joints may be made by inserting pipe couplings or similar devices, not exceeding 3 in. pipe size, in the shell or heads and securing them by welding, without necessitating the application of the restrictive stamping provisions of Par. UG-116, provided the welding is performed by welders or welding operators who have been qualified under the provisions of Section IX of the Code for the welding position and type of joint used.

UR-24 Nozzles

(a) Nozzles may be integral or attached to the vessel by any of the methods provided for in Par. UG-43.

(b) For nozzle fittings having a bolting flange and an integral flange for riveting, the thickness of the flange attached to the pressure vessel shall not be less than the thickness of the neck of the fitting.

UR-25 Reinforcement of Openings

(a) The area of reinforcement shall be calculated by the rules in Pars. UG-36 through UG-43.

(b) The thickness of each independent riveted reinforcing flange or ring shall not be less than given in Table UR-25.

(c) The strength of rivets in tension in a flanged frame or ring riveted to the outside of a vessel shall be at least equal to that required to resist the load due to the maximum allowable working pressure computed as follows:

(1) For outside calking the load shall be equal to the area bounded by the outside calking multiplied by the maximum allowable working pressure;

(2) For inside calking (and with no outside calking) the load shall be equal to the area bounded by the inside calking multiplied by the maximum allowable working pressure.

(d) The rivets attaching nozzles shall be so spaced as to avoid the possibility of the shell plate or the nozzle flange failing by tearing around through the rivet holes. This feature shall be checked by applying the rules given in Par. UG-53.

UR-26 Lugs and Brackets

Shearing and crushing stresses in rivets used for attaching lugs or brackets shall not exceed 40 per cent of the maximum allowable stresses permitted in Pars. UR-11 and UR-12.

FABRICATION

UR-30 General

The rules in the following paragraphs apply specifically to the fabrication of pressure vessels and vessel parts that are fabricated by riveting and shall be used in conjunction with the general requirements for *Fabrication* in Subsection A, and with the specific requirements for *Fabrication* in Subsection C that pertain to the class of material used.

UR-31 Buttstraps

(a) Buttstraps shall be formed to the curvature of the shell with which they are to be used (see Par. UG-79).

(b) When the buttstrap of a longitudinal joint does not extend the full length of a shell section, the abutting edges of the shell plate may be welded provided the length of the weld between the end of the buttstrap and the edge of the head or adjoining shell plate is not greater than 2½ in. When so constructed, the restrictive stamping provisions of Par. UG-116 shall not apply provided the welding is performed by welders who have been qualified under the provisions of Section IX for the welding position and type of joint used.

TABLE UR-25

MINIMUM THICKNESS OF INDEPENDENT RIVETED REINFORCING RINGS OR FLANGES

Thickness of shell plate, in.	Thickness of reinforcing ring or flange, in.
⅛	⅛
3/16	3/16
¼ to 11/32	¼
3/8 to 13/32	5/16
7/16 to 15/32	3/8
½ to 9/16	7/16
5/8 to ¾	½
⅞	5/8
1	11/16
1⅛ to 2	¾
Over 2	1

UR-32 Rivet and Staybolt Holes

(a) All holes for rivets or staybolts in plates, heads and attachments to the vessel wall shall be drilled to size after assembly except as follows:

(1) Rivet holes may be subdrilled before assembly and reamed to size after the parts have been firmly bolted in position with tack bolts. The finished holes shall be true, clean and concentric;

(2) In plates or heads not more than 5/16 in. in thickness, holes for rivets may be subpunched at least ⅛ in. less than finished diameter; and, in plates or heads more than 5/16 in. but not more than ⅝ in. in thickness, holes for rivets may be subpunched at least ¼ in. less than the finished diameter. Rivet holes subpunched before assembly shall be reamed to size after the parts have been firmly bolted in position with tack bolts.

(b) Rivet holes for swell-neck or countersunk rivets as used for corrosive contents shall be countersunk on the inside of the vessel.

UR-33 Tolerance on Rivet Holes

(a) *Hot Driven Rivets* The diameter of the rivet hole when drilled or reamed shall not exceed the diameter of the rivet when cold by more than 1/16 in. For rivets up to 7/16 in. diameter it is preferable to limit the diameter of the hole to 1/32 in. greater than the rivet diameter when cold.

(b) *Cold Driven Rivets* The diameter of the hole when drilled or reamed shall not exceed the diameter of the rivet by more than 1/32 in.

UR-34 Chamfering Rivet Holes

(a) All rivet holes shall be chamfered to remove burrs and chips after drilling or reaming.

(b) In vessels for use at metal temperatures at which the allowable stress value is less than its allowable stress value at 100 F, or for use at working pressures above 150 psi, the edges of rivet holes for rivets 1 in. or over in diameter shall be chamfered approximately 3/32 in. to avoid

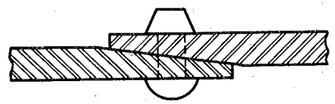

FIG. UR-38 TAPERED CIRCUMFERENTIAL JOINT – TAPERED CIRCUMFERENTIAL JOINT CONNECTION MAY BE USED FOR SEAMLESS AND WELDED RINGS AND FOR HEADS TO SEAMLESS, WELDED, OR RIVETED RINGS

a sharp edge under the head. The edges of rivet holes for rivets under 1 in. in diameter shall be chamfered approximately 1/32 in.

UR-35 Holes for Bolted Joints

Bolt holes for permanent joints or for attaching permanent fixtures shall be carefully reamed to not more than 0.02 in. larger than the bolt as finished, or bolts may be machined to a light-drive fit in reamed holes. Bolt holes may be countersunk to an angle of not less than 30 deg to the axis of the hole when the bolt heads are so formed.

UR-36 Postweld Heat Treatment

Any heat-treatment required for parts of riveted vessels shall be completed before riveting.

UR-37 Assembly of Joints

(a) All parts assembled for riveting shall have contact surfaces free from scale, chips, or other foreign material.

(b) Before riveting, parts shall be securely bolted together at intervals in order to bring surfaces into close contact and to prevent creeping during riveting.

(c) Holes shall be made fair by reaming only; drifting of holes is not permitted.

UR-38 Assembly of Circumferential Joints

(a) The inside circumference of an outside course or head shall not exceed the outside circumference of an inside course or head by more than one-fourth of one per cent (1/400) of the diameter of the shell, the circumferences to be measured before the longitudinal joint is riveted.

(b) Circumferential joints shall preferably be made with a shrink fit, especially for seamless rings. If rings or heads are machined to obtain a proper fit, rounded fillets shall be provided at the inner edge of the cut.

(c) Circumferential joints may be machined to a slight taper to facilitate fitting as shown in Fig. UR-38. Such tapered joints shall be assembled with a light-drive or shrink fit. The combined thickness of the plates at the rivets shall not be less than three-fourths of the sum of the plate thicknesses.

UR-39 Riveting

(a) All mill scale shall be removed from rivets before they are inserted in the holes. All rivets 5/8 in. nominal diameter and larger shall be driven hot. All rivets shall be driven to completely fill the rivet holes and to form a full head as specified in the design without showing any depression from the dies in the plate or fitting. Some acceptable forms of rivet heads are shown in Fig. UR-39. No driven rivet head shall have

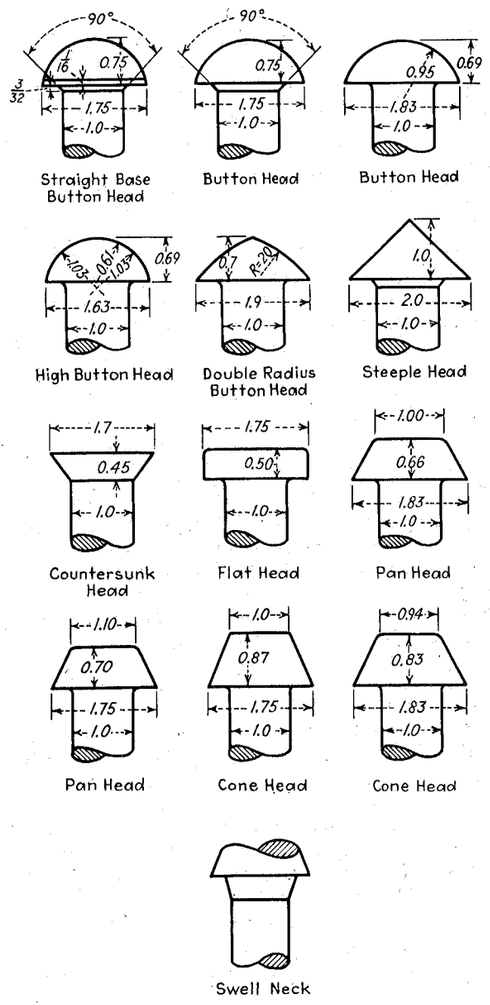

FIG. UR-39 ACCEPTABLE FORMS OF RIVET HEADS AFTER DRIVING

an eccentricity of more than 10 per cent of the nominal diameter of the rivet. All rivets shall preferably be driven with a pressure riveting device. Pressure shall be applied to hot-driven rivets sufficiently long to permit shrinkage in cooling while under pressure. All rivets not driven with a pressure riveting device shall be driven with a pneumatic riveting hammer. Rivets over 7/8 in. in nominal diameter shall preferably be driven with pneumatic riveting hammers used on both ends of the rivet simultaneously.

(b) Rivets which do not meet the requirements

given above shall be removed and replaced by new rivets.

UR-40 Joint Tightness

(a) Joints may be made tight by mechanical calking before or during the preliminary hydrostatic test. The calking shall be done with a tool of such form that there is no danger of scoring or damaging the plate underneath the calking edge, or of splitting the calked plate. No foreign material shall be used between the calked plates for the purpose of making a joint tight.

(b) Welding may be used to seal the calking edges of riveted plate joints, nozzles and their reinforcements, the edges of stiffening rings at the contact surface, and the edges of all rivets and bolt heads, either inside or outside, provided the carbon content of steel plates does not exceed 0.35 per cent. The seal welding shall be done after the vessel has successfully passed a preliminary hydrostatic test at the pressure required for the final hydrostatic test.

(c) Seal welding shall be applied either in a single or a double layer so as to have a throat dimension not less than 3/16 in. nor more than 5/16 in.

INSPECTION AND TESTS

UR-50 General

The rules in the following paragraphs apply specifically to the inspection and testing of pressure vessels and vessel parts that are fabricated by riveting and shall be used in conjunction with the general requirements for *Inspection and Tests* in Subsection A, and with the specific requirements for *Inspection and Tests* in Subsection C that pertain to the class of material used.

UR-51 Inspection During Fabrication

The inspector shall assure himself that the rivet holes are properly reamed and that each vessel is subjected to the prescribed hydrostatic or pneumatic test and is tight under such test.

UR-52 Curvature and Fit of Plates and Buttstraps

The inspector shall see that buttstraps and the ends of shell plates forming the longitudinal joints are formed to the proper curvature and that the buttstraps are properly fitted, particularly at the girth joint intersections.

UR-53 Inspection of Rivets and Bolts

Before rivets and bolts are used, the inspector shall satisfy himself that they are free from injurious defects and that rivets are of sufficient length to completely fill the rivet holes and give a full rivet head.

UR-54 Rivet Holes

The inspector shall see that all rivet holes are in accordance with this Division, that all holes after reaming are fair, and that all burrs and chips are removed. When drilling the holes is required, the inspector shall satisfy himself that they have been drilled. Before holes are reamed, the inspector shall see that burrs are removed between the plates, that the plates are laid up tightly together, and are held by sufficient bolts before riveting is started. If swell-neck or countersunk rivets are to be used, the inspector shall see that the rivet holes are properly countersunk.

UR-55 Rivets

(a) The inspector shall test the tightness with which the rivets fill the holes by tapping the heads with a rivet-testing hammer while holding a finger against one side of the rivet head next to the plate.

(b) Loose, cracked, and burned rivets shall be replaced.

STAMPING AND REPORTS

UR-60 General

The provisions for stamping and reports given in Pars. UG-115 through UG-120 shall apply without supplement to riveted pressure vessels.

PRESSURE-RELIEF DEVICES

UR-65 General

The provisions for pressure-relief devices given in Pars. UG-125 through UG-134 shall apply without supplement to riveted pressure vessels.

Part UF
Requirements for Pressure Vessels Fabricated by Forging

GENERAL

UF-1 Scope

The rules in Part UF are applicable to forged pressure vessels without longitudinal joints, including their component parts that are fabricated of carbon and low-alloy steels or of high-alloy steels within the limitations of Part UHA. These rules shall be used in conjunction with the applicable requirements in Subsection A, and with the specific requirements in Subsection C that pertain to the respective classes of all materials used.

MATERIALS

UF-5 General

(a) Materials used in the construction of forged pressure vessels shall comply with the requirements for materials given in Pars. UG-5 through UG-14, except as specifically limited or extended in (b) and (c), and in Par. UF-6.

(b) The ladle analysis of forgings to be fabricated by welding shall not exceed carbon 0.35 percent. When the welding, however, involves only minor non-pressure attachments as limited in Par. UF-32, seal welding of threaded connections, as permitted in Par. UF-43, or repairs as limited by Par. UF-37, the carbon content shall not exceed 0.50 percent by ladle analysis. When by ladle analysis the carbon analysis exceeds 0.50 percent no welding is permitted.

(c) Materials, other than austenitic steels, subjected to liquid quench and temper heat treatment shall be fabricated without welding or brazing except as otherwise provided in this Division.

UF-6 Forgings

Vessels, main sections of vessels and other pressure parts shall conform to one of the following:

(1) Forging specifications SA-105, SA-181, SA-182, SA-266, SA-336, SA-350 or SA-372.

(2) One of the specifications listed in Table UCS-23 or Table UHA-23 for plates, seamless pipe or seamless tube when such material is further processed by a forging operation.

DESIGN

UF-12 General

The rules in the following paragraphs apply specifically to vessels or main sections of vessels that are forged from ingots, slabs, billets, plate, pipe or tubes, and shall be used to supplement the requirements for design which are applicable, as given in Pars. UG-16 through UG-55, and those given in Pars. UCS-16 through UCS-67 and UHA-20 through UHA-34. Sections of vessels may be joined by any method permitted in the several parts of this Division except as limited in UF-5(b) and UF-5(c).

Vessels constructed of SA-372 Classes III, IV or V materials must be of streamlined design, and stress raisers such as abrupt changes in section shall be minimized. Openings in vessels constructed of liquid quenched and tempered materials, other than austenitic steel, shall be reinforced in accordance with Par. UG-37; Par. UG-36(c)(3) shall not apply.

UF-13 Head Design

(a) The minimum required thickness of forged heads shall be computed using the formulas of Par. UG-32. When heads are made separate from the body forging they may be attached by any method permitted in the several parts of this Division except as limited in UF-5(b) and UF-5(c).

(b) The juncture of a forged conical head with the body shall be a knuckle, the inside radius of which shall be not less than 6 per cent of the internal diameter of the vessel. The thickness at the knuckle shall be not less than that of the cylinder and shall be faired into that of the head at the base of the cone.

(c) Except for the $3t$ requirements in Par. UG-32(j) the design of the head shall comply with the applicable provisions of Pars. UG-32, UG-33, UG-34 and UA-6.

UF-25 Corrosion Allowance

(a) Provision shall be made for corrosion in accordance with the requirements in Par. UG-25.

FABRICATION

UF-26 General

The rules in the following paragraphs apply specifically to forged vessels, main sections of vessels and other vessel parts, and shall be used to supplement the applicable requirements for fabrication given in Pars. UG-75 through UG-84 and UCS-79. For high-alloy steel forged vessels, the applicable paragraphs of Part UHA shall also apply.

UF-27 Tolerances on Body Forgings

(a) The inner surface of the body shall be true to round to the degree that the maximum difference between any two diameters at 90 deg to each other, determined for any critical cross-section, does not exceed 1 per cent of the mean diameter at that section. Chip marks and minor depressions in the inner surface may be filled by welding to meet these tolerances when the welding is done as permitted in Par. UF-32.

(b) If out-of-roundness exceeds the limit in (a) and the condition cannot be corrected, the forging shall be rejected except that if the out-of-roundness does not exceed 3 per cent, the forging may be certified for a lower pressure in the formula:

$$\text{Reduced pressure } P' = P\left[\frac{1.25}{\frac{S_b}{S}+1}\right]$$

and in which $S_b = \dfrac{1.5\,P\,R_1 t\,(D_1 - D_2)}{t^3 + 3\dfrac{P}{E}R_1 R_a^2}$

P = maximum allowable working pressure for forging meeting the requirements of (a), pounds per square inch;

t = the average (mean) thickness, inches;

D_1 and D_2 = respectively the inside diameters, maximum and minimum, as measured for the critical section, and for one additional section in each direction therefrom at a distance not exceeding $0.2\,D_2$. The average of the three readings for D_1 and D_2 respectively shall be inserted in the formula;

S_b = bending stress, pounds per square inch at metal service temperature;

E = modulus of elasticity. For ferritic steels = 29×10^6; for austenitic steels = 28×10^6; to be corrected for metal service temperature (see Fig. UF-27);

S = design stress value, pounds per square inch, at metal service temperature;

$R_1 = \frac{1}{4}(D_1 + D_2)$ = average inside radius at critical section, inches;

$R_a = \frac{1}{4}(D_1 + D_2) + t/2$ = average radius to middle of shell-wall at critical section, inches.

NOTE 1: Use $P' = P$ when S_b is less than $0.25S$.

NOTE 2: In all measurements, correct for corrosion allowance if specified.

UF-28 Methods of Forming Forged Heads

Forged heads shall be made either by closing in extensions of the body of such shape and dimensions as may be required to produce the final form desired, or by separate forgings (see Par. UF-13(a)).

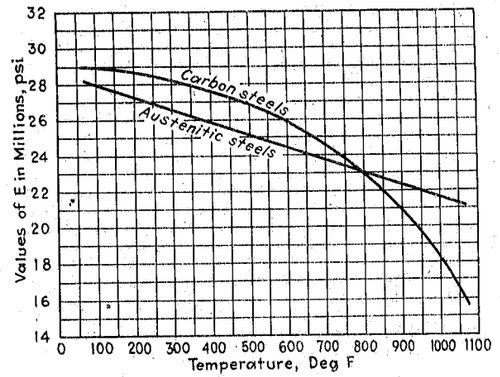

FIG. UF-27 MODULUS OF ELASTICITY – DESIGN VALUES

UF-29 Tolerance on Forged Heads

Forged heads shall be as true as it is practicable to make them to the shape shown on the design drawings. Any deviations therefrom shall merge smoothly into the general shape of the head and shall not evidence a decrease of strength for the sections as required by the formulas for design.

UF-30 Localized Thin Areas

Forgings are permitted to have small areas thinner than required if the adjacent areas surrounding each has sufficient thickness to provide the necessary reinforcement according to the rules for reinforcement in Par. UG-40.

UF-31 Heat Treatment

(a) *Normalized or Annealed Material*

(1) After all forging is completed, each vessel or forged part fabricated without welding shall be heat treated in accordance with the applicable material specification. When defects are repaired by welding, subsequent heat treat-

ment may be necessary in accordance with Par. UF-37 (b).

(2) Vessels fabricated by welding of forged parts requiring heat treatment shall be heat treated in accordance with the applicable material specification as follows:

(a) After all welding is completed, or

(b) Prior to welding, followed by postweld heat treatment of the finished weld in accordance with Par. UW-40.

(c) When the welding involves only minor non-pressure attachments to vessels having carbon content exceeding 0.35 per cent but not exceeding 0.50 per cent by ladle analysis, requirements of Par. UF-32 (b) shall govern.

(b) *Liquid Quenched Material*

(1) Vessels fabricated by forging material to be liquid-quenched and tempered shall be subjected to this heat treatment in accordance with the applicable material specifications after the completion of all forging, welding of non-pressure attachments as permitted by Par. UF-32 and repair welding as limited by Par. UF-37. Seal welding of threaded connections as permitted in Par. UF-43 may be performed either before or after this heat treatment. (Quenching medium must be oil for vessels fabricated from SA-372 material)

(a) After final heat-treatment, such vessels shall be examined for the presence of cracks on the outside surface of the shell portion and on the inside surface where practicable. This examination shall be made by liquid penetrant when the material is non-magnetic and by liquid penetrant or magnetic particle examination when the material is ferro-magnetic.

(b) After final heat treatment, liquid quenched and tempered vessels, except those made of austenitic steels, shall be subjected to Brinell hardness tests at 5 ft. intervals with a minimum of four readings at each of not less than three different sections representing approximately the center and each end of the heat treated shell. The average of the individual Brinell hardness numbers at each section shall be not less than 10 per cent below nor more than 25 per cent above the number obtained by dividing 500 into the specified minimum tensile strength of the material, and the highest average hardness number shall not exceed the lowest average value on an individual vessel by more than 40.

NOTE: (Other hardness testing methods may be used and converted to Brinell numbers by means of the Table in ASTM E-140-58.)

Reheat treatment is permitted.

(c) In the case of austenitic steels, the heat treatment procedures followed shall be in accordance with Par. UHA-32.

(c) *Non-heat Treated Material* Postweld heat treatment of vessels fabricated by welding of forged parts not requiring heat treatment shall meet with the requirements of Par. UCS-56.

UF-32 Welding for Fabrication

(a) Vessels which are constructed of material other than austenitic steel and which have been liquid quenched and tempered shall be fabricated without welding or brazing, except as otherwise provided in this Division.

(b) All welding used in connection with the fabrication of forged vessels or components shall comply with the applicable requirements of Parts UW, UCS and UHA, and Par. UF-5 (b) except as modified in UF-32 (c). Procedure qualification in accordance with Section IX shall be performed with the heat treatment condition of the base metal and weld metal as in Par. UF-31 as contemplated for the actual work.

(c) When the carbon content of the material exceeds 0.35 per cent by ladle analysis, the vessel or part shall be fabricated without welding of any kind, except for repairs (see Par. UF-37 (b)), for seal welding of threaded connections as permitted in Par. UF-43, and for minor non-pressure attachments. Minor non-pressure attachments shall be joined by fillet welds of not over ¼ in. throat dimensions. Such welding shall be allowed under the following conditions:

(1) The suitability of the electrode and procedure shall be established by making a groove weld specimen as shown in Fig. Q-3 of Section IX in material of the same analysis and of thickness in conformance with Table Q-13. The specimen before welding shall be in the same condition of heat treatment as the work it represents and after welding the specimen shall be subjected to heat treatment equivalent to that contemplated for the work. Tensile and bend tests, as shown in Figs. Q-6 and Q-7 (Figs. Q-7.1 and Q-7.2 respectively), shall be made. These tests shall meet the requirements of Pars. Q-6 and Q-8 of section IX. The radius of the mandrel used in the guided bend test shall be as follows:

Specimen Thickness	Radius of Mandrel *(B)**	Radius of Die *(D)**
⅜ in.	1½ in.	1 11/16 in.
t	3⅓ t	4⅓ t + 1/16 in.

*Corresponds to dimensions B and D in Fig. Q-8 in Section IX, and other dimensions to be in proportion.

Any cutting and gouging processes used in the repair work shall be included as part of the procedure qualification.

(2) Welders shall be qualified for fillet welding specified by making and testing a specimen in accordance with Fig. Q-9 (a) and Par. Q-9 of Section IX. Welders shall be qualified for repair welding by making a test plate in accordance with Fig. Q-3 from which the bend tests outlined in Table Q-24 shall be made. The electrode used in making these tests shall be of the same classification number as that specified in the procedure. The material for these tests can be carbon steel plate or pipe provided the test specimens are preheated, welded and post-heated in accordance with the procedure specification for the type of electrode involved.

(3) The finished weld shall be postweld heat treated or given a further heat treatment as required by the applicable specification.

(4) The finished welds shall be examined after postweld heat treatment by liquid penetrant when the material is non-magnetic and by liquid penetrant or magnetic particle examination using the Prod Method when the material is ferro-magnetic.

UF-37 Repair of Defects in Material

(a) Surface imperfections such as chip marks, blemishes or other irregularities shall be removed by grinding or machining and the surface exposed shall be blended smoothly into the adjacent area where sufficient wall thickness permits thin areas in compliance with the requirements of Par. UF-30.

(b) Thinning to remove defects beyond those permitted in Par. UF-30 may be repaired by welding, only after approval by the inspector. Defects shall be removed to sound metal as shown by acid etch or any other suitable method of examination. The welding shall be as outlined below:

(1) Material having carbon content of 0.35 per cent or less (by ladle analysis).

(a) The welding procedure and welders shall be qualified in accordance with Section IX.

(b) Postweld heat treatment after welding shall be governed as follows:

(1) All welding shall be postweld heat treated if Par. UCS-56 requires postweld heat treatment, for all thicknesses of material of the analysis being used.

(2) Fillet welds need not be postweld heat treated unless required by (1) or unless the fillet welds exceed the limits given in Par. UCS-56.

(3) Repair welding shall be postweld heat treated when required by (1) or if it exceeds six square in. at any spot or if the maximum depth exceeds ¼ in.

(c) Repair welding shall be radiographed if the maximum depth exceeds ⅜ in. Repair welds ⅜ in. and under in depth which exceed six square in. at any spot and those made in materials requiring postweld heat treatment shall be examined by radiographing, magnetic particle or liquid penetrant examination or any alternative method suitable for determining cracks.

(d) For liquid quenched and tempered steels, other than austenitic steels, welding repairs shall be in accordance with UF-37 (b) (2) (b).

(2) Material having carbon content over 0.35 per cent (by ladle analysis).

(a) Welding repairs shall conform with Par. UF-32 (c) except that if the maximum weld depth exceeds ¼ in., radiography, in addition to magnetic particle or liquid penetrant examination, shall be used.

(b) Welding repairs of materials which are to be or have been liquid quenched and tempered, regardless of depth or area of repairs shall have the repaired area radiographed and examined by magnetic particle or liquid penetrant examination.

UF-38 Repair of Weld Defects

The repair of welds of forging having carbon content not exceeding 0.35 per cent by ladle analysis shall follow the requirements of Par. UW-38.

UF-43 Attachment of Threaded Nozzles to Integrally Forged Necks and Thickened Heads on Vessels

Threaded openings, over 3-in. pipe size, but not exceeding the smaller of one-half of the vessel diameter or 8-in. pipe size, may be used in the heads of vessels having integrally forged heads and necks that are so shaped and thickened as to provide a center opening, which shall meet the rules governing openings and reinforcements contained elsewhere in the code. Length of thread shall be calculated for the opening design, but shall not be less than shown in Table UG-43. Threaded connections employing straight threads shall provide for mechanical seating of the assembly by a shoulder or similar means. When seal welding is employed in the installation of a threaded nozzle, the work shall be performed and inspected in the shop of the vessel manufacturer. Seal welding shall comply with Par. UF-32.

INSPECTION AND TESTS

UF-45 General

The rules in the following paragraphs apply specifically to the inspection and testing of

forged vessels and their component parts. These rules shall be used to supplement the applicable requirements for inspection and tests given in Pars. UG-90 through UG-102. All forged vessels shall be examined as manufacture proceeds, to assure freedom from loose scale, gouges or grooves, and cracks or seams that are visible. After fabrication has passed the machining stage, the vessel body shall be measured at suitable intervals along its length to get a record of variations in wall thickness, and the nozzles for connecting piping and other important details shall be checked for conformity to the design dimensions.

UF-46 Approval by Inspector

Surfaces which are not to be machined shall be carefully examined for visible defects such as seams, laps, or folds. On surfaces to be machined the inspection shall be made after machining. Regions from which defective material has been removed shall be inspected after removal and again after any necessary repair.

UF-47 Parts-Forging

(a) When welding is used in the fabrication of parts-forgings completed elsewhere, the parts-forging manufacturer shall furnish a partial data report Form U-2.

(b) All parts-forgings completed elsewhere shall be marked with the manufacturer's name and the forging identification, including material designation. Should identifying marks be obliterated in the fabrication process and for small parts, other means of identification shall be used. The forging manufacturer shall furnish reports of chemical and mechanical properties of the material and certification that each forging conforms to all requirements of Part UF.

(c) Welded repairs to parts-forgings completed elsewhere need not be inspected by an authorized inspector at the plant of the forging manufacturer, but the manufacturer shall furnish a report of the extent and location of such repairs together with certification that they were made in accordance with all other requirements of Pars. UF-37 and UF-38. If desired, welding repairs of forgings made elsewhere may be made, inspected, and tested at the shop of the pressure vessel manufacturer.

UF-52 Check of Heat-Treatment and Postweld Heat Treatment

The inspector shall check the provisions made for heat-treatment to assure himself that the heat-treatment is carried out in accordance with provisions of Pars. UF-31 and UF-32. He shall also assure himself that postweld heat treatment is done after repair welding when required under the rules of Par. UF-37.

UF-53 Test Specimens

When test specimens are to be taken under the applicable specification, the inspector shall be allowed to witness the selection, place the identifying stamping on them, and witness the testing of these specimens.

UF-54 Tests and Retests

Tests and retests shall be made in accordance with the requirements of the material specification.

STAMPING AND REPORTS

UF-115 General

The rules of Pars. UG-115 through UG-120 shall apply to forged vessels as far as practicable. Vessels constructed of liquid quenched and tempered material, other than austenitic steels, shall be stamped on the thickened head, unless a nameplate is used.

All data reports shall show the heat number or numbers and ladle analysis of the metal in the ingot from which the vessel was forged, the test results obtained for the forging, and the dimensions of the forged vessel.

PRESSURE-RELIEF DEVICES

UF-125 General

The provisions for pressure-relief devices of Pars. UG-125 through UG-134 shall apply without supplement.

Part UB

Requirements for Pressure Vessels Fabricated by Brazing

GENERAL

UB-1 Scope

(a) The rules in Part UB are applicable to pressure vessels and parts thereof that are fabricated by brazing and shall be used in conjunction with the general requirements in Subsection A, and with the specific requirements in Subsection C that pertain to the class of material used.

(b) *Definition* The term brazing as used in Part UB is defined as a metal joining process wherein coalescence is produced by heating to suitable temperatures above 800 F and by using a nonferrous filler metal, having a melting point below that of the base metals. The filler metal is distributed between the closely fitted surfaces of the joint by capillary attraction.

(c) Specific brazing processes which are permitted for use under this Division are classified by method of heating as follows:

Torch brazing
Furnace brazing
Induction brazing
Electrical resistance brazing
Dip brazing – salt and flux bath

UB-2 Elevated Temperature

Operating temperature is dependent on the brazing filler metal as well as on the base metals being joined. The maximum allowable operating temperatures for the brazing filler metals are shown in Table UB-2.

MATERIALS

UB-5 General

(a) Materials used in the construction of pressure vessels and parts thereof by brazing shall conform to the specifications in Section II of the Code, and shall be limited to those materials for which allowable stress values have been assigned in Subsection C. The materials being brazed shall be of proved brazing quality with the brazing filler metal employed. Satisfactory qualification of the brazing procedure under Section IX of the Code is considered proof of acceptable material for brazed construction for operating temperatures not exceeding 200 F. For operating temperatures above 200 F to the limits shown in Table UB-2, the requirements in Par. UB-12 shall also be met.

(b) Combinations of dissimilar metals may be joined by brazing provided they meet the qualification requirements of Section IX, and the additional requirements of Par. UB-12 when applicable.

UB-6 Brazing Filler Metals

Brazing filler metals used in the construction of pressure vessels and parts thereof by brazing shall conform to Specification SB-260. The selection of the brazing filler metal for a specific application shall depend upon its suitability for the base metals being joined. Satisfactory qualification of the brazing procedure under Section IX of the Code is considered proof of the suitability of the filler metal for operating temperatures not exceeding 200 F. For operating temperatures above 200 F to the limits of Table UB-2, Par. UB-12 shall also be met.

UB-7 Fluxes and Atmospheres

Suitable fluxes or atmospheres or combinations of fluxes and atmospheres shall be used to prevent oxidation of the brazing filler metal and the surfaces to be joined. Satisfactory qualification of the brazing procedure under Section IX of the Code is considered proof of the suitability of the flux and/or atmosphere.

DESIGN

UB-9 General

The rules in the following paragraphs apply specifically to pressure vessels and parts thereof that are fabricated by brazing and shall be used in conjunction with the general requirements for *Design* in Subsection A, and the specific requirements for *Design* in Subsection C that pertain to the class of material used.

UB-10 Strength of Brazed Joints

It is the responsibility of the designer to determine from suitable tests or from past experience that the specific brazing filler metal selected can produce a joint which will have adequate strength

over the operating temperature range. The strength of the brazed joint shall not be less than the strength of the base metal, or the weaker of two base metals in the case of dissimilar metal joints, for all temperatures within the operating range.

UB-11 Room Temperature

Satisfactory qualification of the brazing procedure in accordance with Section IX, Part C of the Code is considered satisfactory proof of the adequacy of the base materials, the brazing filler metal, the flux and/or atmosphere, and other variables of the procedure for service not exceeding 200 F.

UB-12 Temperatures Above 200 F

For service temperatures above 200 F to the limits shown in Column 1 of the Table UB-2, procedure qualification tests in addition to those required in Par. UB-10 and UB-11 and Section IX are required and shall be considered a part of the qualification procedure. For such service temperatures, the following tests are required at no more than 100 F increments to and including the design temperature:

(1) A tensile test of the joint, the resulting tensile strength and yield strength of which shall not be less than the minimum tensile strength or yield strength of the weaker of the base materials at the test temperature.

(2) If the design stress of one of the base materials is based on creep or rupture properties at the design temperature, creep or rupture tests shall be performed to determine that the creep or rupture strength of the joint is no less than that of the weaker of the two base metals. (See Appendices P and Q.)

The substantiating test data shall be recorded and the record of any tests shall be made available to the authorized inspector.

UB-13 Corrosion

(a) Provision shall be made for corrosion in accordance with the requirements in Par. UG-25.

(b) Corrosion of the brazing filler metal and galvanic action between the brazing filler metal and the base metals shall be considered in selecting the brazing filler metal.

(c) The plate thickness in excess of that computed for a seamless vessel taking into account the applicable loadings in Par. UG-22 may be taken as allowance for corrosion in vessels that have longitudinal joints of double-strap butt-joint construction. Additional corrosion allowance shall be provided when needed, particularly on the inner buttstraps.

(d) The rules in this Part are not intended to apply to brazing used for the attachment of linings of corrosion-resistant material that are not counted on to carry load.

UB-14 Joint Efficiency Factors

(a) The joint efficiency factor to be used in the design of pressure vessels and parts thereof shall be 1.0 for joints in which visual examination assures that the brazing filler metal has penetrated the entire joint (See Fig. UB-14(a)).

(b) The joint efficiency factor to be used in the design of pressure vessels and parts thereof shall be 0.5 for joints in which visual examination will not provide proof that the brazing filler metal has penetrated the entire joint. (See Fig. UB-14 (b), Par. UB-15 (b) and (c)).

UB-15 Application of Brazing Filler Metal

(a) The design shall provide for the application of the brazing filler metal as part of the design of the joint. Where practicable, the brazing filler metal shall be applied in such a manner that it

TABLE UB-2
MAXIMUM OPERATING TEMPERATURES FOR BRAZING FILLER METAL

SB-260 Filler Metal Classification	Column 1 Maximum Allowable Operating Temperature °F based on Complete Design Data [1]	Column 2 Maximum Allowable Operating Temperature °F based on Brazing Qualification [2]
B Cu P (Group)	300	200
B Ag (Group)	400	200
B Cu Zn (Group)	400	200
B Cu	400	200
B AlSi	400	200

[1] See Pars. UB-5 and UB-12.
[2] See Pars. UB-5 and UB-11.

TABLE UB-17
RECOMMENDED JOINT CLEARANCES AT BRAZING TEMPERATURE

Brazing Filler Metal	Clearance, in.
B Al Si Group	0.006–0.010 for laps less than ¼ in. 0.010–0.025 for laps greater than ¼ in.
B Cu P Group	0.001–0.005
B Ag Group	0.002–0.005
B Cu Zn Group	0.002–0.005
B Cu Group	0.000–0.002

will flow into the joint or be distributed across the joint and produce visible evidence that it has penetrated the joint.

(b) *Manual Application.* The manual application of the brazing filler metal by face feeding to a joint should be from one side only. Visual observation of the other side of the joint will then show if the required penetration of the joint by the filler metal has been obtained. If the side opposite to the filler metal application cannot be visually examined, as is the case with socket-type joints in pipe and tubing (blind joint), a joint efficiency factor of 0.5 shall be used in design of this joint as provided in Par. UB-14 (b).

(c) *Preplaced Brazing Filler Metal* The brazing filler metal may be preplaced in the form of slugs, powder, rings, strip, cladding, spraying or other means. After brazing, the brazing filler metal should be visible on both sides of the joint. If the brazing filler metal is preplaced within a blind joint in such a manner that it penetrates the major portion of the joint during brazing and appears at the visible side of the joint, a joint efficiency factor of 1.0 may be used in the design of the joint. If the brazing filler metal is preplaced on the outside or near the outside of a blind joint, and the other side cannot be inspected to ascertain complete penetration, then a joint efficiency factor of 0.5 shall be used in the design of the joint as provided in Par. UB-14 (b). Fig. UB-14 illlustrates a few examples of this rule.

UB-16 Permissible Types of Joints

(a) Some permissible types of brazed joints are shown in Fig. UB-16. For any type of joint, the strength of the brazed section shall exceed that of the base metal portion of the test specimen in the qualification tension tests provided for in Par. QB-5 of Section IX of the Code. Lap joints shall have a sufficient overlap to provide a higher strength in the brazed joint than in the base metal.

(b) The nominal thickness of base material used with lap joints tested using the test fixture shown in Fig. QB-8 (a) shall not exceed ½ in. There is no thickness limitation when specimens are tested without the test fixture shown in Fig. QB-8 (a).

UB-17 Joint Clearance

The joint clearance shall be kept sufficiently small so that the filler metal will be distributed by capillary attraction. Since the strength of a brazed joint tends to decrease as the joint clearance used is increased, the clearances for the assembly of joints in pressure vessels or parts thereof shall be within the tolerances set up by the joint design and as used for the corresponding qualification specimens made in accordance with Section IX and UB-12 where applicable.

NOTE: For guidance, see Table UB-17 which gives recommended joint clearances at brazing temperature for various types of brazing filler metal. Brazing alloys will exhibit maximum unit strength if clearances are maintained within these limits.

UB-18 Joint Brazing Procedure

A joint brazing procedure shall be developed for each different type of joint of a brazed assembly. A recommended form for recording the brazing procedure is shown in Appendix II of Section IX of the Code. If more than one joint occurs in a brazed assembly, the brazing sequence shall be specified on the drawing or in instructions accompanying the drawing. If welding and brazing are to be done on the same assembly, the welding shall precede the brazing unless it is determined that the heat of welding will not adversely affect the braze previously made.

UB-19 Openings

(a) Openings for nozzles and other connections shall be far enough away from any main brazed joint so that the joint and the opening reinforcement plates do not interfere with one another.

(b) Openings for pipe connections in vessels having brazed joints may be made by inserting pipe couplings, not exceeding three inch pipe size, or similar devices in the shell or heads and securing them by welding, without necessitating the application of the restrictive stamping provisions of Par. UG-116, provided the welding is performed by welders who have been qualified

under the provisions of Section IX of the Code for the welding position and type of joint used. Such attachments shall conform to the rules for welded connections in Pars. UW-15 and UW-16.

UB-20 Nozzles

(a) Nozzles may be integral or attached to the vessel by any of the methods provided for in Par. UG-43.

(b) For nozzle fittings having a bolting flange and an integral flange for brazing, the thickness of the flange attached to the pressure vessel shall not be less than the thickness of the neck of the fitting.

UB-21 Brazed Connections

Connections, such as saddle-type fittings and fittings inserted into openings formed by outward flanging of the vessel wall, in sizes not exceeding three inch pipe size, may be attached to unfired pressure vessels by lap joints of brazed construction. Sufficient brazing shall be provided on either side of the line through the center of the opening parallel to the longitudinal axis of the shell to develop the strength of the reinforcement as prescribed in Par. UG-41 through shear in the brazing.

UB-22 Low Temperature Operation

Impact tests shall be made of the brazed joints in pressure vessels and parts thereof fabricated from materials for which impact tests are required in Subsection C. The tests shall be made in accordance with Par. UG-84 except that terms referring to welding shall be interpreted as referring to brazing.

FABRICATION

UB-30 General

(a) The rules in the following paragraphs apply specifically to the fabrication of pressure vessels and parts thereof that are fabricated by brazing and shall be used in conjunction with the general requirements for *Fabrication* in Subsection A, and with the specific requirements for *Fabrication* in Subsection C that pertain to the class of material used.

(b) Each manufacturer or contractor shall be responsible for the quality of the brazing done by his organization and shall conduct tests not only of the brazing procedure to determine its suitability to insure brazes which will meet the required tests, but also of the brazers and brazing operators to determine their ability to apply the procedure properly.

(c) No production work shall be undertaken until both the brazing procedure and the brazers or brazing operators have been qualified.

UB-31 Qualification of Procedure

(a) Each brazing Procedure as required in Par. UB-18 shall be qualified in accordance with Section IX of the Code. Only qualified procedure specifications shall be followed in construction.

(b) Each manufacturer shall conduct the required tests to qualify all brazing procedures to be used by his organization.

UB-32 Qualification of Brazers and Brazing Operators

(a) All brazers assigned to manual brazing shall have passed the tests prescribed for brazers in Section IX of the Code. All brazing operators assigned to brazing by automatic means or by furnace, induction, resistance, or dip brazing shall pass the tests as prescribed in Section IX of the Code. Such tests shall be conducted by the manufacturer or contractor.

(b) Each brazer and brazing operator, so qualified, shall be assigned an identifying number, letter, or symbol by the manufacturer which shall be used to identify the work of that brazer or brazing operator.

(c) The manufacturer shall maintain a record of the brazers and brazing operators employed by him showing the date and results of tests and the identifying mark assigned to each. These records shall be certified to by the manufacturer and shall be accessible to the inspector.

(d) The tests conducted by one manufacturer shall not qualify the brazer or brazing operator to do work for any other manufacturer.

UB-33 Buttstraps

(a) Buttstraps shall be formed to the curvature of the shell with which they are to be used.

(b) When the buttstraps of a longitudinal joint do not extend the full length of a shell section, the abutting edges of the shell plate may be welded provided the length of the weld between the end of the buttstraps and the edge of the head or adjoining shell plate is not greater than four times the shell plate thickness. When so constructed, the restrictive stamping provisions of Par. UG-116 shall not apply provided the welding is performed by welders who have been qualified under the provisions of Section IX for the welding position and type of joint used. The welds shall be completed before brazing is begun.

UB-34 Cleaning of Surfaces to Be Brazed

The surfaces to be brazed shall be clean and free from grease, paint, oxides, scale and foreign matter of any kind. Any chemical or mechanical

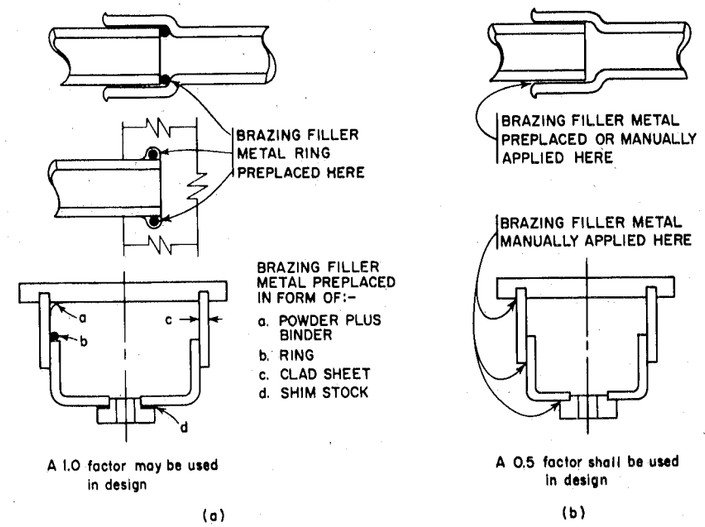

FIG. UB-14 EXAMPLES OF FILLER METAL APPLICATION

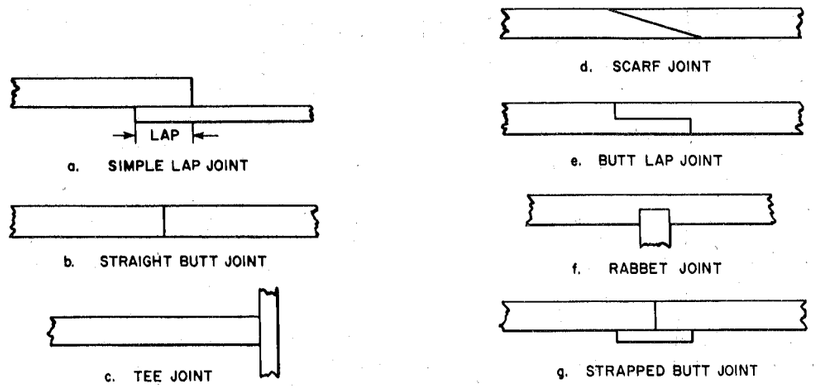

FIG. UB-16 SOME ACCEPTABLE TYPES OF BRAZE JOINTS (OTHER EQUIVALENT GEOMETRIES YIELDING SUBSTANTIALLY EQUAL RESULTS ALSO ARE ACCEPTABLE)

cleaning method may be used that will provide a surface suitable for brazing.

UB-35 Clearance Between Surfaces to Be Brazed

The clearances between surfaces to be brazed shall be maintained within the tolerances provided for by the joint design and used in the qualifying procedure. If greater tolerances are to be used in production, the joint must be requalified for those greater tolerances. The control of tolerances required may be obtained by using rivets, spot welding, crimping, or other means which will not interfere with the quality of the braze. If such means are employed in production, they must also be employed in qualification of procedure, brazer, and operator.

UB-36 Post Brazing Operations

Brazed joints shall be thoroughly cleaned of flux residue by any suitable means after brazing and prior to inspection.[1] Other post brazing operations such as thermal treatments shall be performed in accordance with the qualified procedure.

UB-37 Repair of Defective Brazing

Brazed joints which have been found to be defective may be rebrazed, where feasible, after thorough cleaning, and by employing the same brazing procedure used for the original braze. See Par. UB-44. If a different brazing procedure is employed, i.e., torch repair of furnace brazed parts, a repair brazing procedure shall be established and qualified.

When a repair brazing procedure is established it shall provide control of the application of brazing filler metal to meet the conditions set forth in Par. UB-14(a). Where these requirements cannot be met, the limitations of Par. UB-14(b) will apply.

INSPECTION AND TESTS

UB-40 General

The rules in the following paragraphs apply specifically to the inspection and testing of pressure vessels and parts thereof that are fabricated by brazing and shall be used in conjunction with the general requirements for *Inspection and Tests* in Subsection A and with the specific requirements for *Inspection and Tests* in Subsection C that pertain to the class of material used.

UB-41 Design

The inspector shall examine the design test data for all joints that are to operate above 200 F in service and satisfy himself that adequate design data are available to meet the requirements of Par. UB-12.

UB-42 Procedure

The inspector shall examine the procedure for each type of joint being produced and shall determine that the procedure has been qualified in accordance with the requirements of Section IX and shall satisfy himself that each joint has been fabricated in accordance with the procedure. Where there is evidence of consistent poor quality, the inspector shall have the right at any time to call for and witness tests for the brazing procedure.

UB-43 Brazer and Brazing Operator

(a) The manufacturer shall certify that the brazing on a vessel or part thereof has been done by brazers or brazing operators who are qualified under the requirements of Section IX and the inspector shall assure himself that only qualified brazers or brazing operators have been used.

(b) The manufacturer shall make available to the inspector a certified copy of the record of the qualification tests of each brazer and brazing operator. The inspector shall have the right at any time to call for and witness tests of the ability of a brazer or brazing operator.

UB-44 Visual Examination

(a) Where possible, the inspector shall visually inspect both sides of each brazed joint after flux residue removal. Where it is not possible to inspect one side of a brazed joint (blind joint), the inspector shall check the design to determine that the proper joint factor has been employed, unless he can assure himself that the brazing filler metal has been preplaced in such a manner that it satisfies Par. UB-15(b) and (c).

(b) There shall be evidence that the brazing filler metal has penetrated the joint. In a butt braze there shall be no concavity. The braze may be repaired or rebrazed.

(c) The presence of a crack in the brazing filler metal shall be cause for rejection. Dye penetrant inspection may be used if desired. The braze may be repaired or rebrazed. See Par. UB-37.

(d) The presence of a crack in the base metal adjacent to a braze shall be cause for rejection even if the crack is filled with brazing alloy. Such cracking shall not be repaired.

(e) Visible pinholes or open defects in the braze shall be cause for rejection. The joint may be rebrazed.

(f) Rough fillets, particularly those with a convex appearance, are cause for rejection. Such joints may be repaired or rebrazed.

[1] Flux residues can be extremely corrosive as well as interfering with visual inspection.

STAMPING AND REPORTS

UB-50 General

The provisions for stamping and reports given in Pars. UG-115 through UG-120 shall apply without supplement to brazed pressure vessels and parts thereof.

PRESSURE RELIEF DEVICES

UB-55 General

The provisions for pressure-relieving devices given in Pars. UG-125 through UG-134 shall apply without supplement to brazed pressure vessels.

Subsection C

Requirements Pertaining to Classes of Materials

Part UCS

Requirements for Pressure Vessels Constructed of Carbon and Low-Alloy Steels[1]

GENERAL

UCS-1 Scope

The rules in Part UCS are applicable to pressure vessels and vessel parts that are constructed of carbon and low-alloy steels and shall be used in conjunction with the general requirements in Subsection A, and with the specific requirements in Subsection B that pertain to the method of fabrication used.

MATERIALS

UCS-5 General

(a) All carbon and low-alloy steel material subject to stress due to pressure shall conform to one of the specifications given in Section II of the Code and shall be limited to those listed in Table UCS-23 except as otherwise provided in Pars. UG-10 and UG-11.

(b) Carbon or low-alloy steel having a carbon content of more than 0.35 per cent by ladle analysis shall not be used in welded construction or be shaped by oxygen cutting (except as provided elsewhere in this Division).

(c) Small parts used under the provisions of Par. UG-11(a)(2) in welded construction shall be of good weldable quality.

UCS-6 Steel Plates

(a) Approved specifications for carbon and low-alloy steel plates are given in Table UCS-23 together with a tabulation of allowable stress values at different temperatures (see Par. UG-6).

(b) Steel plates conforming to Specifications
SA-7 Steel for Bridges and Buildings,
SA-36 Structural Steel,
SA-113 (Grade C) Structural Steel for Locomotives and Cars,
SA-283 (Grades A, B, C, and D) Low and Intermediate Tensile Strength Carbon Steel Plates of Structural Quality,
may be used for pressure parts in pressure vessels provided all of the following requirements are met:

(1) The vessels are not used to contain lethal substances, either liquid or gaseous;

(2) The material is not used in the construction of unfired steam boilers (see Par. U-1(e));

[1] Low-alloy steels — those alloy steels listed in Tables UCS-23 and UCS-27.

(3) The design temperature at which the material is used is between –20 F and 650 F;

(4) The thickness of plates on which strength welding is applied does not exceed ⅝ in.;

(5) The steel is manufactured by the electric furnace or open hearth process or by the basic oxygen process provided this process is permitted in the material specification.

(c) Steel plate conforming to specification SA-433 may be used for pressure parts in unfired pressure vessels provided all the following requirements are met:

(1) The maximum allowable stress values between –20 F and 550 F shall be one-fourth of the minimum specified tensile strength shown in Table UCS-23;

(2) The maximum thickness of welds shall be 2 in;

(3) Overlay or joining by welding of these materials with stainless steels or other high alloys is prohibited. These materials shall be welded only with carbon steel filler materials.

UCS-7 Steel Forgings

Approved specifications for forgings of carbon and low-alloy steel are given in Table UCS-23 together with a tabulation of allowable stress values at different temperatures (see Par. UG-7).

UCS-8 Steel Castings

(a) Approved specifications for castings of carbon and low-alloy steel are given in Table UCS-23 together with a tabulation of allowable stress values at different temperatures. These stress values are to be multiplied by the casting quality factors of Par. UG-24. Castings that are to be welded shall be of weldable grade.

(b) Cast steel flanges and fittings complying with USAS B16.5-1961 shall be used within the ratings assigned in these Standards.

UCS-9 Steel Pipe and Tubes

(a) Approved specifications for pipe and tubes of carbon and low-alloy steel and wrought iron are given in Table UCS-23 together with allowable stress values of the materials from which the pipe or tubes are manufactured. Net allowable stress values after making provision for the efficiency of the longitudinal joints in pipe or tubes of welded manufacture are given in Table UCS-27.

(b) Pressure vessels may be built of pipe fittings within pressure-temperature ratings conforming to USAS B16.5-1961.

UCS-10 Bolt and Rivet Materials

(a) *Bolts* Approved specifications for bolt materials of carbon and low-alloy steel are given in Table UCS-23 together with allowable stress values at different temperatures (see Par. UG-12).

(b) *Rivets* Rivets shall conform to Specifications SA-31, SA-84, or SA-202 Grade A, except that where special types of corrosion are expected, it may be desirable to use rivets of material conforming more closely to the chemical composition of the plate (see Par. UR-6(b)).

UCS-11 Nuts and Washers

(a) Materials for nuts and washers shall conform to Specification SA-194 or to the requirements for nuts in the specification for the bolting material with which they are to be used.

(b) Nuts shall be threaded to Class 2B or finer tolerances according to USAS B1.1-1960. Materials for nuts and washers shall be selected as follows:

(1) Carbon steel nuts and carbon steel washers may be used with carbon steel bolts or studs;

(2) Carbon or alloy steel nuts and carbon or alloy steel washers of approximately the same hardness as the nuts may be used with alloy steel bolts or studs for metal temperatures not exceeding 900 F;

(3) Alloy steel nuts shall be used with alloy steel studs or bolts for metal temperatures exceeding 900 F. Washers, if used, shall be of alloy steel equivalent to the nut material.

(c) Nuts shall be semi-finished, chamfered and trimmed. For use with flanges, conforming to the standards listed in Par. UG-44, nuts shall conform at least to the dimensions given in USAS B18.2-1965 for Heavy Series Nuts. For use with connections designed in accordance with the rules in Appendix II, nuts may be of the USA Standard Heavy Series, or they may be of other dimensions provided their strength is equal to that of the bolting, giving due consideration to bolt hole clearance, bearing area, thread form and class to fit, thread shear, and radial thrust from threads (see Par. U-2(c)).

UCS-12 Rods and Bars

(a) Approved specifications for bar materials of carbon steel are given in Table UCS-23, together with a tabulation of allowable stress values at different temperatures.

(b) Bolt and rivet materials as described in Par. UCS-10 may be used as bar materials.

(c) Parts made from bars, on which welding is done, shall be of material for which a P-Number for procedure qualification is given in Section IX, Table Q-11.1 of the Code (see Par. UW-5).

TABLE UCS-23
MAXIMUM ALLOWABLE STRESS VALUES IN TENSION FOR CARBON AND LOW-ALLOY STEEL, IN POUNDS PER SQUARE INCH
(See Par. UW-12(c) for vessels constructed under Part UW that include welded joints that are neither fully radiographed nor spot radiographically examined)

Material and Specification Number	Grade	Nominal Composition	P-Number	Spec Min Tensile	Notes	For Metal Temperatures Not Exceeding Deg F: -20 to 650	700	750	800
PLATE STEELS									
Carbon Steels									
SA-7	....	...	1	60,000	(1)(3)(19)	12,650	...	...	...
SA-36	....	...	1	58,000	(1)(3)(19)	12,650	...	...	...
SA-113	C	...	1	48,000	(1)(3)	11,050	...	...	...
SA-283	A	...	1	45,000	(1)(3)	10,350	...	...	...
SA-283	B	...	1	50,000	(1)(3)	11,500	...	...	...
SA-283	C	...	1	55,000	(1)(3)	12,650	...	...	...
SA-283	D	...	1	60,000	(1)(3)	12,650	...	...	...
SA-285	A	...	1	45,000	(2)(4)	11,250	11,000	10,250	9,000
SA-285	B	...	1	50,000	(2)(4)	12,500	12,100	11,150	9,600
SA-285	C	...	1	55,000	(2)(4)	13,750	13,250	12,050	10,200
SA-299	....	C-Mn-Si	1	75,000	...	18,750	17,700	15,650	12,600
SA-300	....	...	...	...	(13)	...	...	...	...
SA-414	A	...	1	45,000	(4)	11,250	11,000	10,250	9,000
SA-414	B	...	1	50,000	(4)	12,500	12,100	11,150	9,600
SA-414	C	...	1	55,000	(4)	13,750	13,250	12,050	10,200
SA-433	L-45	1/4 Pb	1	45,000	(25)	...	...	...	...
SA-433	L-50	1/4 Pb	1	50,000	(25)	...	...	...	...
SA-433	L-55	1/4 Pb	1	55,000	(25)	...	...	...	...
SA-433	LK-55	1/4 Pb C-Si	1	55,000	(25)	...	...	...	...
SA-433	LK-60	1/4 Pb C-Si	1	60,000	(25)	...	...	...	...
SA-433	LK-65	1/4 Pb C-Si	1	65,000	(25)	...	...	...	...
SA-433	LK-70	1/4 Pb C-Si	1	70,000	(25)	...	...	...	...
SA-442	55	C-Si	1	55,000	...	13,750	13,250	12,050	10,200
SA-442	60	C-Si	1	60,000	...	15,000	14,350	12,950	10,800
SA-455	A	...	1	75,000	(29)	18,750	...	...	...
SA-455	B	...	1	73,000	(26)	18,250	...	...	...
SA-515	55	C-Si	1	55,000	(27)	13,750	13,250	12,050	10,200
SA-515	60	C-Si	1	60,000	(27)	15,000	14,350	12,950	10,800
SA-515	65	C-Si	1	65,000	(27)	16,250	15,500	13,850	11,400
SA-515	70	C-Si	1	70,000	(27)	17,500	16,600	14,750	12,000
SA-516	55	C-Si	1	55,000	(27)	13,750	13,250	12,050	10,200
SA-516	60	C-Si	1	60,000	(27)	15,000	14,350	12,950	10,800
SA-516	65	C-Si	1	65,000	(27)	16,250	15,500	13,850	11,400
SA-516	70	C-Si	1	70,000	(27)	17,500	16,600	14,750	12,000
Low-Alloy Steels									
SA-202	A	Cr-Mn-Si	4	75,000	...	18,750	17,700	15,650	12,600
SA-202	B	Cr-Mn-Si	4	85,000	...	21,250	19,800	17,700	12,800
SA-203	A	2-1/2 Ni	9A	65,000	...	16,250	15,500	13,850	11,400
SA-203	B	2-1/2 Ni	9A	70,000	...	17,500	16,600	14,750	12,000
SA-203	D	3-1/2 Ni	9B	65,000	...	16,250	15,500	13,850	11,400
SA-203	E	3-1/2 Ni	9B	70,000	...	17,500	16,600	14,750	12,000
SA-204	A	C-1/2 Mo	3	65,000	(28)	16,250	16,250	16,250	15,650
SA-204	B	C-1/2 Mo	3	70,000	(28)	17,500	17,500	17,500	16,900
SA-204	C	C-1/2 Mo	3	75,000	(28)	18,750	18,750	18,750	18,000

TABLE UCS-23 (CONT'D)
MAXIMUM ALLOWABLE STRESS VALUES IN TENSION FOR CARBON AND LOW-ALLOY STEEL, IN POUNDS PER SQUARE INCH
(See Par. UW-12(c) for vessels constructed under Part UW that include welded joints that are neither fully radiographed nor spot radiographically examined)

For Metal Temperatures Not Exceeding Deg F: 850	900	950	1000	1050	1100	1150	1200	Material and Specification Number	Grade
								PLATE STEELS	
								Carbon Steels	
...	...	...	...	...	...	...	...	SA-7	....
...	...	...	...	...	...	...	...	SA-36	....
...	...	...	...	...	...	...	...	SA-113	C
...	...	...	...	...	...	...	...	SA-283	A
...	...	...	...	...	...	...	...	SA-283	B
...	...	...	...	...	...	...	...	SA-283	C
...	...	...	...	...	...	...	...	SA-283	D
7,750	6,500	...	...	...	...	...	...	SA-285	A
8,050	6,500	...	...	...	...	...	...	SA-285	B
8,350	6,500	...	...	...	...	...	...	SA-285	C
9,550	6,500	4,500	2,500	...	...	...	...	SA-299	....
...	...	...	...	...	...	...	...	SA-300	....
7,750	6,500	...	...	...	...	...	...	SA-414	A
8,050	6,500	...	...	...	...	...	...	SA-414	B
8,350	6,500	...	...	...	...	...	...	SA-414	C
...	...	...	...	...	...	...	...	SA-433	L-45
...	...	...	...	...	...	...	...	SA-433	L-50
...	...	...	...	...	...	...	...	SA-433	L-55
...	...	...	...	...	...	...	...	SA-433	LK-55
...	...	...	...	...	...	...	...	SA-433	LK-60
...	...	...	...	...	...	...	...	SA-433	LK-65
...	...	...	...	...	...	...	...	SA-433	LK-70
8,350	...	...	...	...	...	...	...	SA-442	55
8,650	...	...	...	...	...	...	...	SA-442	60
...	...	...	...	...	...	...	...	SA-455	A
...	...	...	...	...	...	...	...	SA-455	B
8,350	6,500	4,500	2,500	...	...	...	...	SA-515	55
8,650	6,500	4,500	2,500	...	...	...	...	SA-515	60
8,950	6,500	4,500	2,500	...	...	...	...	SA-515	65
9,250	6,500	4,500	2,500	...	...	...	...	SA-515	70
8,350	...	...	...	...	...	...	...	SA-516	55
8,650	...	...	...	...	...	...	...	SA-516	60
8,950	...	...	...	...	...	...	...	SA-516	65
9,250	...	...	...	...	...	...	...	SA-516	70
								Low-Alloy Steels	
9,550	6,500	4,500	2,500	...	...	...	...	SA-202	A
9,900	6,500	4,500	2,500	...	...	...	...	SA-202	B
8,950	6,500	4,500	2,500	...	...	...	...	SA-203	A
9,250	6,500	4,500	2,500	...	...	...	...	SA-203	B
8,950	6,500	4,500	2,500	...	...	...	...	SA-203	D
9,250	6,500	4,500	2,500	...	...	...	...	SA-203	E
14,400	12,500	10,000	6,250	...	...	...	...	SA-204	A
15,000	12,750	10,000	6,250	...	...	...	...	SA-204	B
15,900	13,000	10,000	6,250	...	...	...	...	SA-204	C

TABLE UCS-23 (CONT'D)
MAXIMUM ALLOWABLE STRESS VALUES IN TENSION FOR CARBON AND LOW-ALLOY STEEL, IN POUNDS PER SQUARE INCH
(See Par. UW-12(c) for vessels constructed under Part UW that include welded joints that are neither fully radiographed nor spot radiographically examined)

Material and Specification Number	Grade	Nominal Composition	P-Number	Spec Min Tensile	Notes	For Metal Temperatures Not Exceeding Deg F: −20 to 650	700	750	800
PLATE STEELS Low-Alloy Steels (Cont'd)									
SA-225	A	Mn-V	10A	70,000	(12)	17,500	17,500	17,500	...
SA-225	B	Mn-V	10A	75,000	(12)	18,750	18,750	18,750	...
SA-302	A	Mn-1/2 Mo	3	75,000	...	18,750	18,750	18,750	18,000
SA-302	B	Mn-1/2 Mo	3	80,000	...	20,000	20,000	20,000	19,100
SA-357	....	5 Cr-1/2 Mo	5	60,000	(14)	...	13,400	13,100	12,800
SA-387	A	1/2 Cr-1/2 Mo	3	65,000	...	16,250	16,250	16,250	15,650
SA-387	B	1 Cr-1/2 Mo	4	60,000	...	15,000	15,000	15,000	14,750
SA-387	C	1-1/4 Cr-1/2 Mo-Si	4	60,000	...	15,000	15,000	15,000	15,000
SA-387	D	2-1/4 Cr-1 Mo	5	60,000	...	15,000	15,000	15,000	15,000
SA-387	E	3 Cr-1 Mo	5	60,000	...	15,000	14,800	14,500	13,900
SA-410	....	Cr-Cu-Ni-Al	4	60,000	...	15,000	...	...	...
SA 533	A, Class 1	C, Mn, Mo	12B Sub 1	80,000	...	20,000	20,000	20,000	19,100
SA 533	B, Class 1	C, Mn, Mo, 0.4-0.7 Ni	12B Sub 1	80,000	...	20,000	20,000	20,000	19,100
SA 533	C, Class 1	C, Mn, Mo, 0.7-1.0 Ni	12B Sub 1	80,000	...	20,000	20,000	20,000	19,100
PIPES & TUBES									
Seamless Carbon Steels									
SA-53	A	...	1	48,000	(4)(6)(27)	12,000	11,650	10,700	9,300
SA-53	B	...	1	60,000	(4)(6)(27)	15,000	14,350	12,950	10,800
SA-83	A	...	1	...	(4)(6)(27)	11,750	11,450	10,550	9,200
SA-106	A	...	1	48,000	(27)	12,000	11,650	10,700	9,300
SA-106	B	...	1	60,000	(27)	15,000	14,350	12,950	10,800
SA-106	C	...	1	70,000	(27)	17,500	16,600	14,750	12,000
SA-179	....	...	1	...	(4)(6)(27)	11,750	11,450	10,550	9,200
SA-192	....	...	1	...	(27)	11,750	11,450	10,550	9,200
SA-210	A-1	...	1	60,000	(27)	15,000	14,350	12,950	10,800
SA-210	C	...	1	70,000	...	17,500	16,600	14,750	12,000
SA-333	1	...	1	55,000	...	13,750	...	...	...
SA-333	6	...	1	60,000	...	15,000	...	...	...
SA-334	O	...	1	55,000	...	13,750	...	...	...
SA-334	6	...	1	60,000	...	15,000	...	...	...
Seamless Low-Alloy Steels									
SA-199	T3b	2 Cr-1/2 Mo	4	60,000	...	15,000	15,000	15,000	14,700
SA-199	T5	5 Cr-1/2 Mo	5	60,000	(14)	...	13,400	13,100	12,800
SA-199	T7	7 Cr-1/2 Mo	5	60,000	(14)	...	13,400	13,100	12,500
SA-199	T9	9 Cr-1 Mo	5	60,000	(14)	...	13,400	13,100	12,800
SA-199	T11	1-1/4 Cr-1/2 Mo-Si	4	60,000	...	15,000	15,000	15,000	15,000
SA-199	T21	3 Cr-0.9 Mo	5	60,000	...	15,000	14,800	14,500	13,900
SA-199	T22	2-1/4 Cr-1 Mo	5	60,000	...	15,000	15,000	15,000	15,000
SA-209	T1	C-1/2 Mo	3	55,000	(28)	13,750	13,750	13,750	13,450
SA-209	T1a	C-1/2 Mo	3	60,000	(28)	15,000	15,000	15,000	14,400
SA-209	T1b	C-1/2 Mo	3	53,000	(28)	13,250	13,250	13,250	13,000
SA-213	T2	1/2 Cr-1/2 Mo	3	60,000	...	15,000	15,000	15,000	14,400
SA-213	T5	5 Cr-1/2 Mo	5	60,000	(14)	...	13,400	13,100	12,800
SA-213	T7	7 Cr-1/2 Mo	5	60,000	(14)	...	13,400	13,100	12,500
SA-213	T9	9 Cr-1 Mo	5	60,000	(14)	...	13,400	13,100	12,800
SA-213	T11	1-1/4 Cr-1/2 Mo-Si	4	60,000	...	15,000	15,000	15,000	15,000
SA-213	T12	1 Cr-1/2 Mo	4	60,000	...	15,000	15,000	15,000	14,750
SA-213	T5b	5 Cr-1/2 Mo-Si	5	60,000	(14)	...	13,400	13,100	12,800

TABLE UCS-23 (CONT'D)
MAXIMUM ALLOWABLE STRESS VALUES IN TENSION FOR CARBON AND LOW-ALLOY STEEL, IN POUNDS PER SQUARE INCH
(See Par. UW-12(c) for vessels constructed under Part UW that include welded joints that are neither fully radiographed nor spot radiographically examined)

For Metal Temperatures Not Exceeding Deg F: 850	900	950	1000	1050	1100	1150	1200	Material and Specification Number	Grade
								PLATE STEELS (Cont'd)	
...	...	...	...	...	...	...	...	SA-225	A
...	...	...	...	...	...	...	...	SA-225	B
15,900	13,000	10,000	6,250	...	...	...	...	SA-302	A
16,800	13,250	10,000	6,250	...	...	...	...	SA-302	B
12,400	11,500	10,000	7,300	5,200	3,300	2,200	1,500	SA-357	....
14,400	12,500	10,000	6,250	...	...	...	...	SA-387	A
14,200	13,100	11,000	7,500	5,000	2,800	1,550	1,000	SA-387	B
14,400	13,100	11,000	7,800	5,500	4,000	2,500	1,200	SA-387	C
14,400	13,100	11,000	7,800	5,800	4,200	3,000	2,000	SA-387	D
13,200	12,000	9,000	7,000	5,500	4,000	2,700	1,500	SA-387	E
...	...	...	...	...	...	...	...	SA-410	....
16,800	13,250	10,000	6,250	...	...	...	...	SA-533	A, Class 1
...	...	...	...	...	...	...	...	SA-533	B, Class 1
...	...	...	...	...	...	...	...	SA-533	C, Class 1
								PIPES & TUBES	
								Seamless Carbon Steels	
7,900	6,500	...	...	...	...	...	...	SA-53	A
8,650	6,500	...	...	...	...	...	...	SA-53	B
7,850	6,500	...	...	...	...	...	...	SA-83	A
7,900	6,500	4,500	2,500	...	...	...	...	SA-106	A
8,650	6,500	4,500	2,500	...	...	...	...	SA-106	B
...	...	...	...	...	...	...	...	SA-106	C
7,850	6,500	...	...	...	...	...	...	SA-179	....
7,850	6,500	4,500	2,500	...	...	...	...	SA-192	....
8,650	6,500	4,500	2,500	...	...	...	...	SA-210	A1
...	...	...	...	...	...	...	...	SA-210	C
...	...	...	...	...	...	...	...	SA-333	1
...	...	...	...	...	...	...	...	SA-333	6
...	...	...	...	...	...	...	...	SA-334	O
...	...	...	...	...	...	...	...	SA-334	6
								Seamless Low-Alloy Steels	
14,000	12,500	10,000	6,200	4,200	2,750	1,750	1,200	SA-199	T3b
12,400	11,500	10,000	7,300	5,200	3,300	2,200	1,500	SA-199	T5
11,500	9,500	7,000	5,000	3,500	2,500	1,800	1,200	SA-199	T7
12,500	12,000	10,800	8,500	5,500	3,300	2,200	1,500	SA-199	T9
14,400	13,100	11,000	7,800	5,500	4,000	2,500	1,200	SA-199	T11
13,200	12,000	9,000	7,000	5,500	4,000	2,700	1,500	SA-199	T21
14,400	13,100	11,000	7,800	5,800	4,200	3,000	2,000	SA-199	T22
13,150	12,500	10,000	6,250	...	...	...	...	SA-209	T1
13,750	12,500	10,000	6,250	...	...	...	...	SA-209	T1a
12,750	12,500	10,000	6,250	...	...	...	...	SA-209	T1b
13,750	12,500	10,000	6,250	...	...	...	...	SA-213	T2
12,400	11,500	10,000	7,300	5,200	3,300	2,200	1,500	SA-213	T5
11,500	9,500	7,000	5,000	3,500	2,500	1,800	1,200	SA-213	T7
12,500	12,000	10,800	8,500	5,500	3,300	2,200	1,500	SA-213	T9
14,400	13,100	11,000	7,800	5,500	4,000	2,500	1,200	SA-213	T11
14,200	13,100	11,000	7,500	5,000	2,800	1,550	1,000	SA-213	T12
12.400	10,900	9,000	5,500	3,500	2,500	1,800	1,200	SA-213	T5b

TABLE UCS-23 (CONT'D)
MAXIMUM ALLOWABLE STRESS VALUES IN TENSION FOR CARBON AND LOW-ALLOY STEEL, IN POUNDS PER SQUARE INCH
(See Par. UW-12(c) for vessels constructed under Part UW that include welded joints that are neither fully radiographed nor spot radiographically examined)

Material and Specification Number	Grade	Nominal Composition	P-Number	Spec Min Tensile	Notes	For Metal Temperatures Not Exceeding Deg F: −20 to 650	700	750	800
PIPES & TUBES Seamless Low-Alloy Steels (Cont'd)									
SA-213	T5c	5 Cr-1/2 Mo-Ti	5	60,000	(14)	...	13,400	13,100	12,800
SA-213	T17	1 Cr-V	10B	60,000	(5)	15,000	...	...	...
SA-213	T21	3 Cr-0.9 Mo	5	60,000	...	15,000	14,800	14,500	13,900
SA-213	T22	2-1/4 Cr-1 Mo	5	60,000	...	15,000	15,000	15,000	15,000
SA-333	3	3-1/2 Ni	9B	65,000	...	16,250	...	...	...
SA-333	4	Cr-Cu-Ni-Al	4	60,000	...	15,000	...	...	...
SA-333	7	2½ Ni	9A	65,000	...	16,250	...	...	...
SA-334	3	3-1/2 Ni	9B	65,000	...	16,250	...	...	...
SA-334	7	2½ Ni	9A	65,000	...	16,250	...	...	...
SA-335	P1	C-1/2 Mo	3	55,000	(28)	13,750	13,750	13,750	13,450
SA-335	P2	1/2 Cr-1/2 Mo	3	55,000	...	13,750	13,750	13,750	13,450
SA-335	P5	5 Cr-1/2 Mo	5	60,000	(14)	...	13,400	13,100	12,800
SA-335	P5b	5 Cr-1/2 Mo-Si	5	60,000	(14)	...	13,400	13,100	12,800
SA-335	P5c	5 Cr-1/2 Mo-Ti or Cb	5	60,000	(14)	...	13,400	13,100	12,800
SA-335	P11	1-1/4 Cr-1/2 Mo-Si	4	60,000	...	15,000	15,000	15,000	15,000
SA-335	P12	1 Cr-1/2 Mo	4	60,000	...	15,000	15,000	15,000	14,750
SA-335	P15	1-1/2 Si-1/2 Mo	3	60,000	...	15,000	15,000	15,000	14,400
SA-335	P7	7 Cr-1/2 Mo	5	60,000	(14)	...	13,400	13,100	12,500
SA-335	P9	9 Cr-1 Mo	5	60,000	(14)	...	13,400	13,100	12,800
SA-335	P21	3 Cr-0.9 Mo	5	60,000	...	15,000	14,800	14,500	13,900
SA-335	P22	2-1/4 Cr-1 Mo	5	60,000	...	15,000	15,000	15,000	15,000
SA-369	FP1	C-1/2 Mo	3	55,000	(28)	13,750	13,750	13,750	13,450
SA-369	FP2	1/2 Cr-1/2 Mo	3	55,000	...	13,750	13,750	13,750	13,450
SA-369	FP3b	2 Cr-1/2 Mo	4	60,000	...	15,000	15,000	15,000	14,700
SA-369	FP11	1-1/4 Cr-1/2 Mo-Si	4	60,000	...	15,000	15,000	15,000	15,000
SA-369	FP12	1 Cr-1/2 Mo	4	60,000	...	15,000	15,000	15,000	14,750
SA-369	FP21	3 Cr-1 Mo	5	60,000	...	15,000	14,800	14,500	13,900
SA-369	FP22	2-1/4 Cr-1 Mo	5	60,000	...	15,000	15,000	15,000	15,000
SA-369	FP5	5 Cr-1/2 Mo	5	60,000	(14)	...	13,400	13,100	12,800
SA-369	FP7	7 Cr-1/2 Mo	5	60,000	(14)	...	13,400	13,100	12,500
SA-369	FP9	9 Cr-1 Mo	5	60,000	(14)	...	13,400	13,100	12,800
SA-423	1	3/4 Cr-1/2 Ni-0.4 Cu	4	60,000	...	15,000	...	...	...
SA-423	2	3/4 Ni-0.6 Cu-0.1 Mo	4	60,000	...	15,000	...	...	...
FORGINGS									
Carbon Steels									
SA-105	I	...	1	60,000	(4)(27)	15,000	14,350	12,950	10,800
SA-105	II	...	1	70,000	(4)(27)	17,500	16,600	14,750	12,000
SA-181	I	...	1	60,000	(4)(27)	15,000	14,350	12,950	10,800
SA-181	II	...	1	70,000	(4)(27)	17,500	16,600	14,750	12,000
SA-266	I	...	1	60,000	(27)	15,000	14,350	12,950	10,800
SA-266	II	...	1	70,000	(27)	17,500	16,600	14,750	12,000
SA-266	III	...	...	75,000	(27)	18,750	17,700	15,650	12,600
SA-350	LF1	...	1	60,000	...	15,000	...	...	...
SA-350	LF2	...	1	70,000	...	17,500	...	...	...
SA-372	I	...	1	60,000	(20)(23)	See Note 24	...	...	...
SA-372	II	...	...	75,000	(20)(22)(23)				
SA-372	III	...	...	90,000	(20)(22)(23)				

TABLE UCS-23 (CONT'D)
MAXIMUM ALLOWABLE STRESS VALUES IN TENSION FOR CARBON AND LOW-ALLOY STEEL, IN POUNDS PER SQUARE INCH
(See Par. UW-12(c) for vessels constructed under Part UW that include welded joints that are neither fully radiographed nor spot radiographically examined)

For Metal Temperatures Not Exceeding Deg F: 850	900	950	1000	1050	1100	1150	1200	Material and Specification Number	Grade
								PIPES & TUBES (Cont'd)	
12,400	11,500	10,000	7,300	4,800	2,800	1,800	1,200	SA-213	T5c
...	...	...	...	...	...	...	...	SA-213	T17
13,200	12,000	9,000	7,000	5,500	4,000	2,700	1,500	SA-213	T21
14,400	13,100	11,000	7,800	5,800	4,200	3,000	2,000	SA-213	T22
...	...	...	...	...	...	...	...	SA-333	3
...	...	...	...	...	...	...	...	SA-333	4
...	...	...	...	...	...	...	...	SA-333	7
...	...	...	...	...	...	...	...	SA-334	3
...	...	...	...	...	...	...	...	SA-334	7
13,150	12,500	10,000	6,250	...	...	...	...	SA-335	P1
13,150	12,500	10,000	6,250	...	...	...	...	SA-335	P2
12,400	11,500	10,000	7,300	5,200	3,300	2,200	1,500	SA-335	P5
12,400	10,900	9,000	5,500	3,500	2,500	1,800	1,200	SA-335	P5b
12,400	11,500	10,000	7,300	4,800	2,800	1,800	1,200	SA-335	P5c
14,400	13,100	11,000	7,800	5,500	4,000	2,500	1,200	SA-335	P11
14,200	13,100	11,000	7,500	5,000	2,800	1,550	1,000	SA-335	P12
13,750	12,500	10,000	6,250	...	...	...	...	SA-335	P15
11,500	9,500	7,000	5,000	3,500	2,500	1,800	1,200	SA-335	P7
12,500	12,000	10,800	8,500	5,500	3,300	2,200	1,500	SA-335	P9
13,200	12,000	9,000	7,000	5,500	4,000	2,700	1,500	SA-335	P21
14,400	13,100	11,000	7,800	5,800	4,200	3,000	2,000	SA-335	P22
13,150	12,500	10,000	6,250	...	...	...	...	SA-369	FP1
13,150	12,500	10,000	6,250	...	...	...	...	SA-369	FP2
14,000	12,500	10,000	6,200	4,200	2,750	1,750	1,200	SA-369	FP3b
14,400	13,100	11,000	7,800	5,500	4,000	2,500	1,200	SA-369	FP11
14,200	13,100	11,000	7,500	5,000	2,800	1,550	1,000	SA-369	FP12
13,200	12,000	9,000	7,000	5,500	4,000	2,700	1,500	SA-369	FP21
14,400	13,100	11,000	7,800	5,800	4,200	3,000	2,000	SA-369	FP22
12,400	11,500	10,000	7,300	5,200	3,300	2,200	1,500	SA-369	FP5
11,500	9,500	7,000	5,000	3,500	2,500	1,800	1,200	SA-369	FP7
12,500	12,000	10,800	8,500	5,500	3,300	2,200	1,500	SA-369	FP9
...	...	...	...	...	...	...	...	SA-423	1
...	...	...	...	...	...	...	...	SA-423	2
								FORGINGS	
								Carbon Steels	
8,650	6,500	4,500	2,500	...	...	...	...	SA-105	I
9,250	6,500	4,500	2,500	...	...	...	...	SA-105	II
8,650	6,500	4,500	2,500	...	...	...	...	SA-181	I
9,250	6,500	4,500	2,500	...	...	...	...	SA-181	II
8,650	6,500	4,500	2,500	...	...	...	...	SA-266	I
9,250	6,500	4,500	2,500	...	...	...	...	SA-266	II
9,550	6,500	4,500	2,500	...	...	...	...	SA-266	III
...	...	...	...	...	...	...	...	SA-350	LF1
...	...	...	...	...	...	...	...	SA-350	LF2
...	...	...	...	...	...	...	...	SA-372	I
								SA-372	II
								SA-372	III

TABLE UCS-23 (CONT'D)
MAXIMUM ALLOWABLE STRESS VALUES IN TENSION FOR CARBON AND LOW-ALLOY STEEL, IN POUNDS PER SQUARE INCH

(See Par. UW-12(c) for vessels constructed under Part UW that include welded joints that are neither fully radiographed nor spot radiographically examined)

Material and Specification Number	Grade	Nominal Composition	P-Number	Spec Min Tensile	Notes	For Metal Temperatures Not Exceeding Deg F: – 20 to 650	700	750	800
FORGINGS (Cont'd)									
Low-Alloy Steels									
SA-182	F1	C-1/2 Mo	3	70,000	(28)	17,500	17,500	17,500	16,900
SA-182	F12	1 Cr-1/2 Mo	4	70,000	(14)	...	16,150	15,500	14,850
SA-182	F5	5 Cr-1/2 Mo	5	60,000	(14)	...	13,400	13,100	12,800
SA-182	F5a	5 Cr-1/2 Mo	5	90,000	(14)	...	17,500	16,000	14,500
SA-182	F7	7 Cr-1/2 Mo	5	60,000	(14)	...	13,400	13,100	12,500
SA-182	F11	1-1/4 Cr-1/2 Mo	4	70,000	(14)	...	16,150	15,500	15,000
SA-182	F9	9 Cr-1 Mo	5	100,000	(14)	...	21,200	20,000	17,700
SA-182	F21	3 Cr-0.9 Mo	5	70,000	(14)	...	15,100	14,600	13,900
SA-182	F22	2-1/4 Cr-1 Mo	5	70,000	...	17,500	17,500	17,500	17,500
SA-336	F1	C-1/2 Mo	3	70,000	(28)	17,500	17,500	17,500	16,900
SA-336	F2	1 Cr-1/2 Mo	4	70,000	(14)	...	16,150	15,500	14,850
SA-336	F5	5 Cr-1/2 Mo	5	60,000	(14)	...	13,400	13,100	12,800
SA-336	F5a	5 Cr-1/2 Mo	5	80,000	(14)	...	16,500	15,500	14,500
SA-336	F22	2-1/4 Cr-1 Mo	5	70,000	(14)	17,500	17,500	17,500	17,500
SA-350	LF3	3-1/2 Ni	9B	70,000	...	17,500	...	...	...
SA-350	LF4	Cr-Cu-Ni-Al	4	60,000	...	15,000	...	...	...
SA-372	IV	1/4 Mo	...	105,000	(20)(22)(23)	See Note 24	...	...	...
SA-372	V (A,B&E)	1 Cr-1/5 Mo	...	120,000	(21)(23)	See Note 24	...	...	...
SA-372	V (C&D)	1/2 Cr-1/2 Ni-1/5 Mo	...	120,000	(21)(23)	See Note 24	...	...	...
CASTINGS					(7)				
Carbon Steels									
SA-216	WCA	...	1	60,000	(27)	15,000	14,350	12,950	10,800
SA-216	WCB	...	1	70,000	(27)	17,500	16,600	14,750	12,000
SA-216	WCC	...	1	70,000	(27)	17,500	16,600	14,750	12,000
SA-352	LCB	...	...	65,000		16,250	...	...	...
Low-Alloy Steels									
SA-217	WC1	C-1/2 Mo	3	65,000	(8)	16,250	16,250	16,250	15,650
SA-217	WC4	Ni-Cr-1/2 Mo	4	70,000	(8)	17,500	17,500	17,500	17,000
SA-217	WC5	Ni-Cr-1 Mo	4	70,000	(8)	17,500	17,500	17,500	17,000
SA-217	WC6	1-1/4 Cr-1/2 Mo	4	70,000	(8)	17,500	17,500	17,500	17,000
SA-217	WC9	2-1/4 Cr-1 Mo	5	70,000	(8)	17,500	17,500	17,500	17,000
SA-217	C5	5 Cr-1/2 Mo	5	90,000	(8)	22,500	21,600	20,400	19,000
SA-217	C12	9 Cr-1 Mo	5	90,000	(8)	22,500	22,000	21,000	19,400
SA-352	LC1	C-1/2 Mo	3	65,000	...	16,250	...	...	...
SA-352	LC2	2-1/2 Ni	9A	65,000	...	16,250	...	...	...
SA-352	LC3	3-1/2 Ni	9B	65,000	...	16,250	...	...	...
SA-487	1N	1.0 Mn-0.10 V	10A	85,000	(14)	...	...	...	...
SA-487	4N	½ Ni-½ Cr	10F	90,000	(14)	...	...	...	...
SA-487	8N	2 Cr-1.0 Mo	10F	85,000	(14)	...	...	...	...
BOLTING									
Carbon Steels									
SA-307	B	...	...	55,000	(11)	...	...	...	...
SA-325	....	...	...	...	(9)(10)	18,750	17,200	15,650	...
Low-Alloy Steels									
SA-193	B5	5 Cr-1/2 Mo	...	...	(9)(10)	20,000	20,000	20,000	20,000
SA-193	B7	1 Cr-0.2 Mo	...	...	(9)(10)	20,000	20,000	20,000	20,000

TABLE UCS-23 (CONT'D)
MAXIMUM ALLOWABLE STRESS VALUES IN TENSION FOR CARBON AND LOW-ALLOY STEEL, IN POUNDS PER SQUARE INCH

(See Par. UW-12(c) for vessels constructed under Part UW that include welded joints that are neither fully radiographed nor spot radiographically examined)

For Metal Temperatures Not Exceeding Deg F: 850	900	950	1000	1050	1100	1150	1200	Material and Specification Number	Grade
								FORGINGS (Cont'd)	
								Low-Alloy Steels	
15,000	12,750	10,000	6,250	...	...	...	...	SA-182	F1
14,200	13,100	11,000	7,500	5,000	2,800	1,550	1,000	SA-182	F12
12,400	11,500	10,000	7,300	5,200	3,300	2,200	1,500	SA-182	F5
13,000	11,500	10,000	7,300	5,200	3,300	2,200	1,500	SA-182	F5a
11,500	9,500	7,000	5,000	3,500	2,500	1,800	1,200	SA-182	F7
14,400	13,100	11,000	7,800	5,500	4,000	2,500	1,200	SA-182	F11
15,400	13,100	10,800	8,500	5,500	3,300	2,200	1,500	SA-182	F9
13,200	12,000	9,000	7,000	5,500	4,000	2,700	1,500	SA-182	F21
16,000	14,000	11,000	7,800	5,800	4,200	3,000	2,000	SA-182	F22
15,000	12,750	10,000	6,250	...	...	...	...	SA-336	F1
14,200	13,100	11,000	7,500	5,000	2,800	1,550	1,000	SA-336	F2
12,400	11,500	10,000	7,300	5,200	3,300	2,200	1,500	SA-336	F5
13,000	11,500	10,000	7,300	5,200	3,300	2,200	1,500	SA-336	F5a
16,000	14,000	11,000	7,800	5,800	4,200	3,000	2,000	SA-336	F22
...	...	...	...	...	...	...	...	SA-350	LF3
...	...	...	...	...	...	...	...	SA-350	LF4
...	...	...	...	...	...	...	...	SA-372	IV
...	...	...	...	...	...	...	...	SA-372	V (A,B&E
...	...	...	...	...	...	...	...	SA-372	V (C&D)
8,650	6,500	4,500	2,500	...	...	...	...	CASTINGS	
9,250	6,500	4,500	2,500	...	...	...	...	Carbon Steels	
9,250	6,500	4,500	2,500	...	...	...	...	SA-216	WCA
...	...	...	...	...	...	...	...	SA-216	WCB
								SA-216	WCC
								SA-352	LCB
14,400	12,500	10,000	6,250	...	...	...	...	Low-Alloy Steels	
15,800	14,000	10,000	6,250	...	...	...	...	SA-217	WC1
15,800	14,000	11,000	7,800	5,500	4,000	...	...	SA-217	WC4
15,800	14,000	11,000	7,800	5,500	4,000	...	...	SA-217	WC5
15,800	14,000	11,000	7,800	5,800	4,200	3,000	2,000	SA-217	WC6
17,000	13,600	10,000	7,300	5,200	3,300	2,200	1,500	SA-217	WC9
17,300	15,000	11,750	8,500	5,500	3,300	2,200	1,500	SA-217	C5
...	...	...	...	...	...	...	...	SA-217	C12
...	...	...	...	...	...	...	...	SA-352	LC1
...	...	...	...	...	...	...	...	SA-352	LC2
...	...	...	...	...	...	...	...	SA-352	LC3
...	...	...	...	...	...	...	...	SA-487	1N
...	...	...	...	...	...	...	...	SA-487	4N
...	...	...	...	...	...	...	...	SA-487	8N
...	...	...	...	...	...	...	...	BOLTING	
...	...	...	...	...	...	...	...	Carbon Steels	
...	...	...	...	...	...	...	...	SA-307	B
								SA-325	....
17,250	13,750	10,300	7,300	4,800	2,750	...	...	Low-Alloy Steels	
16,250	12,500	8,500	4,500	...	...	...	...	SA-193	B5
								SA-193	B7

TABLE UCS-23 (CONT'D)
MAXIMUM ALLOWABLE STRESS VALUES IN TENSION FOR CARBON AND LOW-ALLOY STEEL, IN POUNDS PER SQUARE INCH
(See Par. UW-12 (c) for vessels constructed under Part UW that include welded joints that are neither fully radiographed nor spot radiographically examined)

Material and Specification Number	Grade	Nominal Composition	P-Number	Spec Min Tensile	Notes	For Metal Temperatures Not Exceeding Deg F: -20 to 650	700	750	800
BOLTING Low-Alloy Steels (Cont'd)									
SA-193	B14	1 Cr-0.3 Mo-V	...	...	(9)(10)	20,000	20,000	20,000	20,000
SA-193	B16	1 Cr-1/2 Mo-V	...	...	(9)(10)	20,000	20,000	20,000	20,000
SA-320	L7, L9, L10, L43	...	...	...	(9)(15)	...	...	...	...
SA-354	BB	...	...	...	(9)(10)	18,750	17,200	15,650	...
SA-354	BC	...	...	...	(9)(10)	20,000	18,400	16,750	...
SA-354	BD	...	...	...	(9)(10)	20,000	18,400	16,750	...
BARS & RIVET STEEL									
Carbon Steels									
SA-31	A	...	...	45,000	(4)	11,250	11,000	10,250	9,000
SA-31	B	...	...	58,000	(4)	14,500	13,900	12,600	10,550
SA-306	45	...	...	45,000	(4)	11,250	11,000	10,250	9,000
SA-306	50	...	...	50,000	(4)	12,500	12,100	11,150	9,600
SA-306	55	...	...	55,000	(4)	13,750	13,250	12,050	10,200
SA-306	60	...	...	60,000	(4)	15,000	14,350	12,950	10,800
SA-306	65	...	...	65,000	(4)	16,250	15,500	13,850	11,400
SA-306	70	...	...	70,000	(4)	17,500	16,600	14,750	12,000

TABLE UCS-23 (CONT'D)
MAXIMUM ALLOWABLE STRESS VALUES IN TENSION FOR CARBON AND LOW-ALLOY STEEL, IN POUNDS PER SQUARE INCH
(See Par. UW-12 (c) for vessels constructed under Part UW that include welded joints that are neither fully radiographed nor spot radiographically examined)

For Metal Temperatures Not Exceeding Deg F: 850	900	950	1000	1050	1100	1150	1200	Material and Specification Number	Grade
								BOLTING (Cont'd)	
18,750	16,650	14,250	11,000	6,250	2,750	...	...	SA-193	B14
18,750	16,650	14,250	11,000	6,250	2,750	...	...	SA-193	B16
...	...	...	...	...	...	...	...	SA-320	L7, L9, L10, L43
...	...	...	...	...	...	...	...	SA-354	BB
...	...	...	...	...	...	...	...	SA-354	BC
...	...	...	...	...	...	...	...	SA-354	BD
								BARS & RIVET STEEL	
								Carbon Steels	
7,750	6,500	...	...	...	...	...	...	SA-31	A
8,550	6,500	...	...	...	...	...	...	SA-31	B
7,750	6,500	...	...	...	...	...	...	SA-306	45
8,050	6,500	...	...	...	...	...	...	SA-306	50
8,350	6,500	...	...	...	...	...	...	SA-306	55
8,650	6,500	...	...	...	...	...	...	SA-306	60
8,950	6,500	4,500	2,500	...	...	...	...	SA-306	65
9,250	6,500	4,500	2,500	...	...	...	...	SA-306	70

(Notes for Tables UCS-23 on pages 112 and 113).

TABLE UCS-23 (CONT'D)

NOTES: The stress values in this table may be interpolated to determine values for intermediate temperatures.

Stress values in restricted shear such as dowel bolts, rivets, or similar construction in which the shearing member is so restricted that the section under consideration would fail without reduction of area shall be 0.80 times the values in the above table.

Stress values in bearing shall be 1.60 times the values in the above table.

(1) See Par. UCS-6(b).
(3) These stress values are one-fourth the specified minimum tensile strength multiplied by a quality factor of 0.92, except for SA-283, Grade D, SA-7 and SA-36.
(4) For service temperatures above 850 F it is recommended that killed steels containing not less than 0.10% residual silicon be used. Killed steels which have been deoxidized with large amounts of aluminum and rimmed steels may have creep and stress-rupture properties in the temperature range above 850 F, which are somewhat less than those on which the values in the above table are based.
(5) Between temperatures of 650 F and 1000 F, inclusive, the stress values for Specification SA-201, Grade B, may be used until high temperature test data become available.
(6) Only killed steel shall be used above 850 F.
(7) To these stress values a quality factor as specified in Par. UG-24 shall be applied for castings.
(8) These stress values apply to normalized and drawn material only.
(9) These stress values are established from a consideration of strength only and will be satisfactory for average service. For bolted joints, where freedom from leakage over a long period of time without retightening is required, lower stress values may be necessary as determined from the relative flexibility of the flange and bolts, and corresponding relaxation properties.
(10) Between temperatures of –20 to 400 F, stress values equal to the lower of the following will be permitted: 20% of the specified tensile strength, or 25% of the specified yield strength.
(11) Not permitted above 450 F; allowable stress value 7000 psi.
(12) Between temperatures of 750 F to 1000 F, inclusive, the stress values for Specification SA-515, Grade 70, may be used until high temperature test data become available.
(13) The stress values to be used for temperatures below –20 F when steels are made to conform with Specification SA-300 shall be those that are given in the column for –20 to 650 F.
(14) Maximum allowable stress values for temperatures below 700 F are given in the following table:

			For Metal Temperatures Not Exceeding Deg F							
Spec	Grade	P-Number	–20 to 100	200	300	400	–20 to 400	500	600	650
SA-182	F5	5	...	...	...	...	15,000	14,500	14,000	13,700
SA-182	F5a	5	...	...	...	...	22,500	21,600	20,100	19,000
SA-182	F7	5	...	...	...	...	15,000	14,500	14,000	13,700
SA-182	F9	5	...	...	...	...	25,000	24,000	22,700	22,000
SA-182	F11	4	...	...	...	...	17,500	17,500	17,500	16,800
SA-182	F12	4	...	...	...	...	17,500	17,500	17,500	16,800
SA-182	F21	5	...	...	...	...	17,500	16,800	16,000	15,600
SA-199	T5	5	...	...	...	...	15,000	14,500	14,000	13,700
SA-199	T7	5	...	...	...	...	15,000	14,500	14,000	13,700
SA-199	T9	5	...	...	...	...	15,000	14,500	14,000	13,700
SA-213	T5	5	...	...	...	...	15,000	14,500	14,000	13,700
SA-213	T7	5	...	...	...	...	15,000	14,500	14,000	13,700
SA-213	T9	5	...	...	...	...	15,000	14,500	14,000	13,700
SA-213	T5b	5	...	...	...	...	15,000	14,500	14,000	13,700
SA-213	T5c	5	...	...	...	...	15,000	14,500	14,000	13,700
SA-335	P5	5	...	...	...	...	15,000	14,500	14,000	13,700
SA-335	P5b	5	...	...	...	...	15,000	14,500	14,000	13,700
SA-335	P5c	5	...	...	...	...	15,000	14,500	14,000	13,700
SA-335	P7	5	...	...	...	...	15,000	14,500	14,000	13,700
SA-335	P9	5	...	...	...	...	15,000	14,500	14,000	13,700
...	...	...	...	...	...	...	...	...	...	...
SA-336	F2	4	...	...	...	...	17,500	17,500	17,500	16,800
SA-336	F5	5	...	...	...	...	15,000	14,500	14,000	13,700
SA-336	F5a	5	...	...	...	...	20,000	19,200	18,000	17,300
SA-357	...	5	...	...	...	...	15,000	14,500	14,000	13,700
SA-369	FP5	5	...	...	...	...	15,000	14,500	14,000	13,700
SA-369	FP7	5	...	...	...	...	15,000	14,500	14,000	13,700
SA-369	FP9	5	...	...	...	...	15,000	14,500	14,000	13,700
SA-487	IN	10A	21,250	20,200	19,650	18,400	...	18,100	17,250	16,900
SA-487	4N	10F	22,500	21,450	21,000	21,000	...	21,000	21,000	21,000
SA-487	8N	10F	21,000	20,600	20,000	19,500	...	19,000	19,000	19,000

For the basis of selecting stress values see Appendix P.

TABLE UCS-23 (CONT'D)

(15) For temperatures below 400 F, stress values equal to 20 per cent of the specified minimum tensile strength will be permitted.
(19) These allowable stress values apply also to structural shapes and bars.
(20) Stress values apply to normalized, or normalized and tempered or oil quenched and tempered material only, as per applicable specification.
(21) Stress values apply to quenched and tempered material only, as per applicable specification.
(22) Welding not permitted when carbon content exceeds 0.35 per cent by ladle analysis except for repairs or non-pressure attachments as outlined in Part UF.
(23) Welding or brazing not permitted after quenching and tempering heat treatment of the material except for seal welding of threaded connections as permitted in Par. UF-43.
(24) Maximum allowable stress values shall be as follows:

	Normalized or Normalized and Tempered	Liquid Quenched and Tempered						
Grade	–20 to 650 F	–20 to 100	200	300	400	500	600	650
I	15,000	15,000	15,000	...	...	...	...	...
II	18,750	18,750	18,750	...	...	...	...	...
III	22,500	22,500	22,500	...	...	...	...	...
IV	26,250	26,250	25,050	24,600	24,600	24,600	24,600	24,600
V A	...	30,000	28,850	28,850	28,850	28,850	28,850	28,850
V B	...	30,000	29,050	28,500	28,250	28,200	27,800	26,750
V E	...	30,000	29,800	28,700	28,700	28,700	28,700	27,500
VC&D	...	30,000	30,000	...	...	...	...	...

(25) See Par. UCS-6(c).
(26) This material shall not be used in thicknesses above 0.58 in.
(27) Upon prolonged exposure to temperatures above about 800 F, the carbide phase of carbon steel may be converted to graphite.
(28) Upon prolonged exposure to temperatures above about 875 F, the carbide phase of carbon-molybdenum steel may be converted to graphite.
(29) The Material shall not be used in thickness above 0.375 in.

TABLE UCS-27
MAXIMUM ALLOWABLE STRESS VALUES IN TENSION FOR CARBON AND LOW-ALLOY PIPE AND TUBES OF WELDED MANUFACTURE, IN POUNDS PER SQUARE INCH
(See Par. UW-12 (c) for vessels constructed under Part UW that include welded joints that are neither fully radiographed nor spot radiographically examined)

Joint efficiencies used for preparing this table are:
Electric-Resistance Welded – 85%, Lap Welded – 80%, Butt Welded – 60%

Specification Number	Grade	P-Number	Nominal Composition	Weld	Notes	Spec Min Tensile	For Metal Temperatures Not Exceeding Deg F –20 to 650	700
SA-53	A	1	Carbon Steel	Resis.	(1)(2)	48,000	10,200	9,900
SA-53	B	1	Carbon Steel	Resis.	(1)(2)	60,000	12,750	12,200
SA-135	A	1	Carbon Steel	Resis.	(2)(3)	48,000	10,200	9,900
SA-135	B	1	Carbon Steel	Resis.	(2)(3)	60,000	12,750	12,200
SA-178	A	1	Low-Carbon Steel	Resis.	(2)(3)	...	10,000	9,700
SA-178	C	1	Medium-Carbon Steel	Resis.	(2)(3)	60,000	12,750	12,200
SA-214	...	1	Low-Carbon Steel	Resis.	(2)(3)	...	10,000	9,700
SA-226	...	1	Low-Carbon Steel	Resis.	(2)(3)	...	10,000	9,700
SA-250	T1	3	Carbon-1/2 Mo	Resis.	...	55,000	11,700	11,700
SA-250	T1a	3	Carbon-1/2 Mo	Resis.	...	60,000	12,750	12,750
SA-250	T1b	3	Carbon-1/2 Mo	Resis.	...	53,000	11,250	11,250
SA-333	1	1	Carbon Steel	Resis.	...	55,000	11,700	...
SA-333	3	9	3-1/2 Nickel	Resis.	...	65,000	13,800	...
SA-333	6	1	Carbon Steel	Resis.	...	60,000	12,750	...
SA-333	7	9A	2-1/2 Nickel	Resis.	...	65,000	13,900	...
SA-334	0	1	Carbon Steel	Resis.	...	55,000	11,700	...
SA-334	3	9	3-1/2 Nickel	Resis.	...	65,000	13,800	...
SA-334	6	1	Carbon Steel	Resis.	...	60,000	12,750	...
SA-334	7	9A	2-1/2 Nickel	Resis.	...	65,000	13,900	...
SA-423	1	4	3/4 Cr-1/2 Ni-0.4 Cu	Elect.	...	60,000	12,750	...
SA-423	2	4	3/4 Ni-0.6 Cu-0.1 Mo	Elect.	...	60,000	12,750	...

NOTES: The stress values in this table may be interpolated to determine values for intermediate temperatures.
(1) These stress values permitted for open-hearth, basic oxygen or electric-furnace steels only.
(2) For service temperatures above 850 F it is recommended that killed steels containing not less than 0.10% residual silicon be used. Killed steels which have been deoxidized with large amounts of aluminum and rimmed steels may have creep and stress-rupture properties in the temperature range above 850 F, which are somewhat less than those on which the values in the above table are based.
(3) Only killed steel shall be used above 850 F.

TABLE UCS-27
MAXIMUM ALLOWABLE STRESS VALUES IN TENSION FOR CARBON AND LOW-ALLOY PIPE AND TUBES OF WELDED MANUFACTURE, IN POUNDS PER SQUARE INCH
(See Par. UW-12 (c) for vessels constructed under Part UW that include welded joints that are neither fully radiographed nor spot radiographically examined)

Joint efficiencies used for preparing this table are:
Electric-Resistance Welded – 85%, Lap Welded – 80%, Butt Welded – 60%

For Metal Temperatures Not Exceeding Deg F						Specification Number	Grade
750	800	850	900	950	1000		
9,100	7,900	6,700	5,500	...	...	SA-53	A
11,000	9,200	7,350	5,500	...	...	SA-53	B
9,100	7,900	6,700	5,500	...	...	SA-135	A
11,000	9,200	7,350	5,500	...	...	SA-135	B
8,950	7,800	6,650	5,500	3,800	2,100	SA-178	A
11,000	9,200	7,350	5,500	3,800	2,100	SA-178	C
8,950	7,800	6,650	5,500	3,800	2,100	SA-214	...
8,950	7,800	6,650	5,500	3,800	2,100	SA-226	...
11,700	11,450	11,200	10,650	8,500	5,300	SA-250	T1
12,750	12,250	11,700	10,650	8,500	5,300	SA-250	T1a
11,250	11,050	10,850	10,650	8,500	5,300	SA-250	T1b
...	...	...	...	...	...	SA-333	1
...	...	...	...	...	...	SA-333	3
...	...	...	...	...	...	SA-333	6
...	...	...	...	...	...	SA-333	7
...	...	...	...	...	...	SA-334	0
...	...	...	...	...	...	SA-334	3
...	...	...	...	...	...	SA-334	6
...	...	...	...	...	...	SA-334	7
...	...	...	...	...	...	SA-423	1
...	...	...	...	...	...	SA-423	2

DESIGN

UCS-16 General

(a) The rules in the following paragraphs apply specifically to the design of pressure vessels and vessel parts that are constructed of carbon and low-alloy steel and shall be used in conjunction with the general requirements for *Design* in Subsection A, and with the specific requirements for *Design* in Subsection B that pertain to the method of fabrication used.

(b) *Minimum Thickness of Plate* The thickness, after forming and without allowance for corrosion, of any plate subject to pressure shall be not less than $\frac{3}{32}$ in. for welded or brazed construction, and not less than $\frac{1}{16}$ in. for riveted construction, except that the thickness of unfired steam boilers shall be not less than ¼ inch (see Par. U-1(e), UG-25(a), and UCS-25).

UCS-18 Lap Joints in Riveted Vessels

Lap and single buttstrap type joints of the types covered in Par. UR-18(a) and (b) shall not be used in carbon and low-alloy steel at design metal temperatures exceeding 450 F.

UCS-19 Welded Joints

When radiographic examination is required for butt-welded joints by Par. UCS-57, joints of Categories A and B (see Par. UW-3) shall be of Type No. (1) or No. (2) of Table UW-12.

UCS-23 Maximum Allowable Stress Values

Table UCS-23 gives the maximum allowable stress values at the temperature indicated for materials conforming to the specifications listed therein.[1] Values may be interpolated for intermediate temperatures. (See Par. UG-23.)

UCS-25 Corrosion Allowance

Vessels with a required minimum thickness of less than ¼ in. that are to be used in compressed-air service, steam service, or water service shall be provided with a corrosion allowance on the metal surface in contact with such substance of not less than ⅛ of the calculated plate thickness. This requirement does not apply to vessels designed in accordance with Par. UW-12(c). No applied linings except as provided by Part UCL shall be acceptable in lieu of the above requirement.

[1] See Appendix P for the basis on which the allowable stress values have been established for steels.

UCS-27 Shells Made from Pipe

(a) Shells of pressure vessels may be made from seamless pipe or tubing listed in Table UCS-23 provided the material of the pipe is manufactured by the open-hearth, basic oxygen or electric-furnace process.

(b) Shells of pressure vessels may be made from welded pipe or tubing listed in Table UCS-27 in nominal diameters up to 30 in. provided the material is manufactured by the open-hearth, basic oxygen or electric-furnace process (see Par. UG-16(d)). The applicable stress values given in Table UCS-27 shall be used instead of the factor *SE* in the formulas of Par. UG-27. No increase in the stress values given in Table UCS-27 shall be allowed for the performance of postweld heat treatment or radiographing.

UCS-28 Thickness of Shells Under External Pressure

(a) Cylindrical and spherical shells under external pressure shall be designed by the rules in Par. UG-28, using Fig. UCS-28.1 or Fig. UCS-28.2.

(b) Examples illustrating the use of the charts in Figs. UCS-28.1 and UCS-28.2 are given in Appendix L.

(c) Corrugated shells subject to external pressure may be used in unfired pressure vessels in accordance with Par. P-243 of Section I of the Code.

UCS-29 Stiffening Rings for Shells Under External Pressure

Rules covering the design of stiffening rings are given in Par. UG-29. An example illustrating the use of these rules is given in Appendix L.

UCS-30 Attachment of Stiffening Rings to Shell

Rules covering the attachment of stiffening rings are given in Par. UG-30.

UCS-33 Formed Heads, Pressure on Convex Side

Ellipsoidal, torispherical, hemispherical, and conical heads having pressure on the convex side (minus heads) shall be designed by the rules of Par. UG-33, using Fig. UCS-28.1 or Fig. UCS-28.2. Examples illustrating the application of this paragraph are given in Appendix L.

UCS-56 Requirements for Postweld Heat Treatment

(a) Before applying the detailed requirements and exemptions in these paragraphs, satisfactory weld procedure qualifications of the procedures to be used shall be performed in accordance with all the essential variables of Section IX of the Code including conditions of postweld heat treatment or lack of postweld heat treatment and including other restrictions listed below.

Except as otherwise specifically provided in the notes to Table UCS-56 all welded pressure vessels or pressure vessel parts shall be given a postweld heat treatment at a temperature not less than specified in Table UCS-56 when the nominal thickness, including corrosion allowance, of any welded joint in the vessel or vessel part exceeds the limits in the notes to Table UCS-56.

The materials in Table UCS-56 are listed in accordance with Section IX P-Number material groupings of Table Q-11.1 and also listed in Tables UCS-23 and UCS-27.

(b) Except for materials covered by notes (8) and (9) of Table UCS-56, holding temperatures and/or holding times in excess of the minimum values given in Table UCS-56 may be used. Intermediate postweld heat treatments need not conform to the requirements of Table UCS-56.

(c) When pressure parts of two different P-Number groups are joined by welding, the postweld heat treatment shall be that specified in Table UCS-56 with applicable notes for the material requiring the higher postweld temperature. When nonpressure parts are welded to pressure parts, the postweld heat treatment temperature of the pressure part shall control.

(d) When the welded joint connects parts that are of different thickness, the thickness to be used in applying the requirements for postweld heat treatment in (a) shall be the following:

(1) The thinner of two adjacent butt-welded plates including head to shell connections;

(2) The thicker of the shell or head plate in connections to intermediate heads of the type shown in Fig. UW-13.1(f);

(3) The thickness of the shell in connections to tube sheets, flat heads, covers, or similar constructions;

(4) The thickness of the shell or head plate in nozzle attachment welds;

(5) The thickness of the nozzle neck at the joint in nozzle neck to flange connections;

(6) The thickness of the pressure part, at the point of attachment, where a nonpressure part is welded to a pressure part.

(e) The operation of postweld heat treatment shall be carried out by one of the procedures given in Par. UW-40 in accordance with the following requirements:

(1) The temperature of the furnace shall not exceed 600 F at the time the vessel or part is placed in it;

(2) Above 600 F, the rate[1] of heating shall be not more than 400 F per hour divided by the maximum metal thickness of the shell or head plate in inches, but in no case more than 400 F per hour. During the heating period there shall not be a greater variation in temperature throughout the portion of the vessel being heated than 250 F within any 15 ft interval of length;

(3) The vessel or vessel part shall be held at or above the temperature specified in Table UCS-56 for the period of time specified in the Table. During the holding period there shall not be a greater difference than 150 F between the highest and lowest temperature throughout the portion of the vessel being heated, except that for P-9 and P-10 materials the temperature shall be maintained within the range given in the notes to Table UCS-56;

(4) During the heating and holding periods, the furnace atmosphere shall be so controlled as to avoid excessive oxidation of the surface of the vessel. The furnace shall be of such design as to prevent direct impingement of the flame on the vessel;

(5) Above 600 F, cooling shall be done in a closed furnace or cooling chamber at a rate[1] not

TABLE UCS-56
POSTWELD HEAT TREATMENT REQUIREMENTS FOR CARBON AND LOW ALLOY STEELS

Material	Notes	Minimum Holding Temperature F	Minimum Holding Time at Temperature, Hours Per Inch of Thickness (Note 2)
P-1	(1)(3)	1100	1
P-2	(1)(4)	1100	1
P-3	(1)(5)	1100	1
P-4	(6)	1100	1
P-5	(7)	1250	1
P-9A	(6)	1100	1
P-9B	(8)	1150	1
P-9C	(8)	1150	1
P-10A	(1)(5)	1100	1
P-10B	(6)	1100	1
P-12B	Sub 1	1,5,9	1100	1

[1] The rates of heating and cooling need not be less than 100 F per hour. However, in all cases consideration of closed chambers and complex structures may indicate reduced rates of heating and cooling to avoid structural damage due to excessive thermal gradients.

NOTES TO TABLE UCS-56

(1) When it is impractical to postweld heat treat at the temperature specified in this table, it is permissible to carry out the postweld heat treatment at lower temperatures for longer periods of time in accordance with the following tabulation:

Decrease in Temperature below minimum Specified Temperature Degrees F	Minimum Holding Time at Decreased Temperature Hours per Inch of Thickness
50	2
100	3
150	5
200	10

(2) The minimum holding time at temperature for material under ¼ in. in thickness shall be ¼ hour.

(3) Postweld heat treatment of P-1 materials is not mandatory under the following conditions:

(a) For material up to and including 1½ in. thickness, provided that material over 1¼ in. thickness is preheated to a minimum temperature of 200 F during welding and provided postweld heat treatment is not required as a service requirement as set forth in Pars. UCS-67 and UW-2.

(b) For material over 1½ in. thickness and for material of any thickness when the vessel requires postweld heat treatment in Par. UCS-67 or UW-2, all welded connections and attachments shall be postweld heat treated except that:

(1) Postweld heat treatment is not mandatory for fillet welds and groove welds of not over ½ in. in size that attach nozzle connections that have a finished inside diameter not greater than 2 in. provided the connections do not form ligaments that require an increase in shell or head thickness, and preheat to a minimum temperature of 200 F is applied.

(2) Postweld heat treatment is not mandatory for fillet welds having a throat thickness of ½ in. or less used for attaching nonpressure parts to pressure parts, and preheat to a minimum temperature of 200 F is applied when the thickness of the pressure part exceeds ¾ in.

(4) Postweld heat treatment of P-2 materials is not mandatory for material having a thickness at the joint of ¾ in. or less and provided postweld heat treatment is not required as a service requirement as set forth in Pars. UCS-67 and UW-2.

(5) Postweld heat treatment of P-3, P-10A and P-12B Materials except for SA-302 and SA-533 materials, is not mandatory under the following conditions: (Postweld heat treatment is mandatory for SA-302 and SA-533 material for all thicknesses.)

(a) For material up to and including 5/8 in. in thickness provided a welding procedure qualification described in Par. UCS-56(a) has been made in equal or greater thickness than the production weld and provided postweld heat treatment is not required as a service requirement as set forth in Pars. UCS-67 and UW-2.

(b) For material over 5/8 in. thickness and for material of any thickness when the vessel requires postweld heat treatment in Par. UCS-67 or UW-2, all welded connections and attachments shall be postweld heat treated except that

(1) Postweld heat treatment is not mandatory for attaching to pressure parts which have a specified maximum carbon content[1] of not more than 0.25 per cent nonpressure parts with fillet welds that have a throat thickness of ½ in. or less, providing preheat to a minimum temperature of 200 F is applied.

(2) Postweld heat treatment is not mandatory for circumferential welds in pipe or tubes where the pipe or tubes have both a nominal wall thickness of ½ in. or less and a specified maximum carbon content[1] of not more than 0.25 per cent.

(6) Postweld heat treatment of P-4, P-9A and P-10B materials is not mandatory under the following conditions:

(a) For materials of Specification SA-202, SA-203, Grades A and B and SA-352, Grade LC2, up to and including 5/8 in. in thickness provided a welding procedure qualification described in Par. UCS-56(a) has been made in equal or greater thickness than the production weld and provided postweld heat treatment is not required as a service requirement as set forth in Pars. UCS-67 and UW-2.

(b) For circumferential butt welds in pipe or tubes of P-4 materials where the pipe or tubes comply with all of the following conditions:

(1) A maximum nominal outside diameter of 4 in.

(2) A maximum thickness of ½ in.

(3) A maximum specified carbon content[1] of not more than 0.15 per cent.

(4) A minimum preheat of 250 F.

(c) For P-4 pipe or tube materials, meeting the requirements of (6) (b) (1), (2) and (3) having attachments nonpressure fillet welded to them provided:

(1) The fillet welds have a maximum throat thickness of ½ in.

(2) A minimum preheat temperature of 250 F is applied.

(7) Postweld heat treatment of P-5 materials is not mandatory under the following conditions:

(a) For circumferential butt welds in pipe or tubes of P-5 materials where the pipe or tubes comply with all of the following conditions:

(1) A maximum specified chromium content of 3.00 per cent.

(2) A maximum nominal outside diameter of 4 inches.

(3) A maximum thickness of ½ in.

(4) A maximum specified carbon content[1] of not more than 0.15 per cent.

(5) A minimum preheat of 300 F.

(b) For pipe or tube materials meeting the requirements of (7)(a) (1), (2), (3), and (4) having attachments nonpressure fillet welded to them provided,

(1) The fillet welds have a maximum throat thickness of ½ in.

(2) A minimum preheat temperature of 300 F is applied.

(8) (a) For postweld heat treatment of P-9 materials, the holding temperature shall not exceed 1250 F.

(b) Postweld heat treatment of P-9 materials is not mandatory for materials up to and including 5/8 in. in thickness provided a welding procedure qualification described in Par. UCS-56(a) has been made in equal or greater thickness than the production weld and provided postweld heat treatment is not required as a service requirement as set forth in Pars. UCS-67 and UW-2.

(9) Consideration shall be given to the limitation of interpass temperature for various thicknesses to avoid detrimental effects on the mechanical properties of heat treated materials.

[1] SA-Material Specification carbon content, except when further limited by the purchaser to a value within the Specification limits.

greater than 500 F per hour divided by the maximum metal thickness of the shell or head plate in inches, but in no case more than 500 F per hour. From 600 F the vessel may be cooled in still air.

(f) Vessels or parts of vessels that have been postweld heat treated in accordance with the requirements of this paragraph shall again be postweld heat treated after repairs or alterations have been made if the welds made in such repairs or alterations require postweld treatment under the requirements given in (a).

UCS-57 Radiographic Examination

In addition to the requirements of Par. UW-11, complete radiographic examination is required for each butt-welded joint at which the thinner of the plate or vessel wall thicknesses at the welded joint exceeds the thickness limit above which full radiography is required in Table UCS-57.

TABLE UCS-57
THICKNESS ABOVE WHICH FULL RADIOGRAPHIC EXAMINATION OF BUTT-WELDED JOINTS IS MANDATORY

P-Number Classification of Material	Nominal Thickness Above Which Butt-Welded Joints Shall be Fully Radiographed
1	1¼ in.
3	¾ in.
4	5/8 in.
5	0 in.
9A	5/8 in.
9B	5/8 in.
9C	5/8 in.
10A	¾ in.
10B	5/8 in.
12A	
Subgroup 1	1¼ in.
12B	
Subgroup 1	¾ in.
Subgroup 2	1¼ in.
Subgroup 3	5/8 in.
Subgroup 4	0 in.
12C	
Subgroup 1	5/8 in.

LOW-TEMPERATURE OPERATION

UCS-65 Scope

The following paragraphs contain mandatory requirements for vessels and vessel parts constructed of carbon and low-alloy steels that are to be used at operating temperatures below –20 F. Many of the materials acceptable for service at normal temperatures suffer such a decrease in impact resistance at subzero temperatures as to be unable safely to resist shock loading, sudden changes of stress, or high stress concentrations.

UCS-66 Materials

(a) Materials used in the construction of vessels to operate below –20 F shall conform to the specifications given in Table UCS-23 and to the requirements of this paragraph and of Par. UCS-67. (See Par. UG-84(a).)

(b) Vessels intended for service at temperatures below –20 F shall not be constructed of materials complying with Specifications SA-7, SA-36, SA-113 or SA-283.

(c) All materials shall meet the impact test requirements of Par. UG-84 unless exempted as follows:

(1) No impact test is required on any material for use at temperatures of –20 F and above, or for use below that temperature when due to a lower seasonal atmospheric temperature;

(2) No impact test is required for materials used in fabricating a vessel for metal temperatures below minus 20 F when the minimum thickness is the greater of those determined under the most severe condition of coincident pressure (external or internal) and temperature in accordance with Par. UG-21 for temperatures of: (a) minus 20 F and above, and (b) below minus 20 F in which case the coincident pressure (internal if above atmospheric and external if below atmospheric) shall be multiplied by two and one half;

(3) No impact test is required on rivets, nuts, or material less than 0.098 in. thick or on material added around openings that do not require reinforcement in accordance with Par. UG-36(c)(3).

(d) For certification by the manufacturer of materials as provided in Par. UG-84, all materials shall be given an appropriate normalizing heat-treatment. If welded, the deposited weld metal and the heat-affected zone shall also meet the impact test requirements of Par. UG-84.

(e) The material manufacturer's identification marking required by the material specification shall not be die-stamped on plate material less than ¼ in. in thickness.

UCS-67 Design

(a) In addition to the requirements of this paragraph, vessels that are to operate at temperatures of below –20 F shall conform to the design and construction rules of this Division that are applicable to the type of fabrication used.

(b) When impact tests in accordance with Par. UG-84 are required for the material or weld metal, the welded joints shall meet the requirements of Par. UW-2(b)

(c) Vessels of welded construction shall be postweld heat treated in accordance with the provisions of Par. UW-40, unless the vessels are in a classification exempted from the impact tests by Par. UCS-66(c). Exempted vessels shall comply with the postweld heat treatment requirements of Pars. UW-10 and UCS-56.

(d) The allowable stress values to be used in design shall not exceed those given in Table UCS-23 for temperatures of –20 F to 650 F.

FABRICATION

UCS-75 General

The rules in the following paragraphs apply specifically to the fabrication of unfired pressure vessels and vessel parts that are constructed of carbon and low-alloy steel and shall be used in conjunction with the general requirements for *Fabrication* in Subsection A, and with the specific requirements for *Fabrication* in Subsection B that pertain to the method of fabrication used.

UCS-79 Forming Shell Sections and Heads

(a) The following provisions shall apply in addition to the general rules for forming given in Par. UG-79.

(b) Carbon and low-alloy steel plates shall not be formed cold by blows.

(c) Carbon and low-alloy steel plates may be formed by blows at a forging temperature provided the blows do not objectionably deform the plate and it is subsequently postweld heat treated.

UCS-85 Heat Treatment

(a) The following provisions shall apply in addition to, or as exceptions to the general rules for heat treatment given in UG-85.

(b) The material used in the vessel shall be represented by test specimens which have been subjected to the same manner of heat treatment. The kind and number of tests and test results shall be as required by the material specification. The vessel manufacturer shall specify the temperature, time and cooling rates to which the material will be subjected during fabrication. Material from which the specimens are prepared shall be heated at the specified temperature within reasonable tolerances such as are normal in actual fabrication. The total time at temperature shall be at least 80 percent of the total time at temperature during actual heat treatment of the product, and may be performed in a single cycle.

(c) Heat treatment of material is not intended to include such local heating as flame or arc cutting, preheating, welding, local postweld heat treatment or heating below the critical range of tubing and pipe for bending or sizing.

(d) An exception to the requirements of UG-85 and UCS-85(b) shall apply to standard items such as described in UG-11(a). These may be subject to postweld heat treatment with the vessel or vessel part without the same treatment being required of the test specimens. This exception shall not apply to specially designed cast or wrought fittings.

(e) Materials conforming to one of the specifications listed in Classification P-1 of Table Q-11.1 of Section IX are exempt from the requirements of UCS-85(b) when the heat treatment during fabrication is limited to a postweld heat treatment.

INSPECTION AND TESTS

UCS-90 General

The provisions for inspection and testing in Subsections A and B shall apply without supplement to vessels constructed of carbon and low-alloy steels.

STAMPING AND REPORTS

UCS-115 General

The provisions for stamping and reports in Pars. UG-115 through UG-120 shall apply without supplement to pressure vessels constructed of carbon and low-alloy steels.

PRESSURE-RELIEF DEVICES

UCS-125 General

The provisions for pressure-relief devices in Pars. UG-125 through UG-134 shall apply without supplement to pressure vessels constructed of carbon and low-alloy steels.

Part UNF
Requirements for Pressure Vessels Constructed of Nonferrous Materials

GENERAL

UNF-1 Scope

The rules in Part UNF are applicable to pressure vessels and vessel parts that are constructed of nonferrous materials and shall be used in conjunction with the general requirements in Subsection A, and with the specific requirements in Subsection B that pertain to the method of fabrication used.

UNF-3 Uses

Some of the uses of nonferrous materials are to resist corrosion, to facilitate cleaning of vessels for processing foods, to provide strength or scaling-resistance at high temperatures and to provide notch toughness at low temperatures.

UNF-4 Conditions of Service

Specific chemical compositions, heat-treatment procedures, fabrication requirements, and supplementary tests may be required to assure that the vessel will be in its most favorable condition for the intended service. This is particularly true for vessels subject to severe corrosion. These rules do not indicate the selection of nonferrous material suitable for the intended service or the amount of the corrosion allowance to be provided. It is recommended that users assure themselves by appropriate tests, or otherwise, that the nonferrous material selected will be suitable for the intended service both with respect to corrosion and to retention of satisfactory mechanical properties during the desired service life, taking into account any heating or heat treatment that might be performed during fabrication.

MATERIALS

UNF-5 General

(a) All nonferrous materials subject to stress due to pressure shall conform to one of the specifications given in Section II and shall be limited to those listed in Table UNF-23 except as otherwise provided in Par. UG-10 and UG-11.

(b) Appendix NF of this Division of Section VIII and the paragraph entitled *Basis of Purchase* and the appendix of the applicable material specification contain information relative to the fabricating characteristics of the material. They are intended to help the manufacturer in ordering the correct material, and in fabricating it, and to help the producer to select the material best able to fulfill the requirements of the fabricating procedures to be used.

UNF-6 Nonferrous Plate

Approved specifications for nonferrous plates are given in Table UNF-23 together with a tabulation of allowable stress values at different temperatures (see Par. UG-6).

UNF-7 Forgings[1]

Approved specifications for nonferrous forgings are given in Table UNF-23 together with allowable stress values at different temperatures (see Par. UG-7).

UNF-8 Castings

Approved specifications for nonferrous castings are given in Table UNF-23 together with allowable stress values at different temperatures. These stress values are to be multiplied by the casting quality factors of Par. UG-24. Castings that are to be welded shall be of a weldable grade.

UNF-9 Pipe and Tubes

Approved specifications for nonferrous pipe and tubes are given in Table UNF-23 together with allowable stress values for seamless pipe and tubes. These stress values shall be multiplied by a joint efficiency factor of 0.85 to make them applicable to tubes of welded construction.

UNF-12 Bolt and Rivet Materials

(a) Approved specifications for bolt and rivet materials are given in Table UNF-23 together with allowable stress values at different temperatures.

(b) When bolts or rivets are machined from heat-treated, hot-rolled, or cold-worked material and are not subsequently hot-worked or annealed, the allowable stress values in Table UNF-23 to be used in design shall be based on the condition of the material selected.

(c) When bolts or rivets are fabricated by hot-

[1] When there is no specification for forgings in Table UNF-23 for a material which is listed, the user and the manufacturer shall agree on a specification in Table UNF-23 covering rod or bar material to be used as a guide to design information and acceptability of the material.

heading, the allowable stress values for annealed material in Table UNF-23 shall apply unless the manufacturer can furnish adequate control data to show that the tensile properties of hot-rolled bars or hot-finished forgings are being met, in which case the allowable stress values for the material in the hot finished condition may be used.

(d) When bolts or rivets are fabricated by cold-heading, the allowable stress values for annealed material in Table UNF-23 shall apply unless the manufacturer can furnish adequate control data to show that higher design stresses, as agreed upon, may be used. In no case shall such stresses exceed the allowable stress values given in Table UNF-23 for cold-worked bar stock.

(e) Ferrous bolts, studs, and nuts may be used provided they are suitable for the application. They shall conform to the requirements of Par. UCS-10 and 11.

UNF-13 Nuts and Washers

Nuts and washers may be made from any suitable material listed in Table UNF-23.

UNF-14 Rods, Bars and Shapes

Rods, bars and shapes shall conform to one of the specifications in Table UNF-23.

UNF-15 Other Materials

(a) Other materials, either ferrous or nonferrous, may be used for parts of vessels provided that they are suitable for the purpose intended.

(b) The user shall satisfy himself that the coupling of dissimilar metals will have no harmful effect on the corrosion rate or service life of the vessel for the service intended.

(c) Other materials used in conjunction with nonferrous metals shall meet the requirements given for those materials in other parts of this Division.

DESIGN

UNF-16 General

(a) The rules in the following paragraphs apply specifically to the design of pressure vessels and vessel parts of nonferrous materials and shall be used in conjunction with the general requirements for *Design* in Subsection A, and with the specific requirements for *Design* in Subsection B that pertain to the method of fabrication used.

(b) *Minimum Thickness of Plate* The minimum thickness after forming of any plate subject to pressure shall be not less than $\frac{1}{16}$ in. for welded construction in non-corrosive service, $\frac{3}{32}$ in. for welded construction in corrosive service, and $\frac{3}{16}$ in. for riveted construction. There is no specified minimum thickness requirement for brazed construction except that the thickness used must meet the brazing qualification requirements of Section IX, Part C.

UNF-18 Lap Joints in Riveted Vessels

Lap joints of the types covered in Par. UR-18 (a) shall not be used for nonferrous materials at design metal temperatures for which the allowable stress value as given in Table UNF-23 is lower than the allowable stress value at 100 F.

UNF-19

(a) For vessels constructed of unalloyed titanium, all joints of categories A and B shall be of types No. (1) or No. (2) of Table UW-12.

(b) Unalloyed titanium shall not be welded to other materials.

UNF-23 Maximum Allowable Stress Values

(a) Table UNF-23 gives the maximum allowable stress values at the temperatures indicated for materials conforming to the specifications listed therein.[1] Values may be interpolated for intermediate temperatures. (See Par. UG-23.)

(b) When welding or brazing is to be done on material having increased tensile strength produced by hot or cold working, the allowable stress value for the material in the annealed condition shall be used for joint design. One-piece heads and seamless shells may be designed on the basis of the actual temper of the material.

(c) When welding or brazing is to be done on material having increased tensile strength produced by heat-treatment, the allowable stress value for the material in the annealed condition shall be used for the joint design unless the stress values for welded construction are given in the Table UNF-23 or unless the finished construction is subjected to the same heat-treatment as that which produced the temper in the "as-received" material, provided the welded joint and the base metal are similarly affected by the heat-treatment.

UNF-28 Thickness of Shells Under External Pressure

(a) Cylindrical and spherical shells under external pressure shall be designed by the rules in Par. UG-28, using the applicable figure in Appendix V.

(b) Examples illustrating the use of the charts in the figures for the design of vessels under external pressure are given in Appendix L.

[1] See Appendix Q for the basis on which the allowable stress values have been established for nonferrous materials.

UNF-30 Stiffening Rings

Rules covering the design and attachment of stiffening rings are given in Pars. UG-29-30.

UNF-33 Formed Heads, Pressure on Convex Side

Ellipsoidal, torispherical, hemispherical, and conical heads having pressure on the convex side (minus heads) shall be designed by the rules of Par. UG-33, using Figs. UNF-28.1-28.23. Examples illustrating the application of this paragraph are given in Appendix L.

UNF-56 Postweld Heat Treatment

(a) Postweld heat treatment of nonferrous materials is not normally necessary nor desirable.

(b) No postweld heat treatment shall be performed except by agreement between the user and the manufacturer. The temperature, time and method of heat treatment shall be covered by agreement.

UNF-57 Radiographic Examination

(a) Vessels or parts of vessels constructed of non-ferrous materials shall be radiographed in accordance with the requirements of Par. UW-11.

(b) In addition, for vessels constructed of unalloyed titanium, all joints of Categories A and B shall be fully radiographed in accordance with Par. UW-51.

(c) Welded butt joints in vessels constructed of materials covered by Specifications SB-333, SB-334, SB-335 and SB-336 shall be examined radiographically for their full length as prescribed in Par. UW-51 when the thinner of the plate or vessel wall thicknesses at the welded joint exceeds $\frac{3}{8}$ inch.

UNF-58 Liquid Penetrant Examination

(a) All welds, both groove and fillet, in vessels constructed of materials covered by Specifications SB-333, SB-334, SB-335, and SB-336 shall be examined for the detection of cracks by the liquid penetrant method. This examination shall be made following heat treatment if heat treatment is performed. All defects shall be removed by grinding, or grinding and filing.

(b) All joints in vessels constructed of unalloyed titanium shall be examined by the liquid penetrant method of Appendix VIII.

Unacceptable defects shall be removed only by mechanical methods.

UNF-65 Low-Temperature Operation

The materials listed in Table UNF-23, together with deposited weld metal within the range of composition for material in that table, do not undergo a marked drop in impact resistance at subzero temperature. Therefore, no additional requirements are specified for wrought aluminum alloys when they are used at temperatures down to –452 F; for copper and copper alloys, nickel and nickel alloys, and cast aluminum alloys when they are used at temperatures down to –325 F; and for unalloyed titanium used at temperatures down to –75 F. The materials listed in Table UNF-23 may be used at lower temperatures than those specified herein and for other weld metal compositions provided the user satisfies himself by suitable test results such as determinations of tensile elongation and sharp-notch tensile strength (compared to unnotched tensile strength) that the material has suitable ductility at the design temperature.

FABRICATION

UNF-75 General

The rules in the following paragraphs apply specifically to the fabrication of pressure vessels and vessel parts that are constructed of nonferrous materials and shall be used in conjunction with the general requirements for *Fabrication* in Subsection A, and with the specific requirements for *Fabrication* in Subsection B that pertain to the method of fabrication used.

UNF-77 Forming Shell Sections and Heads

(a) The following provisions shall apply in addition to the general rules for forming given in Par. UG-79.

(b) The selected thickness of material shall be such that the forming processes will not reduce the thickness of the material at any point below the minimum value required by the design computation.

(c) Relatively small local bulges and buckles may be removed from formed parts for shells and heads by hammering or by local heating and hammering. For limiting temperatures see Appendix NF.

(d) A shell section that has been formed by rolling may be brought true to round for its entire length by pressing, rolling, or hammering.

UNF-78

Welding of unalloyed titanium is to be by the gas-shielded tungsten-arc process or the gas-shielded metal-arc (consumable-electrode) process, meeting the requirements of Part B of Section IX.

INSPECTION AND TESTS

UNF-90 General

The rules in the following paragraphs apply

TABLE UNF-23
MAXIUMUM ALLOWABLE STRESS VALUES IN TENSION FOR NONFERROUS METALS, IN POUNDS PER SQUARE INCH
(See Par. UW-12(c) for vessels constructed under Part UW that include welded joints that are neither fully radiographed nor spot radiographically examined

ALUMINUM AND ALUMINUM ALLOY PRODUCTS

Specification Number	Alloy Designation	Temper	Thickness Inches Specified	Specified Tensile Strength psi Minimum	Specified Yield Strength psi Minimum	Notes	For Metal Temperatures Not Exceeding Deg F 100	150
SHEET AND PLATE								
SB-209	1060	–0	0.051-3.000	8,000	2,500	...	1,650	1,650
		–H12	0.051-2.000	11,000	9,000	(1)	2,750	2,550
		–H14	0.051-1.000	12,000	10,000	(1)	3,000	3,000
		–H112	0.250-0.499	11,000	7,000	(1)	2,750	2,400
			0.500-1.000	10,000	5,000	(1)	2,500	2,150
			1.001-3.000	9,000	4,000	(1)	2,250	1,900
SB-209	1100	–0	0.051-3.000	11,000	3,500	...	2,350	2,350
		–H12	0.051-2.000	14,000	11,000	(1)	3,500	3,400
		–H14	0.051-1.000	16,000	14,000	(1)	4,000	3,900
		–H112	0.250-0.499	13,000	7,000	(1)	3,250	3,050
			0.500-2.000	12,000	5,000	(1)	3,000	2,800
			2.001-3.000	11,000	4,000	(1)	2,650	2,600
SB-209	3003	–0	0.051-3.000	14,000	5,000	...	3,350	3,150
		–H12	0.051-2.000	17,000	12,000	(1)	4,250	4,000
		–H14	0.051-1.000	20,000	17,000	(1)	5,000	4,850
		–H112	0.250-0.499	17,000	10,000	(1)	4,250	3,800
			0.500-2.000	15,000	6,000	(1)	3,750	3,350
			2.001-3.000	14,500	6,000	(1)	3,600	3,250
SB-209	Alclad 3003	–0	0.051-0.499	13,000	4,500	...	3,000	2,900
			0.500-3.000	14,000	5,000	(9)	...	...
		–H12	0.051-0.499	16,000	11,000	(1)	4,000	3,800
			0.500-2.000	17,000	12,000	(1) (9)	...	...
		–H14	0.051-0.499	19,000	16,000	(1)	4,750	4,600
			0.500-1.000	20,000	17,000	(1) (9)	...	...
		–H112	0.250-0.499	16,000	9,000	(1)	4,000	3,600
			0.500-2.000	15,000	6,000	(1) (11)	3,400	3,000
			2.001-3.000	14,500	6,000	(1) (11)	3,250	2,900
SB-209	3004	–0	0.051-3.000	22,000	8,500	...	5,500	5,500
		–H32	0.051-2.000	28,000	21,000	(1)	7,000	7,000
		–H34	0.051-1.000	32,000	25,000	(1)	8,000	8,000
		–H112	0.250-3.000	23,000	9,000	(1)	5,750	5,750
SB-209	Alclad 3004	–0	0.051-0.499	21,000	8,000	...	5,250	5,250
			0.500-3.000	22,000	8,500	(9)	...	...
		–H32	0.051-0.499	27,000	20,000	(1)	6,800	6,800
			0.500-2.000	28,000	21,000	(1) (9)	...	...
		–H34	0.051-0.499	31,000	24,000	(1)	7,800	7,800
			0.500-1.000	32,000	25,000	(1) (9)	...	...
		–H112	0.250-0.499	22,000	8,500	(1)	5,500	5,500
			0.500-3.000	23,000	9,000	(1) (9)	...	...
SB-209	5050	–0	0.051-3.000	18,000	6,000	...	4,000	4,000
		–H32	0.051-0.249	22,000	16,000	(1)	5,500	5,500
		–H34	0.051-0.249	25,000	20,000	(1)	6,250	6,250
		–H112	0.250-3.000	20,000	8,000	(1)	5,000	5,000
SB-209	5052	–0	0.051-3.000	25,000	9,500	...	6,250	6,250
		–H32	0.051-2.000	31,000	23,000	(1)	7,750	7,750
		–H34	0.051-1.000	34,000	26,000	(1)	8,500	8,500
		–H112	0.250-0.499	28,000	16,000	(1)	7,000	7,000
			0.500-3.000	25,000	9,500	(1)	6,250	6,250
SB-209	5083	–0	0.051-1.500	40,000	18,000	(4)	10,000	10,000
			1.501-3.000	39,000	17,000	(4)	9,750	9,750
			3.001-5.000	38,000	16,000	(4)	9,500	9,500
			5.001-7.000	37,000	15,000	(4)	9,250	9,250
			7.001-8.000	36,000	14,000	(4)	9,000	9,000
		–H112	0.250-1.500	40,000	18,000	(1) (4)	10,000	10,000
			1.501-3.000	39,000	17,000	(1) (4)	9,750	9,750
		–H321	0.188-1.500	44,000	31,000	(1) (4)	11,000	10,900
			1.501-3.000	41,000	29,000	(1) (4)	10,250	10,150
		–H323	0.051-0.249	45,000	34,000	(1) (4)	11,250	11,150
		–H343	0.051-0.249	50,000	39,000	(1) (4)	12,500	12,400

TABLE UNF-23
MAXIMUM ALLOWABLE STRESS VALUES IN TENSION FOR NONFERROUS METALS, IN POUNDS PER SQUARE INCH
(See Par. UW-12(c) for vessels constructed under Part UW that include welded joints that are neither fully radiographed nor spot radiographically examined)

ALUMINUM AND ALUMINUM ALLOY PRODUCTS

For Metal Temperatures Not Exceeding Deg F 200	250	300	350	400	Specification Number	Alloy Designation	Temper
							SHEET AND PLATE
1,550	1,350	1,200	1,050	900	SB-209	1060	–0
2,350	2,100	1,900	1,600	1,400	...	...	–H12
2,900	2,700	2,350	2,000	1,600	...	...	–H14
2,150	1,900	1,650	1,400	1,200	...	...	–H112
1,950	1,700	1,500	1,300	1,100			
1,750	1,500	1,350	1,200	1,000			
2,300	2,100	1,850	1,600	1,300	SB-209	1100	–0
3,150	2,900	2,650	2,400	1,700	...	...	–H12
3,650	3,300	3,000	2,700	1,700	...	...	–H14
2,750	2,450	2,150	1,850	1,500	...	...	–H112
2,550	2,250	2,000	1,700	1,400			
2,300	2,100	1,850	1,600	1,300			
2,900	2,700	2,400	2,100	1,800	SB-209	3003	–0
3,800	3,600	3,300	3,000	2,650	...	...	–H12
4,700	4,400	4,000	3,500	3,100	...	...	–H14
3,500	3,300	2,950	2,600	2,250	...	...	–H112
3,100	2,900	2,600	2,300	1,950			
3,000	2,800	2,500	2,200	1,900			
2,700	2,500	2,200	1,950	1,700	SB-209	Alclad 3003	–0
...	...	...	...	...	...	...	
3,600	3,400	3,100	2,800	2,500	...	...	–H12
...	...	...	...	...	...	...	
4,450	4,200	3,800	3,350	2,900	...	...	–H14
...	...	...	...	...	...	...	
3,300	3,100	2,750	2,450	2,100	...	...	–H112
2,800	2,600	2,350	2,050	1,750	...	...	
2,700	2,500	2,250	2,000	1,700	...	...	
5,500	5,200	4,550	3,600	2,950	SB-209	3004	–0
7,000	6,550	5,800	5,050	3,500	...	...	–H32
8,000	7,400	6,550	5,600	3,500	...	...	–H34
5,750	5,500	4,650	3,850	3,150	...	...	–H112
5,200	5,000	4,350	3,450	2,800	SB-209	Alclad 3004	–0
...	...	...	...	...	...	...	
6,800	6,300	5,600	4,900	3,400	...	...	–H32
...	...	...	...	...	...	...	
7,700	7,200	6,300	5,400	3,400	...	...	–H34
...	...	...	...	...	...	...	
5,500	5,200	4,550	3,600	2,950	...	...	–H112
...	...	...	...	...	...	...	
4,000	4,000	4,000	3,350	2,100	SB-209	5050	–0
5,500	5,350	4,800	3,800	2,100	...	...	–H32
6,200	6,050	5,400	3,950	2,100	...	...	–H34
5,000	4,900	4,500	3,700	2,100	...	...	–H112
6,200	6,000	5,400	4,650	3,500	SB-209	5052	–0
7,650	7,100	6,400	5,600	3,500	...	...	–H32
8,400	7,700	6,900	6,100	3,500	...	...	–H34
6,950	6,700	6,050	5,200	3,500	...	...	–H112
6,200	6,000	5,400	4,650	3,500			
...	...	...	...	...	SB-209	5083	–0
...	...	...	...	...			
...	...	...	...	...			
...	...	...	...	...			
...	...	...	...	...			
...	...	...	...	...	...	...	–H112
...	...	...	...	...			
...	...	...	...	...	...	...	–H321
...	...	...	...	...			
...	...	...	...	...	...	...	–H323
...	...	...	...	...	...	...	–H343

TABLE UNF-23 (Cont'd)

MAXIMUM ALLOWABLE STRESS VALUES IN TENSION FOR NONFERROUS METALS, IN POUNDS PER SQUARE INCH

(See Par. UW-12(c) for vessels constructed under Part UW that include welded joints that are neither fully radiographed nor spot radiographically examined)

ALUMINUM AND ALUMINUM ALLOY PRODUCTS

Specification Number	Alloy Designation	Temper	Thickness Inches Specified	Specified Tensile Strength psi Minimum	Specified Yield Strength psi Minimum	Notes	For Metal Temperatures Not Exceeding Deg F 100	150
SHEET AND PLATE (Cont'd)								
SB-209	5086	–0	0.051-2.000	35,000	14,000	(4)	8,700	8,700
		–H32	0.051-2.000	40,000	28,000	(1) (4)	10,000	9,900
		–H34	0.051-1.000	44,000	34,000	(1) (4)	11,000	10,800
		–H112	0.250-0.499	36,000	18,000	(1) (4)	9,000	9,000
			0.500-1.000	35,000	16,000	(1) (4)	8,700	8,700
			1.001-2.000	35,000	14,000	(1) (4)	8,700	8,700
			2.001-3.000	34,000	14,000	(4)	8,500	8,500
SB-209	5154	–0	0.051-3.000	30,000	11,000	(4)	7,350	7,350
		–H32	0.051-2.000	36,000	26,000	(1) (4)	9,000	8,950
		–H34	0.051-1.000	39,000	29,000	(1) (4)	9,750	9,700
		–H112	0.250-0.499	32,000	18,000	(1) (4)	8,000	8,000
			0.500-3.000	30,000	11,000	(1) (4)	7,350	7,350
SB-209	5454	–0	0.051-3.000	31,000	12,000	...	7,750	7,750
		–H32	0.051-2.000	36,000	26,000	(1)	9,000	9,000
		–H34	0.051-1.000	39,000	29,000	(1)	9,750	9,750
		–H112	0.250-0.499	32,000	18,000	(1)	8,000	8,000
			0.500-3.000	31,000	12,000	(1)	7,750	7,750
SB-209	5456	–0	0.051-1.500	42,000	19,000	(4)	10,500	10,400
			1.501-3.000	41,000	18,000	(4)	10,250	10,150
			3.001-5.000	40,000	17,000	(4)	10,000	9,900
			5.001-7.000	39,000	16,000	(4)	9,750	9,650
			7.001-8.000	38,000	15,000	(4)	9,500	9,400
		–H112	0.250-1.500	42,000	19,000	(1) (4)	10,500	10,400
			1.501-3.000	41,000	18,000	(1) (4)	10,250	10,150
		–H321	0.188-1.250	46,000	33,000	(1) (4)	11,500	11,400
			1.251-1.500	44,000	31,000	(1) (4)	11,000	10,900
			1.501-3.000	41,000	29,000	(1) (4)	10,250	10,150
		–H323	0.051-0.249	48,000	36,000	(1) (4)	12,000	11,850
		–H343	0.051-0.249	53,000	41,000	(1) (4)	13,250	13,100
SB-209	6061	–T4	0.051-3.000	30,000	16,000	(2)	7,500	7,200
		–T4 Welded	0.051-3.000	24,000*	...	...	6,000	5,900
		–T6	0.051-4.000	42,000	35,000	(2)	10,500	10,200
			4.001-5.000	40,000	35,000	(2)	10,000	9,700
		–T6 Welded	0.051-5.000	24,000*	...	...	6,000	5,900
SB-209	Alclad 6061	–T4	0.051-0.499	27,000	14,000	(2)	6,800	6,500
			0.500-3.000	30,000	16,000	(2) (9)	...	...
		–T6	0.051-0.499	38,000	32,000	(2)	9,500	9,200
			0.500-4.000	42,000	35,000	(2) (9)	...	...
			4.001-5.000	40,000	35,000	(2) (11)	9,000	8,750
		–T4 Welded	0.051-3.000	24,000*	...	...	6,000	5,900
		–T6 Welded	0.051-5.000	24,000*	...	...	6,000	5,900
RODS, BARS, SHAPES AND EXTRUDED TUBE								
SB-211	2024	–T4	0.125-6.500	62,000	40,000	(2) (5)	15,500	14,800
SB-211	6061	–T6	0.125-8.000	42,000	35,000	(2) (5)	10,500	10,200
		–T6 Welded	0.125-8.000	24,000*	...	(5)	6,000	5,900

*Strength of reduced-section tensile specimen required to qualify welding procedures. See Par. QN-6.

TABLE UNF-23 (Cont'd)

MAXIMUM ALLOWABLE STRESS VALUES IN TENSION FOR NONFERROUS METALS, IN POUNDS PER SQUARE INCH

(See Par. UW-12(c) for vessels constructed under Part UW that include welded joints that are neither fully radiographed nor spot radiographically examined)

ALUMINUM AND ALUMINUM ALLOY PRODUCTS

For Metal Temperatures Not Exceeding Deg F

200	250	300	350	400	Specification Number	Alloy Designation	Temper
							SHEET AND PLATE (Cont'd)
...	...	...	...	...	SB-209	5086	–0
...	...	...	...	...	...		–H32
...	...	...	...	...	...	...	–H34
...	...	...	...	...	...	...	–H112
...	...	...	...	...			
...	...	...	...	...			
...	...	...	...	...			
7,350	7,000	6,400	...	...	SB-209	5154	–0
8,850	8,250	7,400	...	...	...		–H32
9,500	8,800	7,900	...	...	...	...	–H34
8,000	7,450	6,850	...	...	...	...	–H112
7,350	7,000	6,400	...	...			
7,700	7,200	5,500	4,300	3,500	SB-209	5454	–0
8,800	7,500	5,500	4,300	3,500	...		–H32
9,250	7,500	5,500	4,300	3,500	...	...	–H34
7,950	7,400	5,500	4,300	3,500	...	...	–H112
7,700	7,200	5,500	4,300	3,500			
...	...	...	...	...	SB-209	5456	–0
...	...	...	...	...			
...	...	...	...	...			
...	...	...	...	...			
...	...	...	...	...			
...	...	...	...	...	...	...	–H112
...	...	...	...	...			
...	...	...	...	...	...	...	–H321
...	...	...	...	...			
...	...	...	...	...			
...	...	...	...	...	...	...	–H323
...	...	...	...	...	...	...	–H343
7,000	6,700	6,400	5,600	4,000	SB-209	6061	–T4
5,700	5,400	5,000	4,200	3,200	...		–T4 Welded
9,900	9,400	7,900	6,200	4,400	...		–T6
9,450	8,950	7,500	5,900	4,200			
5,700	5,400	5,000	4,200	3,200	...	...	–T6 Welded
6,200	6,000	5,800	5,100	3,600	SB-209	Alclad 6061	–T4
...	...	...	...	...	...	...	
9,000	8,500	7,200	5,600	4,000	...	...	–T6
...	...	...	...	...	...	...	
8,500	8,050	6,750	5,300	3,800	...	...	
5,700	5,400	5,000	4,200	3,200	...	...	–T4 Welded
5,700	5,400	5,000	4,200	3,200	...	...	–T6 Welded
							RODS, BARS, SHAPES AND EXTRUDED TUBE
14,200	12,400	9,400	5,900	4,100	SB-211	2024	–T4
9,900	9,400	7,900	6,200	4,400	SB-211	6061	–T6
5,700	5,400	5,000	4,200	3,200			–T6 Welded

TABLE UNF-23 (Cont'd)

MAXIMUM ALLOWABLE STRESS VALUES IN TENSION FOR NONFERROUS METALS, IN POUNDS PER SQUARE INCH

(See Par. UW-12(c) for vessels constructed under Part UW that include welded joints that are neither fully radiographed nor spot radiographically examined)

ALUMINUM AND ALUMINUM ALLOY PRODUCTS

Specification Number	Alloy Designation	Temper	Thickness Inches Specified	Specified Tensile Strength psi Minimum	Specified Yield Strength psi Minimum	Notes	For Metal Temperatures Not Exceeding Deg F 100	150
RODS, BARS, SHAPES AND EXTRUDED TUBE (Cont'd)								
SB-221	1060 Tube	–0	All	8,500	2,500	...	1,650	1,650
		–H112	All	10,000	4,000	(1)	2,500	2,150
SB-221	2024	–T4	Up thru 0.249	57,000	42,000	(2) (5)	14,250	13,600
			0.250-0.749	60,000	44,000	(2) (5)	15,000	14,300
			0.750-1.499	65,000	46,000	(2) (5)	16,250	15,500
			1.500 and over	68,000	46,000	(2) (5) (10)	17,000	16,200
SB-221	3003	–0	All	14,000	5,000	...	3,350	3,150
		–H112	All	14,000	5,000	(1)	3,350	3,150
SB-221	Alclad 3003 Tube	–0	All	13,000	4,500	...	3,000	2,900
		–H112	All	13,000	4,500	(1)	3,000	2,900
SB-221	5083	–0	Up thru 5.000	39,000	16,000	(4)	9,750	9,750
		–H111	Up thru 5.000	40,000	24,000	(1) (4)	10,000	10,000
SB-221	5154	–0	All	30,000	11,000	(4)	7,350	7,350
		–H112	All	30,000	11,000	(1) (4)	7,350	7,350
SB-221	5454	–0	Up thru 5.000	31,000	12,000		7,750	7,750
		–H111	Up thru 5.000	33,000	19,000	(1)	8,250	8,250
		–H112	Up thru 5.000	31,000	12,000	(1)	7,750	7,750
SB-221	5456	–0	Up thru 5.000	41,000	19,000	(4)	10,250	10,150
		–H111	Up thru 5.000	42,000	26,000	(1) (4)	10,500	10,400
		–H112	Up thru 5.000	41,000	19,000	(1) (4)	10,250	10,150
SB-221	6061	–T4	All	26,000	16,000	(2) (5)	6,500	6,200
		–T6	All	38,000	35,000	(2) (5)	9,500	9,200
		–T4, –T6 Welded	All	24,000*	...	(5)	6,000	5,900
SB-221	6063	–T1	Up thru 0.500	17,000	9,000	(2)	4,200	4,200
			0.501-1.000	16,000	8,000	(2)	4,000	4,000
		–T5	Up thru 0.500	22,000	16,000	(2)	5,500	5,100
			0.501-1000	21,000	15,000	(2)	5,250	4,850
		–T6	Up thru 1.000	30,000	25,000	(2)	7,500	7,100
		–T6 Welded	Up thru 1.000	17,000*	...	...	4,250	4,200
SB-308	6061	–T6	...	38,000	35,000	(2)	9,500	9,200
		–T6 Welded	...	24,000*	...	...	6,000	5,900
BOLTING								
SB-211	2014	–T6	0.125-6.500	65,000	55,000	(2) (3) (5)	13,000	12,200
SB-211	2024	–T4	0.125-6.500	62,000	40,000	(2) (3) (5)	10,000	9,700
SB-211	6061	–T6	0.125-8.000	42,000	35,000	(2) (3) (5)	8,400	8,200
		–T6 Welded	0.125-8.000	24,000*	...	(5)	4,800	4,700
DRAWN SEAMLESS TUBE								
SB-210	1060	–0	0.010-0.500	8,500	2,500	...	1,650	1,650
		–H14	0.010-0.500	12,000	10,000	(1)	3,000	3,000
		–H112	0.010-0.500	10,000	4,000	(1)	2,500	2,150

*Strength of reduced-section tensile specimen required to qualify welding procedures. See Par. QN-6.

TABLE UNF-23 (Cont'd)

MAXIMUM ALLOWABLE STRESS VALUES IN TENSION FOR NONFERROUS METALS, IN POUNDS PER SQUARE INCH

(See Par. UW-12(c) for vessels constructed under Part UW that include welded joints that are neither fully radiographed nor spot radiographically examined)

ALUMINUM AND ALUMINUM ALLOY PRODUCTS

For Metal Temperatures Not Exceeding Deg F 200	250	300	350	400	Specification Number	Alloy Designation	Temper
					RODS, BARS, SHAPES AND EXTRUDED TUBE (Cont'd)		
1,600	1,450	1,250	1,100	900	SB-221	1060 Tube	–0
1,950	1,700	1,500	1,300	1,100	...		–H112
13,000	11,400	8,650	5,400	3,800	SB-221	2024	–T4
13,700	12,000	9,100	5,700	3,950			
14,850	13,000	9,850	6,150	4,300			
15,550	13,600	10,300	6,450	4,500			
2,900	2,700	2,400	2,100	1,800	SB-221	3003	–0
2,900	2,700	2,400	2,100	1,800	...		–H112
2,700	2,500	2,200	1,950	1,700	SB-221	Alclad 3003 Tube	–0
2,700	2,500	2,200	1,950	1,700	...		–H112
...	...	...	...	...	SB-221	5083	–0
...	...	...	...	...	...		–H111
7,350	7,000	6,400	...	...	SB-221	5154	–0
7,350	7,000	6,400	...	...	...		–H112
7,700	7,200	5,500	4,300	3,500	SB-221	5454	–0
8,200	7,500	5,500	4,300	3,500	...		–H111
7,700	7,200	5,500	4,300	3,500	...		–H112
...	...	...	...	...	SB-221	5456	–0
...	...	...	...	...	...		–H111
...	...	...	...	...	...		–H112
6,000	5,800	5,600	4,900	3,500	SB-221	6061	–T4
9,000	8,500	7,200	5,600	4,000	...		–T6
5,700	5,400	5,000	4,200	3,200	...		–T4, –T6 Welded
4,200	4,200	4,000	3,100	2,000	SB-221	6063	–T1
4,000	4,000	3,800	3,100	2,000			
4,900	4,600	4,200	3,100	2,000	SB-221		–T5
4,700	4,400	4,000	3,100	2,000			
6,800	6,100	4,500	3,100	2,000	...	...	–T6
4,000	3,800	3,600	2,750	1,900	...	...	–T6 Welded
9,000	8,500	7,200	5,600	4,000	SB-308	6061	–T6
5,700	5,400	5,000	4,200	3,200			–T6 Welded
							BOLTING
11,600	10,400	7,200	4,400	3,000	SB-211	2014	–T6
9,400	9,000	7,800	6,200	4,600	SB-211	2024	–T4
7,900	7,500	6,300	4,900	3,300	SB-211	6061	–T6
4,600	4,400	4,000	3,400	2,600			–T6 Welded
							DRAWN SEAMLESS TUBE
1,600	1,450	1,250	1,100	900	SB-210	1060	–0
2,900	2,700	2,350	2,000	1,600	...		–H14
1,950	1,700	1,500	1,300	1,100	...	...	–H112

TABLE UNF-23 (Cont'd)

MAXIMUM ALLOWABLE STRESS VALUES IN TENSION FOR NONFERROUS METALS, IN POUNDS PER SQUARE INCH

(See Par. UW-12(c) for vessels constructed under Part UW that include welded joints that are neither fully radiographed nor spot radiographically examined)

ALUMINUM AND ALUMINUM ALLOY PRODUCTS

Specification Number	Alloy Designation	Temper	Thickness Inches Specified	Specified Tensile Strength psi Minimum	Specified Yield Strength psi Minimum	Notes	For Metal Temperatures Not Exceeding Deg F 100	150
DRAWN SEAMLESS TUBE (Cont'd)								
SB-210	3003	–0	0.010-0.500	14,000	5,000	...	3,350	3,150
		–H12	0.010-0.500	17,000	12,000	(1)	4,250	4,000
		–H14	0.010-0.500	20,000	17,000	(1)	5,000	4,850
		–H18	0.010-0.500	27,000	24,000	(1)	6,750	6,400
SB-210	Alclad 3003	–0	0.010-0.500	13,000	4,500	...	3,000	2,900
		–H14	0.010-0.500	19,000	16,000	(1)	4,750	4,600
		–H18	0.010-0.500	26,000	23,000	(1)	6,500	6,100
		–H112	0.050-0.500	14,500	6,000	(1)	3,600	3,250
SB-210	5154	–0	0.010-0.450	30,000	11,000	(4)	7,350	7,350
		–H34	0.010-0.450	39,000	29,000	(1) (4)	9,750	9,700
SB-210	6061	–T4	0.025-0.500	30,000	16,000	(2)	7,500	7,200
		–T6	0.025-0.500	42,000	35,000	(2)	10,500	10,200
		–T4, –T6 Welded	0.025-0.500	24,000*	...	...	6,000	5,900
SB-210	6063	–T6	0.025-0.500	33,000	28,000	(2)	8,250	7,800
		–T6 Welded	0.025-0.500	17,000*	...	...	4,250	4,200
SEAMLESS PIPE								
SB-241	3003	–H18	Up thru 0.250	27,000	24,000	(2)(6)	6,750	6,400
		–H112	0.065 and over	14,000	6,000	(2) (7)	3,500	3,150
SB-241	5083	–0	All	39,000	16,000	(4)	9,750	9,750
SB-241	5154	–H38	Up thru 0.250	45,000	34,000	(2) (4) (6)	11,250	11,200
		–H112	0.065 and over	30,000	11,000	(2) (4) (7)	7,350	7,350
SB-241	5454	–0	Up thru 0.500	31,000	12,000	(7)	7,750	7,750
		–H112	0.065 and over	31,000	12,000	(1) (7)	7,750	7,750
SB-241	5456	–0	All	41,000	19,000	(4)	10,250	10,150
		–H112	All	41,000	19,000	(1) (4)	10,250	10,150
SB-241	6061	–T6	Up thru 0.250	42,000	35,000	(2) (6)	10,500	10,200
			0.065 and over	38,000	35,000	(2) (7)	9,500	9,200
		–T6 Welded	All	24,000*	...	...	6,000	5,900
CONDENSER AND HEAT EXCHANGER TUBE								
SB-234	1060	–H14	0.010-0.500	12,000	10,000	(2)	3,000	3,000
SB-234	3003	–H14	0.010-0.200	20,000	17,000	(2)	5,000	4,850
		–H25	0.010-0.200	22,000	19,000	(2)	5,500	5,300
SB-234	Alclad 3003	–H14	0.010-0.200	19,000	16,000	(2)	4,750	4,600
		–H25	0.010-0.200	21,000	18,000	(2)	5,250	5,050
SB-234	5052	–H32	0.010-0.200	31,000	23,000	(2)	7,750	7,750
		–H34	0.010-0.200	34,000	26,000	(2)	8,500	8,500
SB-234	5454	–H32	0.010-0.250	36,000	26,000	(2)	9,000	9,000
		–H34	0.010-0.250	39,000	29,000	(2)	9,750	9,750
SB-234	6061	–T4	0.025-0.249	30,000	16,000	(2)	7,500	7,200
		–T6	0.025-0.249	42,000	35,000	(2)	10,500	10,200
		–T4, –T6 Welded	0.025-0.249	24,000*	...	...	6,000	5,900

*Strength of reduced-section tensile specimen required to qualify welding procedures. See Par. QN-6.

TABLE UNF-23 (Cont'd)

MAXIMUM ALLOWABLE STRESS VALUES IN TENSION FOR NONFERROUS METALS, IN POUNDS PER SQUARE INCH

(See Par. UW-12(c) for vessels constructed under Part UW that include welded joints that are neither fully radiographed nor spot radiographically examined)

ALUMINUM AND ALUMINUM ALLOY PRODUCTS

For Metal Temperatures Not Exceeding Deg F 200	250	300	350	400	Specification Number	Alloy Designation	Temper
							DRAWN SEAMLESS TUBE (Cont'd)
2,900	2,700	2,400	2,100	1,800	SB-210	3003	–0
3,800	3,600	3,300	3,000	2,650	...		–H12
4,700	4,400	4,000	3,500	3,100	...	...	–H14
6,050	5,700	5,250	4,400	3,500	...	...	–H18
2,700	2,500	2,200	1,950	1,700	SB-210	Alclad 3003	–0
4,450	4,200	3,800	3,350	2,900	...		–H14
5,800	5,500	5,050	4,200	3,350	...	...	–H18
3,000	2,800	2,500	2,200	1,900	...	...	–H112
7,350	7,000	6,400	...	...	SB-210	5154	–0
9,500	8,800	7,900	...	...	...		–H34
7,000	6,700	6,400	5,600	4,000	SB-210	6061	–T4
9,900	9,400	7,900	6,200	4,400	...		–T6
5,700	5,400	5,000	4,200	3,200	...	...	–T4, –T6 Welded
7,500	6,700	4,950	3,400	2,200	SB-210	6063	–T6
4,000	3,800	3,600	2,750	1,900	...		–T6 Welded
							SEAMLESS PIPE
6,050	5,700	5,250	4,400	3,500	SB-241	3003	–H18
2,900	2,700	2,400	2,100	1,800	...		–H112
...	...	...	...	...	SB-241	5083	–0
10,900	10,200	9,100	...	...	SB-241	5154	–H38
7,350	7,000	6,400	...	...	...		–H112
7,700	7,200	5,500	4,300	3,500	SB-241	5454	–0
7,700	7,200	5,500	4,300	3,500	...		–H112
...	...	...	...	...	SB-241	5456	–0
...	...	...	...	...	...		–H112
9,900	9,400	7,900	6,200	4,400	SB-241	6061	–T6
9,000	8,500	7,200	5,600	4,000	...		
5,700	5,400	5,000	4,200	3,200	...	...	–T6 Welded
							CONDENSER AND HEAT EXCHANGER TUBE
2,900	2,700	2,350	2,000	1,600	SB-234	1060	–H14
4,700	4,400	4,000	3,500	3,100	SB-234	3003	–H14
5,100	4,800	4,350	3,800	3,200	...		–H25
4,450	4,200	3,800	3,350	2,900	SB-234	Alclad 3003	–H14
4,900	4,600	4,150	3,650	3,150	...		–H25
7,650	7,100	6,400	5,600	3,500	SB-234	5052	–H32
8,400	7,700	6,900	6,100	3,500	...		–H34
8,800	7,500	5,500	4,300	3,500	SB-234	5454	–H32
9,250	7,500	5,500	4,300	3,500	...		–H34
7,000	6,700	6,400	5,600	4,000	SB-234	6061	–T4
9,900	9,400	7,900	6,200	4,400	...		–T6
5,700	5,400	5,000	4,200	3,200	...		–T4, –T6 Welded

TABLE UNF-23 (Cont'd)

MAXIMUM ALLOWABLE STRESS VALUES IN TENSION FOR NONFERROUS METALS, IN POUNDS PER SQUARE INCH

(See Par. UW-12(c) for vessels constructed under Part UW that include welded joints that are neither fully radiographed nor spot radiographically examined)

ALUMINUM AND ALUMINUM ALLOY PRODUCTS

Specification Number	Alloy Designation	Temper	Thickness Inches Specified	Specified Tensile Strength psi Minimum	Specified Yield Strength psi Minimum	Notes	For Metal Temperatures Not Exceeding Deg F 100	150
DIE AND HAND FORGINGS								
SB-247	2014 Die	–T4	Up thru 4.000	55,000	30,000	(2)	13,800	12,800
		–T6	Up thru 4.000	65,000	55,000	(2)	16,200	15,200
SB-247	3003 Die	–H112	All	14,000	5,000	...	3,350	3,150
SB-247	5083	–0 Die & Hand	Up thru 4.000	38,000	16,000	(4)	9,500	9,500
		–H112 Hand	Up thru 4.000	39,000	16,000	(1)(4)	9,750	9,750
SB-247	5456	–0 Die	Up thru 4.000	40,000	18,000	(4)	10,000	9,900
		–0 Hand	Up thru 4.000	40,000	17,000	(4)	10,000	9,900
		–H112 Hand	Up thru 4.000	42,000	18,000	(1)(4)	10,500	10,400
SB-247	6053 Die	–T6	Up thru 4.000	36,000	30,000	(2)	9,000	8,400
SB-247	6061	–T-6	Up thru 4.000	38,000	35,000	(2)	9,500	9,200
		–T-6 Welded	Up thru 4.000	24,000*	...	...	6,000	5,900
		–T6 Hand	Up thru 4.000	37,000	33,000	(2)	9,250	9,000
			4.001 thru 8.000	35,000	32,000	(2)	8,750	8,500
CASTINGS						(8)		
SB-26	S5A	F	...	17,000	6,000	(2)	4,000	4,000
	SG70A	–T6	...	30,000	20,000	(2)	7,500	7,400
		–T71	...	25,000	18,000	(2)	6,250	6,000

*Strength of reduced-section tensile specimen required to qualify welding procedures. See Par. QN-6.

NOTES: (a) The stress values in this table may be interpolated to determine values for intermediate temperature.
(b) Stress values in restricted shear such as dowel bolts, rivets, or similar construction in which the shearing member is so restricted that the section under consideration would fail without reduction of area shall be 0.80 times the values in the above table.
(c) Stress values in bearing shall be 1.60 times the values in the above table.

(1) For welded construction, stress values for –0 material shall be used.
(2) The stress values given for this material are not applicable when either welding or thermal cutting is employed.
(3) See Par. UNF-12 and UNF-23.
(4) See Par. NF-13(b).
(5) For stress-relieved tempers (T351, T3510, T3511, T451, T4510, T4511, T651, T6510, T6511), stress values for material in the basic temper shall be used.
(6) Standard pipe sizes less than one inch.
(7) Standard pipe sizes one inch and greater.
(8) To these stress values a quality factor as specified in Par. UG-24 shall be applied for castings.
(9) The tension test specimen from 0.500 in. and thicker is machined from the core and does not include the cladding alloy, therefore the allowable stress values for the thicknesses less than 0.500 in. shall be used.
(10) The minimum specified yield strength is for tube; for other shapes the minimum specified yield strength is 48,000 psi.
(11) The tension test specimen from plate 0.500 in. and thicker is machined from the core and does not include the cladding alloy, therefore the allowable stress value shown are 90 per cent of those for the core material.

TABLE UNF-23 (Cont'd)

MAXIMUM ALLOWABLE STRESS VALUES IN TENSION FOR NONFERROUS METALS, IN POUNDS PER SQUARE INCH

(See Par. UW-12(c) for vessels constructed under Part UW that include welded joints that are neither fully radiographed nor spot radiographically examined)

ALUMINUM AND ALUMINUM ALLOY PRODUCTS

For Metal Temperatures Not Exceeding Deg F 200	250	300	350	400	Specification Number	Alloy Designation	Temper
							DIE AND HAND FORGINGS
12,000	11,000	10,200	5,750	3,900	SB-247	2014 Die	–T4
14,400	14,000	11,300	5,750	3,900			–T6
2,900	2,700	2,400	2,100	1,800	SB-247	3003 Die	–H112
...	...	...	...	...	SB-247	5083	–0 Die & Hand
...	...	...	...	...			–H112 Hand
...	...	...	...	...	SB-247	5456	–0 Die
...	...	...	...	...	...	...	–0 Hand
...	...	...	...	...	...	...	–H112 Hand
7,900	7,300	6,100	4,700	3,200	SB-247	6053 Die	–T6
9,000	8,500	7,200	5,600	4,000	SB-247	6061	–T6 Die
5,700	5,400	5,000	4,200	3,200	...		–T6 Welded
8,750	8,250	7,200	5,600	4,000	...		–T6 Hand
8,250	7,800	7,200	5,600	4,000	...		
							CASTINGS
3,700	3,400	3,100	2,850	2,550	SB-26	S5A	F
6,900	5,700	...	...	...	...	SG70A	–T6
5,750	5,500	4,950	3,750	2,600	...	...	–T71

TABLE UNF-23 (CONT'D)
MAXIMUM ALLOWABLE STRESS VALUES IN TENSION FOR NONFERROUS METALS, IN POUNDS PER SQUARE INCH
(See Par. UW-12(c) for vessels constructed under Part UW that include welded joints that are neither fully radiographed nor spot radiographically examined)

COPPER AND COPPER ALLOYS

Material and Specification Number		Condition	Size, In.	Specified Minimum Tensile Strength, psi	Yield Strength, psi	For Metal Temperatures Not Exceeding Deg F 100	150
Copper							
SB-11	Plates	Annealed	...	30,000	10,000	6,700	6,700
SB-12	Rods	Annealed	...	30,000	10,000	6,700	6,700
SB-42	Pipe	Annealed	...	30,000*	9,000*	6,000	6,000
SB-42	Pipe	Drawn	⅛ to 2, incl.	45,000	40,000	11,300	11,300
SB-42	Pipe	Drawn	2½ to 12, incl.	36,000	30,000	9,000	9,000
SB-75	Seamless Tubes	Annealed	...	30,000	9,000	6,000	6,000
SB-75	Seamless Tubes	Light Drawn	...	36,000	30,000	9,000	9,000
SB-75	Seamless Tubes	Hard Drawn	...	45,000	40,000	11,300	11,300
SB-111	Seamless Condenser Tubes	Light Drawn	...	36,000	30,000	9,000	9,000
SB-111	Seamless Condenser Tubes	Hard Drawn	...	45,000	40,000	11,300	11,300
SB-152	Plate, Sheet, Strip, and Bar	Annealed Phosphorus-Deoxidized	...	30,000	10,000*	6,700	6,700
SB-395	U-Bend Seamless Tubes	Light Drawn	...	36,000	3,000	9,000	9,000
Red Brass							
B-43	Pipe	Annealed	...	40,000	12,000	8,000	8,000
SB-111	Seamless Condenser Tubes	Annealed	...	40,000	12,000	8,000	8,000
SB-395	U-Bend Seamless Tubes	Annealed	...	40,000	12,000	8,000	8,000
Admiralty A, B, C, D							
SB-111	Seamless Condenser Tubes	Annealed	...	45,000	15,000	10,000	10,000
SB-171	Tube Plates	Annealed	...	45,000	15,000	10,000	10,000
SB-395	U-Bend Seamless Tubes	Annealed	...	45,000	15,000	10,000	10,000
Aluminum Brass B, C, D							
SB-111	Seamless Condenser Tubes	Annealed	...	50,000	18,000	12,000	12,000
SB-395	U-Bend Seamless Tubes	Annealed	...	50,000	18,000	12,000	12,000
Naval Brass							
SB-171	Tube Plates	Annealed	3 and under	50,000	20,000	12,500	12,500
		Annealed	Over 3 to 5, incl.	50,000	18,000	12,000	12,000
Muntz Metal							
SB-111	Seamless Condenser Tubes	Annealed	...	50,000	20,000	12,500	12,500
Leaded Muntz Metal							
SB-171	Tube Plates	Annealed	2 and under	50,000	20,000	12,500	12,500
		Annealed	Over 2 to 3.5, incl.	45,000	15,000	10,000	10,000
		Annealed	Over 3.5 to 5, incl.	40,000	12,000	8,000	8,000
Copper-Nickel, 60–40							
SB-111	Seamless Condenser Tubes	Annealed	2 and under	64,000	28,000	15,800	15,200

*Expected value, not included in specifications.

TABLE UNF-23 (CONT'D)
MAXIMUM ALLOWABLE STRESS VALUES IN TENSION FOR NONFERROUS METALS, IN POUNDS PER SQUARE INCH
(See Par. UW-12(c) for vessels constructed under Part UW that include welded joints that are neither fully radiographed nor spot radiographically examined)

COPPER AND COPPER ALLOYS

For Metal Temperatures Not Exceeding Deg F														
200	250	300	350	400	450	500	550	600	650	700	750	800		
													Copper	
6,500	6,300	5,000	3,800	2,500	...	...	...	...	...	...	...	...		SB-11
6,500	6,300	5,000	3,800	2,500	...	...	...	...	...	...	...	...		SB-12
5,900	5,800	5,000	3,800	2,500	...	...	...	...	...	...	...	...		SB-42
11,000	10,500	8,000	5,000	2,500	...	...	...	...	...	...	...	...		SB-42
8,700	8,300	8,000	5,000	2,500	...	...	...	...	...	...	...	...		SB-42
5,900	5,800	5,000	3,800	2,500	...	...	...	...	...	...	...	...		SB-75
8,700	8,300	8,000	5,000	2,500	...	...	...	...	...	...	...	...		SB-75
11,000	10,500	8,000	5,000	2,500	...	...	...	...	...	...	...	...		SB-75
8,700	8,300	8,000	5,000	2,500	...	...	...	...	...	...	...	...		SB-111
11,000	10,500	8,000	5,000	2,500	...	...	...	...	...	...	...	...		SB-111
6,500	6,300	5,000	3,800	2,500	...	...	...	...	...	...	...	...		SB-152
8,700	8,300	8,000	5,000	2,500	...	...	...	...	...	...	...	...		SB-395
													Red Brass	
8,000	8,000	8,000	6,000	3,000	2,000	...	...	...	...	...	...			SB-43
8,000	8,000	8,000	6,000	3,000	2,000	...	...	...	...	...	...	...		SB-111
8,000	8,000	8,000	6,000	3,000	2,000	...	...	...	...	...	...	...		SB-395
													Admiralty A, B, C, D	
10,000	10,000	10,000	8,000	5,000	3,000	...	...	...	...	...	...	...		SB-111
10,000	10,000	10,000	8,000	5,000	3,000	...	...	...	...	...	...	...		SB-171
10,000	10,000	10,000	8,000	5,000	3,000	...	...	...	...	...	...	...		SB-395
													Aluminum Brass B, C, D	
12,000	12,000	12,000	7,500	3,000	2,000	...	...	...	...	...	...	...		SB-111
12,000	12,000	12,000	7,500	3,000	2,000	...	...	...	...	...	...	...		SB-395
													Naval Brass	
12,000	11,200	10,500	7,500	2,000	...	...	...	...	...	...	...	...		SB-171
12,000	11,200	10,500	7,500	2,000	...	...	...	...	...	...	...	...		
													Muntz Metal	
12,000	11,200	10,500	7,500	2,000	...	...	...	...	...	...	...	...		SB-111
													Leaded Muntz Metal	
12,000	11,200	10,500	7,500	2,000	...	...	...	...	...	...	...	...		SB-171
10,000	10,000	9,000	7,500	2,000	...	...	...	...	...	...	...	...		
8,000	8,000	8,000	7,500	2,000	...	...	...	...	...	...	...	...		
													Copper-Nickel, 60–40	
14,900	14,600	14,400	14,000	13,800	13,700	13,500	13,400	13,200	13,100	12,800	12,500	12,300		SB-111

TABLE UNF-23 (CONT'D)
MAXIMUM ALLOWABLE STRESS VALUES IN TENSION FOR NONFERROUS METALS, IN POUNDS PER SQUARE INCH
(See Par. UW-12(c) for vessels constructed under Part UW that include welded joints that are neither fully radiographed nor spot radiographically examined)

COPPER AND COPPER ALLOYS

Material and Specification Number		Condition	Size, in.	Specified Tensile Strength, psi	Minimum Yield Strength, psi	Notes	For Metal Temperatures Not Exceeding Deg F 100	150
Copper-Nickel, 60–40 (Cont'd)								
SB-395	U-Bend Seamless Condenser Tubes	Annealed	2 and under	64,000	28,000	...	15,800	15,200
SB-111	Seamless Condenser Tubes	Drawn, Stress Relieved	2 and under	85,000	65,000	...	21,000	20,500
SB-395	U-Bend Seamless Condenser Tubes	Drawn, Stress Relieved	2 and under	85,000	65,000	...	21,000	20,500
Copper-Nickel, 70–30								
SB-111	Seamless Condenser Tubes	Annealed	...	52,000	18,000	...	12,000	11,600
SB-111	Seamless Condenser Tubes	Drawn, Stress Relieved	2 and under	72,000	50,000	...	18,000	17,500
SB-171	Tube Plates	Annealed	2.5 and under	50,000	20,000	...	12,500	12,200
		Annealed	Over 2.5 to 5, incl.	45,000	18,000	...	11,200	10,800
SB-395	U-Bend Seamless Tubes	Annealed	...	52,000	18,000	...	12,000	11,600
SB-395	U-Bend Seamless Condenser Tubes	Drawn, Stress Relieved	2 and under	72,000	50,000	...	18,000	17,500
SB-402	Plate and Sheet	Annealed	...	45,000	18,000	...	11,200	10,800
Copper-Nickel, 80–20								
SB-111	Seamless Condenser Tubes	Annealed	...	45,000	16,000	...	10,700	10,600
SB-395	U-Bend Seamless Tubes	Annealed	...	45,000	16,000	...	10,700	10,600
Copper-Nickel, 90–10								
SB-111	Seamless Condenser Tubes	Annealed	...	40,000	15,000	...	10,000	10,000
SB-171	Tube Plates	Annealed	2.5 and under	40,000	15,000	...	10,000	10,000
SB-395	U-Bend Seamless Tubes	Annealed	...	40,000	15,000	...	10,000	10,000
SB-402	Plate and Sheet	Annealed	...	38,000	15,000	...	9,500	9,500
Copper-Nickel-Iron								
SB-111	Seamless Condenser Tubes	Annealed	...	74,000	36,000	...	18,300	17,800
SB-395	U-Bend Seamless Tubes	Annealed	...	74,000	36,000	...	18,300	17,800
Aluminum Bronze								
SB-111	Seamless Condenser Tubes	Annealed	...	50,000	19,000	...	12,500	12,400
SB-395	U-Bend Seamless Tubes	Annealed	...	50,000	19,000	...	12,500	12,400
Aluminum Bronze C								
SB-169	Plate, Sheet	Annealed	...	50,000	20,000	...	12,500	12,500
Aluminum Bronze D								
SB-169	Plate Sheet	Annealed	2 and under	70,000	30,000	...	17,500	17,500
		Annealed	Over 2 to 5, incl.	65,000	28,000	...	16,200	16,200
SB-171	Tube Plates	Annealed	2 and under	70,000	30,000	...	17,500	17,500
		Annealed	Over 2 to 5, incl.	65,000	28,000	...	16,200	16,200
Aluminum Bronze E								
SB-171	Tube Plates	Annealed	2 and under	90,000	36,000	...	22,500	22,500
		Annealed	Over 2 to 3.5 incl.	85,000	33,000	...	21,200	21,200
		Annealed	Over 3.5 to 5, incl.	80,000	30,000	...	20,000	20,000
Copper-Silicon A								
SB-98	Rods	Soft	...	52,000	15,000	(1)	10,000	10,000
SB-98	Rods	Half Hard	...	70,000	38,000	(1)	14,000	14,000
SB-315	Pipe and Tube	Annealed	...	50,000	15,000	...	10,000	10,000

TABLE UNF-23 (CONT'D)
MAXIMUM ALLOWABLE STRESS VALUES IN TENSION FOR NONFERROUS METALS, IN POUNDS PER SQUARE INCH
(See Par. UW-12(c) for vessels constructed under Part UW that include welded joints that are neither fully radiographed nor spot radiographically examined)
COPPER AND COPPER ALLOYS

For Metal Temperatures Not Exceeding Deg F													
200	250	300	350	400	450	500	550	600	650	700	750	800	
													Copper-Nickel, 60–40 (Cont'd)
14,900	14,600	14,400	14,000	13,800	13,700	13,500	13,400	13,200	13,100	12,800	12,500	12,300	SB-395
19,800	19,200	18,800	18,500	18,200	17,900	17,600	17,500	17,500	17,500	17,500	17,100	16,600	SB-111
19,800	19,200	18,800	18,500	18,200	17,900	17,600	17,500	17,500	17,500	17,500	17,100	16,600	SB-395
													Copper-Nickel, 70–30
11,300	11,000	10,800	10,600	10,300	10,100	9,900	9,800	9,600	9,500	9,400	...	...	SB-111
17,100	16,700	16,400	16,000	15,700	15,400	15,100	14,700	14,600	14,500	14,400	14,400	8,000	SB-111
11,900	11,600	11,300	11,000	10,800	10,600	10,400	10,200	10,000	9,800	9,700	...	...	SB-171
10,500	10,200	9,900	9,700	9,500	9,400	9,300	9,200	9,100	9,000	8,900	...	...	
11,300	11,000	10,800	10,600	10,300	10,100	9,900	9,800	9,600	9,500	9,400	...	...	SB-395
17,100	16,700	16,400	16,000	15,700	15,400	15,100	14,700	14,600	14,500	14,400	14,400	8,000	SB-395
10,500	10,200	9,900	9,700	9,500	9,400	9,300	9,200	9,100	9,000	8,900	...	...	SB-402
													Copper-Nickel, 80–20
10,500	10,400	10,300	10,100	9,900	9,600	9,300	8,900	8,400	7,700	7,000	...	...	SB-111
10,500	10,400	10,300	10,100	9,900	9,600	9,300	8,900	8,400	7,700	7,000	...	...	SB-395
													Copper-Nickel, 90–10
9,800	9,500	9,300	9,000	8,700	8,300	7,500	6,700	6,000	...	...	...	...	SB-111
9,800	9,500	9,300	9,000	8,700	8,300	8,000	7,000	6,000	...	...	...	...	SB-171
9,800	9,500	9,300	9,000	8,700	8,300	8,000	7,000	6,000	...	...	...	...	SB-395
9,300	9,000	8,800	8,500	8,200	7,900	7,600	6,600	5,700	...	...	...	...	SB-402
													Copper-Nickel-Iron
17,500	17,100	16,800	16,400	16,100	15,900	15,600	15,400	15,200	...	...	...	...	SB-111
17,500	17,100	16,800	16,400	16,100	15,900	15,600	15,400	15,200	...	...	...	...	SB-395
													Aluminum Bronze
12,200	11,900	11,600	10,000	6,000	4,000	2,000	...	...	...	...	...	...	SB-111
12,200	11,900	11,600	10,000	6,000	4,000	2,000	...	...	...	...	...	...	SB-395
													Aluminum Bronze C
...	...	...	...	...	...	...	...	...	...	...	...	...	SB-169
													Aluminum Bronze D
16,800	16,000	15,500	15,000	14,500	12,000	10,000	...	...	...	...	...	...	SB-169
15,600	15,000	14,500	14,000	13,500	12,000	10,000	...	...	...	...	...	...	
16,800	16,000	15,500	15,000	14,500	12,000	10,000	...	...	...	...	...	...	SB-171
15,600	15,000	14,500	14,000	13,500	12,000	10,000	...	...	...	...	...	...	
													Aluminum Bronze E
21,000	19,500	18,000	16,500	15,000	13,500	12,000	10,500	9,000	7,500	6,000	...	...	SB-171
19,800	18,400	17,000	15,600	14,300	12,900	11,500	10,100	8,700	7,400	6,000	...	...	
18,700	17,400	16,100	14,800	13,600	12,300	11,000	9,800	8,500	7,300	6,000	...	...	
													Copper-Silicon A
10,000	10,000	10,000	5,000	...	...	...	...	...	...	...	...	...	SB-98
14,000	14,000	14,000	10,000	...	...	...	...	...	...	...	...	...	SB-98
10,000	10,000	10,000	5,000	...	...	...	...	...	...	...	...	...	SB-315

TABLE UNF-23 (CONT'D)
MAXIMUM ALLOWABLE STRESS VALUES IN TENSION FOR NONFERROUS METALS, IN POUNDS PER SQUARE INCH
(See Par. UW-12(c) for vessels constructed under Part UW that include welded joints that are neither fully radiographed nor spot radiographically examined)

COPPER AND COPPER ALLOYS

Material and Specification Number		Condition	Size, in.	Specified Tensile Strength, psi	Minimum Yield Strength, psi	Notes	For Metal Temperatures Not Exceeding Deg F 100	150
Copper-Silicon A, C								
SB-96	Plates & Sheet	Annealed	...	50,000	18,000	(1)	12,000	12,000
Copper-Silicon B								
SB-98	Rods	Soft	...	40,000	12,000	(1)	8,000	8,000
SB-98	Rods	Half Hard	...	55,000	20,000	(1)	11,000	11,000
BOLTING						(3)		
Copper								
SB-12	Rod	Soft	...	30,000	10,000	. . .	2,500	2,500
Copper-Silicon A, D								
SB-98	Rod	Soft	...	52,000	15,000	(1)	3,800	3,800
		Quarter Hard	...	55,000	24,000	. . .	6,000	6,000
		Half Hard	...	70,000	38,000	. . .	9,500	9,500
Copper-Silicon B								
SB-98	Rod	Soft	All	40,000	12,000	(1)	3,000	3,000
		Bolt Temper	Up to ½, incl.	85,000	55,000	. . .	13,800	13,800
		Bolt Temper	Over ½ to 1, incl.	75,000	45,000	. . .	11,200	11,200
		Bolt Temper	Over 1 to 1½, inc.	75,000	40,000	. . .	10,000	10,000
Aluminum Bronze								
SB-150	Rod, Alloy No. 1	...	Up to ½, incl.	80,000	40,000	. . .	10,000	10,000
			Over ½ to 1, incl.	75,000	37,500	. . .	9,400	9,400
			Over 1	72,000	35,000	. . .	8,800	8,800
SB-150	Rod, Alloy No. 2	...	½ to 1, incl.	100,000	50,000	. . .	12,500	12,500
			Over 1 to 2, incl.	90,000	45,000	. . .	11,200	11,200
			Over 2 to 4, incl.	85,000	42,500	. . .	10,600	10,600
SB-150	Rod, Alloy No. 3	...	Up to ½, incl.	80,000	40,000	. . .	10,000	10,000
			Over ½ to 1, incl.	75,000	35,000	. . .	8,800	8,800
			Over 1 to 2, incl.	70,000	32,000	. . .	8,000	8,000
CASTINGS						(2)		
SB-61		...	...	34,000	16,000	. . .	8,500	8,400
SB-62		...	...	30,000	14,000	. . .	7,500	7,300
SB-143	Alloy 2A	...	...	34,000	16,000	. . .	8,500	8,400
SB-144	Alloy 3A	...	...	25,000	12,000	(4)	6,200	6,000
SB-149	Alloy11A	...	...	30,000	17,000	. . .	6,000	6,000

The stress values in this table may be interpolated to determine values for intermediate temperature.

Stress values in restricted shear such as dowel bolts, rivets, or similar construction in which the shearing member is so restricted that the section under consideration would fail without reduction of area shall be 0.80 times the values in the above table.

Stress values in bearing shall be 1.60 times the values in the above table.

TABLE UNF-23 (CONT'D)
MAXIMUM ALLOWABLE STRESS VALUES IN TENSION FOR NONFERROUS METALS, IN POUNDS PER SQUARE INCH
(See Par. UW-12(c) for vessels constructed under Part UW that include welded joints that are neither fully radiographed nor spot radiographically examined)

COPPER AND COPPER ALLOYS

For Metal Temperatures Not Exceeding Deg F													
200	250	300	350	400	450	500	550	600	650	700	750	800	
												Copper-Silicon A, C	
11,900	11,700	10,000	5,000	...	...	...	...	...	...	...	...	...	SB-96
												Copper-Silicon B	
8,000	8,000	7,000	5,000	...	...	...	...	...	...	...	...	...	SB-98
11,000	11,000	10,000	8,000	...	...	...	...	...	...	...	...	...	SB-98
												BOLTING	
												Copper	
2,500	2,400	2,200	2,100	2,000	...	...	...	...	...	...	...	...	SB-12
												Copper-Silicon A, D	
3,800	3,800	3,800	3,500	...	...	...	...	...	...	...	...	...	SB-98
5,900	5,800	5,600	5,500	...	...	...	...	...	...	...	...	...	
9,300	9,000	8,800	8,500	...	...	...	...	...	...	...	...	...	
												Copper-Silicon B	
3,000	3,000	2,900	2,800	...	...	...	...	...	...	...	...	...	SB-98
13,500	13,100	12,700	12,300	...	...	...	...	...	...	...	...	...	
11,100	10,800	10,500	10,000	...	...	...	...	...	...	...	...	...	
9,800	9,600	9,400	9,000	...	...	...	...	...	...	...	...	...	
												Aluminum Bronze	
10,000	9,900	9,800	9,800	9,700	9,500	9,400	9,000	7,500	6,000	4,500	...	...	SB-150
9,300	9,200	9,200	9,100	9,000	8,900	8,800	8,600	7,500	6,000	4,500	...	...	
8,700	8,600	8,600	8,500	8,400	8,300	8,200	8,000	7,500	6,000	4,500	...	...	
12,500	12,500	12,400	12,400	12,300	12,200	12,000	10,500	9,000	7,500	6,000	...	...	SB-150
11,200	11,200	11,200	11,200	11,100	11,000	10,800	10,500	9,000	7,500	6,000	...	...	
10,600	10,600	10,600	10,500	10,500	10,400	10,200	10,000	9,000	7,500	6,000	...	...	
10,000	9,900	9,800	9,700	9,600	9,500	7,000	...	...	...	...	...	...	SB-150
8,800	8,700	8,600	8,600	8,400	8,300	7,000	...	...	...	...	...	...	
7,900	7,800	7,800	7,600	7,600	7,400	7,000	...	...	...	...	...	...	
												CASTINGS	
8,300	8,200	8,100	7,900	7,600	7,200	6,600	5,000	...	...	...	...	...	SB-61
7,100	6,900	6,800	6,600	6,500	5,900	...	...	...	...	...	...	...	SB-62
8,300	8,200	8,100	7,900	7,600	7,200	6,600	5,000	...	...	...	...	...	SB-143
5,600	5,400	5,200	5,000	4,800	...	...	...	...	...	...	...	...	SB-144
5,800	5,500	5,000	...	...	...	...	...	...	...	...	...	...	SB-149

NOTES:

(1) Copper-silicon alloys are not always suitable when exposed to certain media and high temperatures, particularly steam above 212 F. The user should satisfy himself that the alloy selected is satisfactory for the service for which it is to be used.

(2) To these stress values a quality factor as specified in Par. UG-24 shall be applied for castings. This is not intended to apply to valves and fittings made to recognized standards.

(3) See Par. UNF-12

(4) No welding or brazing permitted.

TABLE UNF-23 (CONT'D)
MAXIMUM ALLOWABLE STRESS VALUES IN TENSION FOR NONFERROUS METALS, IN POUNDS PER SQUARE INCH
(See Par. UW-12(c) for vessels constructed under Part UW that include welded joints that are neither fully radiographed nor spot radiographically examined)

NICKEL AND HIGH-NICKEL ALLOYS

Material, Form, and Specification No.	Condition	Specified Tensile Strength, psi	Min. Yield Strength (0.2% Offset), psi
NICKEL			
Bar Rods, Shapes and Forgings			
SB-160	Hot or Cold Worked – Annealed	55,000	15,000
SB-160	Hot Rolled or Forged – Hot Finished	60,000	15,000
Bolting			
SB-160	Hot or Cold Worked – Annealed	55,000	15,000
SB-160	Hot Rolled or Forged – Hot Finished	60,000	15,000
SB-160	Cold Drawn – All Sizes – All Products	65,000	40,000
Pipe or Tube			
SB-161	Seamless – Annealed – 5" OD and Under	55,000	15,000
SB-161	Seamless – Annealed – Over 5" OD	55,000	12,000
SB-161	Seamless – Stress Relieved – All Sizes	65,000	40,000
Condenser Tube			
SB-163	Seamless – Annealed	55,000	15,000
SB-163	Seamless – Stress Relieved	65,000	40,000
Plate, Sheet or Strip			
SB-162	Hot or Cold Rolled – Annealed	55,000	15,000
SB-162 (Plate Only)	Hot Rolled – As Rolled	55,000	20,000
LOW CARBON NICKEL			
Bar, Rods, Shapes and Forgings			
SB-160	Annealed or Hot Finished – All products, all sizes	50,000	10,000
Bolting			
SB-160	Annealed or Hot Finished – All products, all sizes	50,000	10,000
Pipe or Tube			
SB-161	Seamless – Annealed – 5" OD and Under	50,000	12,000
SB-161	Seamless – Annealed – Over 5" OD	50,000	10,000
SB-161	Seamless – Stress Relieved – All sizes	60,000	30,000
Condenser Tube			
SB-163	Seamless – Annealed	50,000	12,000
SB-163	Seamless – Stress Relieved	60,000	30,000
Plate, Sheet or Strip			
SB-162	Hot Rolled and Hot or Cold Rolled – Annealed	50,000	12,000
NICKEL-COPPER			
Bar, Rods, Shapes and Forgings			
SB-164 (Class A and B)	Hot or Cold Worked – Annealed – All sizes, all products	70,000	25,000
SB-164 (Class A only)	Hot Finished – All sizes except Hex. over 2⅛"	80,000	40,000
SB-164 (Class A only)	Hot Finished – Hex. over 2⅛"	75,000	30,000
SB-164 (Class B only)	Hot Finished Rounds to 3", incl.	75,000	35,000
SB-164 (Class A only)	Hot Finished – Stress Relieved – 4" to 12" Diam, incl.	80,000	40,000
SB-164 (Class A only)	Hot Finished – Stress Relieved – Over 12" Diam	75,000	40,000

TABLE UNF-23 (CONT'D)
MAXIMUM ALLOWABLE STRESS VALUES IN TENSION FOR NONFERROUS METALS, IN POUNDS PER SQUARE INCH
(See Par. UW-12(c) for vessels constructed under Part UW that include welded joints that are neither fully radiographed nor spot radiographically examined)

NICKEL AND HIGH-NICKEL ALLOYS

For Metal Temperatures Not Exceeding Deg F												Material, Form, and Specification No.
100	200	300	400	500	600	700	800	900	1000	1100	1200	
												NICKEL
												Bar, Rods, Shapes and Forgings
10,000	10,000	10,000	10,000	10,000	10,000	...	...	...	...	...	...	SB-160
10,000	10,000	10,000	10,000	9,500	8,300	...	...	...	...	...	...	SB-160
												Bolting
3,700	3,700	3,700	3,700	3,700	3,700	...	...	...	...	...	...	SB-160
3,700	3,700	3,700	3,700	3,700	3,400	...	...	...	...	...	...	SB-160
10,000	9,600	9,600	9,600	9,500	9,200	...	...	...	...	...	...	SB-160
												Pipe or Tube
10,000	10,000	10,000	10,000	10,000	10,000	...	...	...	...	...	...	SB-161
8,000	8,000	8,000	8,000	8,000	8,000	...	...	...	...	...	...	SB-161
16,200	15,300	15,000	15,000	14,500	14,000	...	...	...	...	...	...	SB-161
												Condenser Tube
10,000	10,000	10,000	10,000	10,000	10,000	...	...	...	...	...	...	SB-163
16,200	15,300	15,000	15,000	14,500	14,000	...	...	...	...	...	...	SB-163
												Plate, Sheet or Strip
10,000	10,000	10,000	10,000	10,000	10,000	...	...	...	...	...	...	SB-162
13,300	13,300	13,300	13,300	12,500	11,500	...	...	...	...	...	...	SB-162 (Plate Only)
												LOW CARBON NICKEL
												Bar, Rods, Shapes and Forgings
6,700	6,400	6,300	6,200	6,200	6,200	6,200	5,900	4,500	3,000	2,000	1,200	SB-160
												Bolting
2,500	2,400	2,300	2,300	2,300	2,300	2,300	2,200	2,100	2,000	1,800	1,200	SB-160
												Pipe or Tube
8,000	7,700	7,500	7,500	7,500	7,500	7,400	7,200	4,500	3,000	2,000	1,200	SB-161
6,700	6,400	6,300	6,200	6,200	6,200	6,200	5,900	4,500	3,000	2,000	1,200	SB-161
15,000	14,200	13,800	13,500	13,500	13,000	...	...	...	...	...	...	SB-161
												Condenser Tube
8,000	7,700	7,500	7,500	7,500	7,500	7,400	7,200	4,500	3,000	2,000	1,200	SB-163
15,000	14,200	13,800	13,500	13,500	13,000	12,000	11,000	10,000	...	...	...	SB-163
												Plate, Sheet or Strip
8,000	7,700	7,500	7,500	7,500	7,500	7,400	7,200	4,500	3,000	2,000	1,200	SB-162
												NICKEL-COPPER
												Bar, Rods, Shapes and Forgings
16,600	14,600	13,600	13,200	13,100	13,100	13,100	13,100	8,000	...	...	...	SB-164 (Class A and B)
20,000	18,900	18,400	18,200	18,200	18,200	17,600	14,500	4,000	...	...	...	SB-164 (Class A only)
18,700	17,700	17,200	17,100	17,100	17,100	16,300	14,500	4,000	...	...	...	SB-164 (Class A only)
18,700	17,700	17,200	17,100	17,100	17,100	16,300	14,500	4,000	...	...	...	SB-164 (Class B only)
20,000	18,900	18,400	18,200	18,200	18,200	17,600	14,500	4,000	...	...	...	SB-164 (Class A only)
18,700	17,700	17,200	17,100	17,100	17,100	16,300	14,500	4,000	...	...	...	SB-164 (Class A only)

TABLE UNF-23 (CONT'D)
MAXIMUM ALLOWABLE STRESS VALUES IN TENSION FOR NONFERROUS METALS, IN POUNDS PER SQUARE INCH
(See Par. UW-12(c) for vessels constructed under Part UW that include welded joints that are neither fully radiographed nor spot radiographically examined)

NICKEL AND HIGH-NICKEL ALLOYS

Material, Form and Specification No.	Condition	Specified Tensile Strength, psi	Min. Yield Strength (0.2% Offset), psi	Notes
NICKEL-COPPER (Cont'd)				
Bolting				
SB-164 (Class A and B)	Annealed – All products, all sizes	70,000	25,000	...
SB-164 (Class A only)	Hot Finished – All sizes except Hex. over 2⅛"	80,000	40,000	...
SB-164 (Class A only)	Hot Finished – Hex. over 2⅛"	75,000	30,000	...
SB-164 (Class B only)	Hot Finished Rounds to 3" Diam, incl.	75,000	35,000	...
SB-164 (Class A only)	Cold Drawn – Stress Relieved – All sizes	84,000	50,000	(1)
SB-164 (Class A only)	Cold Drawn – Stress Equalized – Rounds to 3½", incl.	90,000	70,000	(1)
SB-164 (Class A only)	Cold Drawn – Stress Equalized – Other Sizes and Shapes	85,000	55,000	(1)
SB-164 (Class A only)	Cold Drawn – As Drawn – All sizes	85,000	55,000	(1)
SB-164 (Class B only)	Cold Drawn – As Drawn – All sizes	85,000	50,000	(1)
Pipe or Tube				
SB-165	Seamless – Annealed – 5" OD and Under	70,000	28,000	...
SB-165	Seamless – Annealed – Over 5" OD	70,000	25,000	...
SB-165	Seamless – Stress Relieved, All sizes	85,000	55,000	(1)
Condenser Tube				
SB-163	Seamless – Annealed – All sizes to 3", incl.	70,000	28,000	...
SB-163	Seamless – Stress Relieved – ½" to ⅞" Diam, incl.	90,000	55,000	...
SB-163	Seamless – Stress Relieved – Other sizes	85,000	55,000	...
Plate, Sheet or Strip				
SB-127	Hot or Cold Rolled – Annealed	70,000	28,000	...
SB-127 (Plate Only)	Hot Rolled – As Rolled	75,000	40,000	...
NICKEL–CHROMIUM–IRON				
Bar, Rods, Shapes & Forgings				
SB-166	Hot or Cold Worked – Annealed	80,000	35,000	...
SB-166	Hot Finished – All Sizes	85,000	35,000	...
Bolting				
SB-166	Hot or Cold Worked – Annealed – All sizes	80,000	35,000	...
SB-166	Hot Finished – Rounds over 3" and Shapes – All sizes	85,000	35,000	...
SB-166	Hot Finished – Rounds to 3", incl.	90,000	40,000	...
SB-166	Cold Drawn – All sizes	90,000	40,000	(1)(3)
Pipe or Tube				
SB-167	Seamless – Hot Finished or Hot Finished – Annealed – 5" OD and under	80,000	30,000	...
SB-167	Seamless – Hot Finished or Hot Finished – Annealed – over 5" OD	75,000	25,000	...
SB-167	Seamless – Cold Drawn – Annealed – 5" OD and under	80,000	35,000	...
SB-167	Seamless – Cold Drawn – Annealed – over 5" OD	80,000	30,000	...
Condenser Tube				
SB-163	Seamless – Annealed – All sizes to 3", incl.	80,000	35,000	...
Plate, Sheet or Strip				
SB-168	Hot or Cold Rolled – Annealed	80,000	35,000	...
SB-168 (Plate only)	Hot Rolled – As Rolled	85,000	35,000	...

TABLE UNF-23 (CONT'D)
MAXIMUM ALLOWABLE STRESS VALUES IN TENSION FOR NONFERROUS METALS, IN POUNDS PER SQUARE INCH
(See Par. UW-12(c) for vessels constructed under part UW that include welded joints that are neither fully radiographed nor spot radiographically examined)

NICKEL AND HIGH-NICKEL ALLOYS

For Metal Temperatures Not Exceeding Deg F												Material, Form and Specification No.
100	200	300	400	500	600	700	800	900	1000	1100	1200	
												NICKEL-COPPER (Cont'd)
												Bolting
6,100	5,700	5,200	5,000	4,900	4,900	4,900	4,900	4,700	...	...	...	SB-164 (Class A and B)
10,000	9,600	9,400	9,000	8,500	8,500	8,500	8,300	4,000	...	...	...	SB-164 (Class A only)
7,500	7,400	7,100	6,800	6,500	6,500	6,400	6,200	4,000	...	...	...	SB-164 (Class A only)
8,800	8,500	8,300	7,900	7,600	7,600	7,500	7,300	4,000	...	...	...	SB-164 (Class B only)
12,500	11,900	11,500	11,300	11,300	...	...	...	...	...	...	...	SB-164 (Class A only)
17,400	16,900	16,200	15,500	15,400	...	...	...	...	...	...	...	SB-164 (Class A only)
13,700	13,000	12,600	12,400	12,300	...	...	...	...	...	...	...	SB-164 (Class A only)
13,700	13,000	12,600	12,400	12,300	...	...	...	...	...	...	...	SB-164 (Class A only)
12,400	12,000	11,500	11,100	11,100	...	...	...	...	...	...	...	SB-164 (Class B only)
												Pipe or Tube
17,500	16,500	15,500	14,800	14,700	14,700	14,700	14,500	8,000	...	...	...	SB-165
16,600	14,600	13,600	13,200	13,100	13,100	13,100	13,100	8,000	...	...	...	SB-165
21,200	20,200	19,500	19,200	19,200	(1)	...	...	...	...	...	...	SB-165
												Condenser Tube
17,500	16,500	15,500	14,800	14,700	14,700	14,700	14,500	8,000	...	...	...	SB-163
22,500	21,200	20,700	20,500	20,500	20,500	19,500	15,000	(2)	...	...	...	SB-163
21,200	20,200	19,500	19,200	19,200	19,200	18,500	15,000	(2)	...	...	...	SB-163
												Plate, Sheet or Strip
17,500	16,500	15,500	14,800	14,700	14,700	14,700	14,500	8,000	...	...	...	SB-127
18,700	17,500	17,000	17,000	17,000	17,000	16,500	14,500	4,000	...	...	...	SB-127 (Plate Only)
												NICKEL–CHROMIUM–IRON
												Bar, Rods, Shapes & Forgings
20,000	19,300	18,800	18,500	18,500	18,500	18,500	18,500	16,000	7,000	3,000	2,000	SB-166
21,200	20,200	20,000	20,000	20,000	20,000	20,000	20,000	19,500	14,500	7,200	5,500	SB-166
												Bolting
8,700	8,100	7,800	7,700	7,600	7,500	7,300	7,100	6,900	6,800	3,000	2,000	SB-166
8,700	8,500	8,200	8,000	7,900	7,900	7,900	7,700	7,400	7,300	7,200	5,500	SB-166
10,000	9,500	9,200	9,100	9,100	9,100	8,900	8,800	8,600	8,300	7,300	5,500	SB-166
10,000	9,500	9,200	9,100	9,100	...	...	...	...	...	...	...	SB-166
												Pipe or Tube
20,000	19,100	18,200	17,450	16,850	16,100	15,600	15,300	14,900	7,000	3,000	2,000	SB-167
16,650	15,300	14,500	14,000	13,600	13,200	13,000	12,750	11,800	7,000	3,000	2,000	SB-167
20,000	19,300	18,800	18,500	18,500	18,500	18,500	18,500	16,000	7,000	3,000	2,000	SB-167
20,000	19,100	18,200	17,450	16,850	16,100	15,600	15,300	14,900	7,000	3,000	2,000	SB-167
												Condenser Tube
20,000	19,300	18,800	18,500	18,500	18,500	18,500	18,500	16,000	7,000	3,000	2,000	SB-163
												Plate, Sheet or Strip
20,000	19,300	18,800	18,500	18,500	18,500	18,500	18,500	16,000	7,000	3,000	2,000	SB-168
21,200	20,200	20,000	20,000	20,000	20,000	20,000	20,000	19,500	14,500	7,200	5,500	SB-168 (Plate only)

TABLE UNF-23 (CONT'D)
MAXIMUM ALLOWABLE STRESS VALUES IN TENSION FOR NONFERROUS METALS, IN POUNDS PER SQUARE INCH
(See Par. UW-12(c) for vessels constructed under Part UW that include welded joints that are neither fully radiographed nor spot radiographically examined)

NICKEL AND HIGH-NICKEL ALLOYS

Material, Form, and Specification No.	Condition	Specified Tensile Strength, psi	Min. Yield Strength (0.2% Offset), psi
NICKEL-MOLYBDENUM			
Rod			
SB-335	Hot Finished Annealed 5/16" to 1½" incl.	115,000	46,000
	Hot Finished Annealed Over 1½" to 3½"	100,000	
Bolting			
SB-335	Hot Finished Annealed 5/16" to 1½" incl.	115,000	46,000
	Hot Finished Annealed Over 1½" to 3½"	100,000	
Plate Sheet			
SB-333	Hot Rolled Annealed under 3/16"	115,000	50,000
SB-333 (Plate)	Hot Rolled Annealed 3/16" to ¾", incl.	100,000	45,000
SB-333 (Plate)	Hot Rolled Annealed over ¾" to 2½", incl.	90,000	45,000
NICKEL-MOLYBDENUM-CHROMIUM			
Rod			
SB-336	Hot Finished Annealed 5/16" to 3½", incl.	100,000	46,000
Bolting			
SB-336	Hot Finished Annealed 5/16" to 3½", incl.	100,000	46,000
Plate, Sheet			
SB-334	Hot Rolled Annealed under 3/16"	115,000	50,000
SB-334 (Plate)	Hot Rolled Annealed 3/16" to ¾", incl.	100,000	45,000
SB-334 (Plate)	Hot Rolled Annealed over ¾" to 2½", incl.	90,000	45,000
NICKEL-IRON-CHROMIUM-MOLYBDENUM-COPPER			
Rod			
SB-425	Annealed	85,000	35,000
Pipes and Tubes			
SB-423	Cold Drawn-Annealed	85,000	35,000
Plate, Sheet and Strip			
SB-424	Annealed	85,000	35,000

NOTES:

The stress values in this table may be interpolated to determine values for intermediate temperature.

Stress values in restricted shear such as dowel bolts, rivets, or similar construction in which the shearing member is so restricted that the section under consideration would fail without reduction of area shall be 0.80 times the values in the above table.

Stress values in bearing shall be 1.60 times the values in the above table.

(1) The maximum operating temperature is arbitrarily set at 500 F, because harder temper adversely affects design stress in the creep-rupture temperature range.

(2) 2000 psi at 900 F, use annealed condition above 800 F.

(3) Design stresses for the cold drawn temper based on hot rolled properties until required data on cold drawn is submitted.

TABLE UNF-23 (CONT'D)
MAXIMUM ALLOWABLE STRESS VALUES IN TENSION FOR NONFERROUS METALS, IN POUNDS PER SQUARE INCH
(See Par. UW-12(c) for vessels constructed under Part UW that include welded joints that are neither fully radiographed nor spot radiographically examined)

NICKEL AND HIGH-NICKEL ALLOYS

For Metal Temperatures Not Exceeding Deg F												Material, Form, and Specification No.
100	200	300	400	500	600	700	800	900	1000	1100	1200	
												NICKEL-MOLYBDENUM
												Rod
22,000	20,000	20,000	20,000	20,000	20,000	20,000	...	...	...	...	...	SB-335
												Bolting
11,200	10,000	9,800	9,100	8,800	8,300	8,300	...	...	...	...	...	SB-335
												Plate Sheet
22,000	20,000	20,000	20,000	20,000	20,000	20,000	...	...	...	...	...	SB-333
22,000	20,000	20,000	20,000	20,000	20,000	20,000	...	...	...	...	...	SB-333 (Plate)
22,000	20,000	20,000	20,000	20,000	20,000	20,000	...	...	...	...	...	SB-333 (Plate)
												NICKEL-MOLYBDENUM-CHROMIUM
												Rod
22,000	20,000	20,000	20,000	20,000	20,000	19,000	19,000	18,000	18,000	...	...	SB-336
												Bolting
10,000	10,000	9,200	8,500	8,500	8,500	8,500	8,500	8,500	8,500	...	...	SB-336
												Plate, Sheet
22,000	20,000	20,000	20,000	20,000	20,000	19,000	19,000	18,000	18,000	...	...	SB-334
22,000	20,000	20,000	20,000	20,000	20,000	19,000	19,000	18,000	18,000	...	...	SB-334 (Plate)
22,000	20,000	20,000	20,000	20,000	20,000	19,000	19,000	18,000	18,000	...	...	SB-334 (Plate)
												NICKEL-IRON-CHROMIUM MOLYBDENUM-COPPER
												Rod
21,000	20,250	18,700	17,550	16,650	16,200	15,650	...	...	...	...	...	SB-425
												Pipes and Tubes
21,000	20,250	18,700	17,550	16,650	16,200	15,650	...	...	...	...	...	SB-423
												Plate, Sheet and Strip
21,000	20,250	18,700	17,550	16,650	16,200	15,650	...	...	...	...	...	SB-424

TABLE UNF-23 (CONT'D)
MAXIMUM ALLOWABLE STRESS VALUES IN TENSION FOR NONFERROUS METALS, IN POUNDS PER SQUARE INCH
(See Par. UW-12(c) for vessels constructed under Part UW that include welded joints that are neither fully radiographed nor spot radiographically examined)

Material; Form, and Specification No.	Condition	Specified Tensile Strength, psi	Min. Yield Strength (0.2% Offset), psi	For Metal Temperatures Not Exceeding Deg F 100	150	200	250	300	350	400	450	500	550	600
UNALLOYED TITANIUM														
SHEET, STRIP, PLATE														
SB-265	Grade 1–Annealed	40000	30000	9600	8700	7900	7200	6600	6000	5600	5200	4800	4500	4200
	2–Annealed	50000	40000	12000	10900	9900	9000	8200	7600	7000	6500	6000	5600	5200
	3–Annealed	60000	50000	14400	13000	11800	10800	9900	9120	8400	7800	7200	6800	6300
PIPE														
SB-337	Grade 1–Seamless Ann.	35000	25000	8400	7600	6900	6300	5700	5300	4900	4500	4200	3900	3600
	2–Seamless Ann.	50000	40000	12000	10900	9900	9000	8200	7600	7000	6500	6000	5600	5200
	3–Seamless Ann.	65000	55000	15600	14100	12800	11700	10700	9800	9100	8450	7800	7300	6800
	7–Seamless Ann.	50000	40000	12000	10900	9900	9000	8200	7600	7000	6500	6000	5650	5200
	Grade 1–Welded Ann.	35000	25000	7100	6400	5800	5300	4800	4500	4100	3800	3500	3300	3000
	2–Welded Ann.	50000	40000	10100	9200	8400	7600	6900	6400	5900	5500	5100	4800	4400
	3–Welded Ann.	65000	55000	13200	12000	10900	9900	9100	8300	7700	7100	6600	6200	5700
	7–Welded Ann.	50000	40000	10100	9200	8400	7600	6900	6400	5900	5500	5100	4800	4400
TUBING														
SB-338	Grade 1–Seamless Ann.	35000	25000	8400	7600	6900	6300	5700	5300	4900	4500	4200	3900	3600
	2–Seamless Ann.	50000	40000	12000	10900	9900	9000	8200	7600	7000	6500	6000	5600	5200
	3–Seamless Ann.	65000	55000	15600	14100	12800	11700	10700	9800	9100	8450	7800	7300	6800
	7–Seamless Ann.	50000	40000	12000	10900	9900	9000	8200	7600	7000	6500	6000	5650	5200
	Grade 1–Welded Ann.	35000	25000	7100	6400	5800	5300	4800	4500	4100	3800	3500	3300	3000
	2–Welded Ann.	50000	40000	10100	9200	8400	7600	6900	6400	5900	5500	5100	4800	4400
	3–Welded Ann.	65000	55000	13200	12000	10900	9900	9100	8300	7700	7100	6600	6200	5700
	7–Welded Ann.	50000	40000	10100	9200	8400	7600	6900	6400	5900	5500	5100	4800	4400
FORGINGS														
SB-381	Grade F1 Annealed	40000	30000	9600	8700	7900	7200	6600	6000	5600	5200	4800	4500	4200
	F2 Annealed	50000	40000	12000	10900	9900	9000	8200	7600	7000	6500	6000	5600	5200
	F3 Annealed	60000	50000	14400	13000	11800	10800	9900	9120	8400	7800	7200	6800	6300
BAR & BILLET														
SB-348	Grade 1–Annealed	40000	30000	9600	8700	7900	7200	6600	6000	5600	5200	4800	4500	4200
	2–Annealed	50000	40000	12000	10900	9900	9000	8200	7600	7000	6500	6000	5600	5200
	3–Anneled	60000	50000	14400	13000	11800	10800	9900	9120	8400	7800	7200	6800	6300

specifically to the inspection and testing of pressure vessels and vessel parts that are constructed of nonferrous materials and shall be used in conjunction with the general requirements for *Inspection and Tests* in Subsection A, and with the specific requirements for *Inspection and Tests* in Subsection B that pertain to the method of fabrication used.

UNF-91 Requirements for Penetrameter

If the filler metal is of the same composition as the base metal, the penetrameter may be placed adjacent to the weld, otherwise it shall be placed on the deposited weld metal (see Par. UW-51(e)).

UNF-95

If a vessel of welded unalloyed titanium construction incorporates joints of categories A or B as described in Par. UW-3, a production test plate of the same specification, grade, and thickness shall be made of sufficient size to provide at least one face and one root bend specimen. Where longitudinal joints are involved, the test plate shall be attached to one end of the longitudinal joint and welded continuously with the joint. Where circumferential joints only are involved, the test plate need not be attached but shall be welded along with the joint. One test plate is required for each vessel by each welder or welding operator working on the vessel, provided not over 100 feet of category A or B joints are involved. An additional test plate, meeting the same requirements as outlined above, shall be made for each additional 100 feet of category A or B joints involved. The bend specimens shall be tested in accordance with Section IX, Pars. QN-7 and QN-8. Failure of either bend specimen constitutes rejection of the weld.

STAMPING AND REPORTS

UNF-115 General

The provisions for stamping and reports in Pars. UG-115 through UG-120 shall apply without supplement to pressure vessels constructed of nonferrous materials.

PRESSURE-RELIEF DEVICES

UNF-125 General

The provisions for pressure-relief devices in Pars. UG-125 through UG-134 shall apply without supplement to pressure vessels constructed of nonferrous materials.

APPENDIX NF

CHARACTERISTICS OF THE NONFERROUS MATERIALS

(Informative and Non-Mandatory)

1 Purpose

This appendix summarizes the major properties and fabricating techniques suitable for the nonferrous materials.

2 General

The nonferrous materials can be formed and fabricated into a variety of types of assemblies with the same types of fabricating equipment as are used for steel. The details of some fabricating procedures vary among the several nonferrous materials and differ from those used for steel because of differences in the inherent mechanical properties of these materials. Detailed information regarding procedures best suited to the several metals may be obtained from the literature of the material producers, and from other reliable sources such as the latest editions of handbooks issued by the American Welding Society and the American Society for Metals.

3 Properties

The specified mechanical properties, as listed in Table UNF-23, show a wide range of strengths. The maximum allowable stress values show a correspondingly wide range and a variable relationship to service temperature. The maximum temperature listed for any material is the temperature above which that material is not customarily used. Table NF-1 gives additional mechanical properties, while physical properties are given in Table NF-2. Annealing temperatures are listed in Table NF-3 and hot-working temperatures are set forth in Table NF-4.

4 Magnetic Properties

Both aluminum and copper are practically nonmagnetic, but nickel, like steel, is strongly magnetic at room temperature. The Curie temperature (the temperature at which a metal loses its magnetic properties) of nickel is 680 F. Nickel-copper alloy is slightly magnetic at room temperature and has a Curie temperature of 110-140 F, depending on slight variations in copper content and other alloy elements. Nickel-chromium-iron alloy is nonmagnetic at room temperature and has a Curie temperature of –40 F. These statements suggest a simple magnetic test for differentiating the nickel alloys.

5 Cooling Rates

The nonferrous alloys in general do not harden when quenched from an elevated temperature. Therefore the rate of cooling from an elevated temperature is unimportant, except where specifically indicated. Preheating for controlling the rate of cooling during welding is not necessary.

6 Low-Temperature Behavior

The nonferrous alloys listed in Table UNF-23 do not exhibit a transition range at low temperatures as do some ferrous materials and hence do not suffer a loss of impact resistance at low temperatures. The static tensile strength increases as the temperature decreases, and the ductility as measured by per cent elongation is not adversely affected to any significant degree. For these reasons low-temperature impact tests of nonferrous materials are not required by this Division of Section VIII.

7 Thermal Cutting

In general, nonferrous materials cannot be cut by the conventional oxy-acetylene cutting equipment commonly used for steel. They may be melted and cut by oxy-acetylene, powder cutting carbon arc, oxygen arc and other means. When such thermal means for cutting are employed a shallow contaminated area adjacent to the cut results. This contamination should be removed by grinding, machining, or other mechanical means after thermal cutting and prior to use or further fabrication by welding.

TABLE NF-1

TYPICAL MECHANICAL PROPERTIES OF MATERIALS

Material	Modulus of Elasticity, psi	Poisson's Ratio	Modulus of Rigidity, psi
Aluminum	10,000,000	0.33	3,800,000
Copper, Deoxidized	17,000,000	0.33	6,400,000
Red Brass	17,000,000	0.33	6,400,000
Admiralty	16,000,000	0.33	6,000,000
Aluminum Brass	16,000,000	0.33	6,000,000
Naval Brass	15,000,000	0.33	5,600,000
Muntz Metal	15,000,000	0.33	5,600,000
30% Cupro Nickel	22,000,000	0.33	8,200,000
20% Cupro Nickel	20,000,000	0.33	7,500,000
10% Cupro Nickel	18,000,000	0.33	6,800,000
Copper Silicon (A, C, D)	15,000,000	0.33	5,600,000
Copper Silicon (B)	17,000,000	0.33	6,400,000
Aluminum Bronze (D)	17,500,000	0.33	6,500,000
Aluminum Bronze (E)	17,000,000	0.33	6,400,000
Nickel	30,000,000	0.31	11,000,000
Nickel-Copper	26,000,000	0.32	9,500,000
Ni-Cr-Fe	31,000,000	0.29	11,000,000
Steel	29,000,000	0.30	11,200,000
Unalloyed Titanium	16,000,000	0.32	6,000,000
Nickel-Iron-Chromium	28,500,000	0.339	10,600,000

8 Machining

The nonferrous materials can be machined with properly sharpened tools of high-speed steel or cemented-carbide tools. A coolant is necessary and should be used copiously. In general, the tools should have more side and top rake than required for cutting steel and the edges should be keen and smooth. Comparatively high speeds and fine feeds give best results. Information can be obtained from the material producers and the Metals Handbook for conditions to give optimum results.

9 Gas Welding

The commonly used gas processes for welding aluminum-base materials employ oxyhydrogen or oxyacetylene flames whereas only the latter produces sufficient heat for welding the copper-base and nickel-base alloys. For the aluminum, nickel and cupro-nickel alloys a neutral to slightly reducing flame should be used, whereas for copper base materials the flame should be neutral to slightly oxidizing. A suitable flux, applied to the welding rod and the work, shall be used except that no flux is required for nickel. Boron-free and phosphorus-free fluxes are required for nickel-copper alloy and for nickel-chromium-iron alloy. Residual deposits of flux shall be removed.

10 Metal-Arc Welding

Metal-arc welds can be made with standard d-c equipment using reversed polarity (electrode-positive) and coated electrodes. A slightly greater included angle in butt welds for adequate manipulation of the electrode is required.

11 Inert-Gas Metal-Arc Welding

Both the consumable and non-consumable electrode processes are particularly advantageous for use with the nonferrous materials. Best results are obtained through the use of special filler metals.

12 Resistance Welding

Electric-resistance welding, which includes spot, line or seam, and butt or flash welding, can be used with the nonferrous materials. Proper equipment and technique are required for making satisfactory welds.

13 Corrosion

(a) *General* The nonferrous materials listed in Table UNF-23 offer greater resistance to corrosion in many applications than does mild steel. For information on the differences that exist among the nonferrous materials on the subject of corrosion, reference may be made to the following sources:

TABLE NF-2

TYPICAL PHYSICAL PROPERTIES OF MATERIALS

Material	ASME Spec. No.	Weight lb per cu in.	Approx. Melting Range °F	Thermal Conductivity 32 F–212 F BTU/sq ft/hr °F/in.	Thermal Expansion 10^{-6} in./in. °F	Specific Heat BTU/lb/°F at 212 F
Al Alloy 1060	SB-209, SB-210, SB-221, SB-234	0.098	1195–1215	1625	13.1 (a)	0.23
1100	SB-209	0.098	1190–1215	1540	13.1 (a)	0.23
2014	SB-211, SB-247	0.101	950–1180	930[3] 1070[5]	12.8 (a)	0.23
2024	SB-211, SB-221	0.100	935–1180	840[3]	12.9 (a)	0.23
3003	SB-209, SB-210, SB-221, SB-234, SB-241, SB-247	0.099	1190–1210	1340[1]	12.9 (a)	0.23
3004	SB-209	0.098	1165–1205	1130	13.3 (a)	0.23
5050	SB-209	0.097	1160–1205	1340	13.2 (a)	0.23
5052	SB-209, SB-234	0.097	1100–1200	960	13.2 (a)	0.23
5083	SB-209, SB-221, SB-241, SB-247	0.096	1060–1180	810	13.2 (a)	0.23
5086	SB-209	0.096	1084–1184	870	13.2 (a)	0.23
5154	SB-209, SB-210, SB-221, SB-241	0.096	1100–1190	870	13.3 (a)	0.23
5454	SB-209, SB-221, SB-234, SB-241	0.097	1115–1195	930	13.1 (a)	0.23
5456	SB-209, SB-221, SB-241, SB-247	0.096	1060–1180	810	13.3 (a)	0.23
6053	SB-247	0.097	1100–1205	1130[5]	12.8 (a)	0.23
6061	SB-209, SB-210, SB-211, SB-221, SB-234, SB-241, SB-308	0.098	1100–1205	1070[3] 1160[5]	13.1 (a)	0.23
6063	SB-210, SB-221	0.097	1140–1205	1340[2] 1450[4] 1390[5]	13.0 (a)	0.23
S5A	SB-26	0.097	1065–1170	1015[6]	12.4 (a)	0.23
SG70A	SB-26	0.097	1035–1135	1045[5] 1075[7]	11.9 (a)	0.23
Copper, Deoxidized	SB-11 & 111	0.323	1980	2352	9.8 (b)	0.09
Red Brass	SB-111 & 43	0.316	1810–1880	1104	10.4 (b)	0.09
Admiralty	SB-111 & 171	0.308	1650–1720	768	11.2 (b)	0.09
Aluminum Brass	SB-111	0.301	1710–1780	696	10.3 (b)	0.09
Naval Brass	SB-171	0.304	1630–1650	804	11.8 (b)	0.09
Muntz Metal	SB-171	0.303	1650–1660	852	11.6 (b)	0.09
30% Cupro Nickel	SB-111 & 171	0.323	2140–2260	204	9.1 (b)	0.09
20% Cupro Nickel	SB-111 & 171	0.323	2100–2200	240	9.3 (b)	0.09
10% Cupro Nickel	SB-111	0.323	2020–2100	324	9.5 (b)	0.09
Copper Silicon (A,C,D)	SB-96 & 98	0.308	1780–1880	252	10.0 (b)	0.09
Copper Silicon (B)	SB-98	0.316	1890–1940	396	9.9 (b)	0.09
Aluminum Bronze (D)	SB-171	0.281	1850–1900	552	9.0	0.09
Aluminum Bronze (E)	SB-171	0.274	1900–1930	264		0.09
Nickel and Low-Carbon Nickel	SB-162	0.321	2615–2635	420	7.2 (c)	0.13
Nickel-Copper	SB-127	0.319	2370–2460	180	7.8 (c)	0.13
Ni-Cr-Fe	SB-168	0.300	2540–2600	104	6.4 (c)	0.11
Carbon Steel		0.279		460	6.7 (c)	
Unalloyed Titanium	SB-265, SB-337, SB-338, SB-381	0.163	3100	10.5	4.7	0.13
Nickel-Iron-Chromium	SB-409	0.290	2475–2525	80	7.9	0.12

(a) Thermal expansion per °F from 68 F to 212 F.
(b) Thermal expansion per °F from 68 F to 572 F.
(c) Thermal expansion per °F from 32 F to 212 F.

[1] Annealed Temper
[2] T1 Temper
[3] T4 Temper
[4] T5 Temper
[5] T6 Temper
[6] F Temper
[7] T71 Temper

TABLE NF-3
USUAL RANGES OF ANNEALING TEMPERATURE AND TIME

Material	ASME Spec. No.	Temperature Range °F	Time at Temperature Minutes
Al Alloy 1060	SB-209, SB-210, SB-221, SB-234	650–750	Footnote 2
1100	SB-209	650–750	Footnote 2
2014[1]	SB-211, SB-247	750–800	120–180
2024[1]	SB-211, SB-221	750–800	120–180
3003	SB-209, SB-210, SB-221, SB-234, SB-241, SB-247	750–800	Footnote 2
3004	SB-209	650–750	Footnote 2
5050	SB-209	650–750	Footnote 2
5052	SB-209, SB-234	650–750	Footnote 2
5083	SB-209, SB-221, SB-241, SB-247	650–750	Footnote 2
5086	SB-209	650–750	Footnote 2
5154	SB-209, SB-210, SB-221, SB-241	650–750	Footnote 2
5454	SB-209, SB-221, SB-234, SB-241	650–750	Footnote 2
5456	SB-209, SB-221, SB-241, SB-247	650–750	Footnote 2
6053[1]	SB-247	750–800	120–180
6061[1]	SB-209, SB-210, SB-211, SB-221, SB-234, SB-241, SB-247, SB-308	750–800	120–180
6063[1]	SB-210, SB-221	750–800	120–180
Copper, Deoxidized	SB-11 & 111	700–1220	15–30
Red Brass	SB-43 & 111	800–1350	15–30
Admiralty	SB-111 & 171	800–1100	15–30
Aluminum Brass	SB-111	800–1100	15–30
Naval Brass	SB-171	800–1100	15–30
Muntz Metal	SB-111 & 171	800–1100	15–30
30% Cupro Nickel	SB-111 & 171	1200–1600	15–30
20% Cupro Nickel	SB-111	1200–1600	15–30
10% Cupro Nickel	SB-111	1100–1500	15–30
Copper Silicon (A, C, D)	SB-96 & 98	900–1300	15–30
Copper Silicon (B)	SB-98	900–1250	15–30
Aluminum Bronze (D)	SB-171	1400–1500	15–60
Aluminum Bronze (E)	SB-171	1250–1350	15–30
Nickel and Low-Carbon Nickel	SB-162	1500–1700	20–25
Nickel-Copper	SB-127	1600–1800	20–25
Ni-Cr-Fe	SB-168	1750–1950	20–25
Unalloyed Titanium	SB-265, SB-337, SB-338, SB-381	(See Par. NF-14)	
Nickel-Iron-Chromium	SB-409	1750–2150	15–60

[1] Material initially in a heat treated temper. Annealing treatment should be followed by slow cool at 50 F per hour to 450–500 F. Subsequent rate of cool to room temperature not important.

[2] Actual attainment of annealing temperature is of more consequence than annealing time. Cooling rate is unimportant.

(1) Corrosion Handbook (The Electro-Chemical Society);
(2) Metals Handbook (American Society for Metals);
(3) Metals of Construction, Industrial and Engineering Chemistry, Vol. 43, Oct., 1951;
(4) Corrosion Resistance of Metals and Alloys, McKay and Worthington (1936);
(5) Corrosion Guide, Erich Rabald (1951);
(6) Corrosion Data Survey, G. A. Nelson, Shell Development Company.

(b) *Stress-Corrosion* Because of the occasionally contingent danger from the failure of pressure vessels by stress-corrosion cracking, the following seems pertinent. The materials listed in Table UNF-23 are suitable for engineering use under a wide variety of ordinary corrosive conditions, with no particular hazard in respect to stress-corrosion. However, few alloys are completely immune to stress-corrosion cracking in all combinations of stress and corrosive environments and the supplier of the material should be consulted.

(c) *Galvanic Corrosion* By virtue of their relative solution potentials, some materials are anodic to others in the presence of an electrolyte. The extent of galvanic attack will vary with the nature, concentration and temperature of the environment, and with the inherent characteristics of the dissimilar metals and their relative areas. Where practicable avoid dissimilar metals or select special precautions, such as insulation between dissimilar-metal parts. The use of protective coatings should be considered.

14 Special Comments

ALUMINUM

Threaded Connections Under some conditions of loading, aluminum and aluminum-alloy threaded connections seize so that repeated tightening and loosening are impossible. All threaded connections should be treated with a suitable anti-seize compound.[1]

Dissimilar Metals If dissimilar metals must be used in combination with aluminum alloys, the best choices would ordinarily be galvanized steel and stainless steel, austenitic types preferred.

NICKEL

Sulfur Embrittlement Nickel combines with sulfur at elevated temperatures to form a brittle sulfide. This phenomenon takes place preferentially at the grain boundaries, and results in embrittlement which exhibits itself as a network of cracks when the material is stressed or bent. Nickel is affected most, nickel-copper somewhat less and nickel-chromium-iron still less. Table NF-5 lists the normal limiting service temperatures. The more sulfur present or the higher the temperature, the more rapid and deep will be the attack.

Material which has been sulfur-embrittled cannot be salvaged. It must be scrapped.

Prior to any operation which involves heating to a high temperature such as welding, brazing, annealing, hot forming, and forging, it is imperative to remove all sulfur-containing substances such as oil, grease, marking-pencil marks, paint, and drawing or threading lubricants. in addition, the atmosphere of the furnace in which heating is done should be essentially sulfur-free. A city gas or natural gas containing less than 25 grains of sulfur per 100 cubic feet or a fuel oil containing less than 0.5 per cent sulfur will be satisfactory for heating. Coal and coke are not satisfactory.

Lead Embrittlement Lead causes embrittlement in all nickel-base alloys in much the same manner as sulfur. Lead-containing drawing or threading lubricants must be removed prior to a heating operation. Welding must not be done adjacent to or over soft solder. "Buttering" of threads with a lead-containing anti-galling compound is to be avoided if the temperature of operation will exceed 400 F or if seal welding is done.

UNALLOYED TITANIUM

(a) Heat treatment, although not mandatory after welding, is recommended after forming operations. Heat treatment shall be done in a furnace and at a metal temperature not less than 900 F or more than 1200 F, with time at temperature not to exceed one hour. The stress-relieving heat treatment usually recommended for unalloyed titanium is 1000 F to 1100 F for ½ hour. Prolonged exposures at temperatures above 1100 F result in heavier surface films that are not satisfactorily removed by acid pickling, but require descaling treatment for their removal.

(b) In certain environments associated with pickling and annealing, as well as under actual operating conditions, absorption of hydrogen with resultant embrittling of the unalloyed titanium, or surface hydriding with loss of effective structural material, may occur. Scaling may result from excessive annealing time and temperatures in oxidizing environments, and reducing furnace atmospheres shall not be used. Suitable procedures

[1] Army-Navy Aeronatucial Specification AN-C-53 Amend. I may be obtained from Sup't of Documents, U.S. Printing Office.

TABLE NF-4

TEMPERATURE RANGE FOR HOT-WORKING NONFERROUS MATERIALS

Material	ASME Spec. No.	Temperature Range, °F For Light Work	For Heavy Work
Al Alloy 1060 } 1100 }	SB-209	300–500	500–850
3003	SB-209	400–600	600–900
3004	SB-209	400–600	600–850
5052	SB-209	400–600	600–850
6061[1]	SB-209	400–600	600–900
6061[2]	SB-209	300–350	350–400
Copper, Deoxidized	SB-11 & 111	1400	1600
Red Brass	SB-43 & 111	1450	1650
Admiralty	SB-111 & 171	1200	1450
Aluminum Brass	SB-111	1400	1600
Naval Brass	SB-171	1200	1500
Muntz Metal	SB-171	1150	1450
30% Cupro Nickel	SB-111 & 171	1700	2000
20% Cupro Nickel	SB-111	1600	1900
10% Cupro Nickel	SB-111	1400	1800
Copper Silicon (A, C, D)	SB-96	1300	1600
Copper Silicon (B)	SB-98	1300	1600
Aluminum Bronze (D)	SB-171	1400–1600	1500–1700
Aluminum Bronze (E)	SB-171	1450	1600
Nickel and Low-Carbon Nickel	SB-162	1000–1200	1200–2300
Nickel Copper	SB-127	1200–1700	1700–2150
Ni-Cr-Fe	SB-168	1600–1850	1850–2300
Nickel-Iron-Chromium	SB-409	1600–1850	1850–2200
Unalloyed Titanium	SB-265	–	600 Max.

[1] Annealed and as-rolled tempers.
[2] T5 and T6 tempers.

are available from the manufacturers and other sources to minimize scaling or hydrogen pickup during the various steps associated with fabrication.

(c) Service environments should be considered from the standpoints of potential embrittlement, hydriding, oxide scaling, and rapid oxidation, particularly environments containing free oxygen gas.

Molten or very hot unalloyed titanium reacts readily with air. Contamination during welding by oxygen and nitrogen increases the weld-metal hardness and decreases the ductility and notch toughness. An increase in weld-metal hardness (in comparison with parent-metal hardness) of more than about 40 VHN is indicative of possible excessive contamination. Substantial increases in hardness above this amount necessitates removal of the affected weld-metal area.

Special precautions should be taken to insure complete inert-gas shielding of the weld metal pool, the weld face, the back side of the weld, and the adjacent heat-affected base metal surfaces. Close supervision and inspection throughout the welding operation, as well as inspection of the weld face after the completion of each pass, prior to brushing or cleaning, is desirable.

It is recommended that the appendix of Specification SB-382 be used as a guide.

TABLE NF-5

LIMITING SERVICE TEMPERATURE, °F

Material	ASME Spec. No.	Sulfur-Free Atmospheres: Oxidizing	Reducing H_2	Reducing CO	Sulfurous Atmospheres: Steam	Oxidizing	Reducing
Nickel	SB-162	1900	2300	2300	800	600	500
Ni-Cu	SB-127	1000	2000	1500	700	600	500
Ni-Cr-Fe	SB-168	2000	2100	2100	1500	1500	1000
Nickel-Iron-Chromium	SB-409	2000	2300	2100	1800	1500	1000

Part UHA
Requirements for Pressure Vessels Constructed of High-Alloy Steel

GENERAL

UHA-1 Scope

The rules in Part UHA are applicable to pressure vessels and vessel parts that are constructed of high-alloy steel and shall be used in conjunction with the general requirements in Subsection A, and with the specific requirements in Subsection B that pertain to the method of fabrication used.

UHA-5 Uses

Some of the uses of high-alloy steel are to resist corrosion, to avoid contamination of contents with iron, to facilitate cleaning of vessels for processing foods, to provide strength or scaling-resistance at high temperatures, and to provide impact-resistance at low temperatures.

UHA-6 Conditions of Service

Specific chemical compositions, heat-treatment procedures, fabrication requirements, and supplementary tests may be required to assure that the vessel will be in its most favorable condition for the intended service. This is particularly true for vessels subject to severe corrosion. These rules do not indicate the selection of an alloy suitable for the intended service or the amount of the corrosion allowance to be provided.

It is recommended that users assure themselves by appropriate tests, or otherwise, that the high-alloy steel selected and its heat-treatment during fabrication will be suitable for the intended service both with respect to corrosion resistance and to retention of satisfactory mechanical properties during the desired service life. (See Appendix HA, *Suggestions on the Selection and Treatment of Austenitic Chromium-Nickel Steels.)*

UHA-8

(a) Approved specifications for castings of high alloy steel are given in Table UHA-23 together with a tabulation of allowable stress values at different temperatures. These stress values are to be multiplied by the casting quality factors of Par. UG-24. Castings that are to be welded shall be of weldable grade.

(b) Cast high alloy steel flanges and fittings complying with USAS B16.5-1961 shall be used within the ratings assigned in these standards.

MATERIALS

UHA-11 General

(a) All materials subject to stress due to pressure shall conform to one of the specifications given in Section II of the Code, and shall be limited to those listed in Table UHA-23 except as otherwise provided in (b) and (c) and in Pars. UG-10 and UG-11.

(b) When the desired type of approved stainless steel is lacking in the specification covering the applicable form (tubing, casting, etc.), the material may be furnished to the general requirements of an approved specification with the chemical and mechanical properties conforming to those shown in another approved specification for the desired grade.

(c) Columbium or columbium plus tantalum may be added to Types 309, 310 and 316 material in an amount not less than 9 times the carbon content and not greater than 1.0 per cent. These materials are designated Types 309Cb, 310Cb and 316Cb, respectively, in these rules. (See Par. UHA-106 for a suggested restricted composition for Type 316Cb.) The maximum allowable stress values for materials with columbium or columbium plus tantalum added shall be the same as given in Table UHA-23 for Types 309, 310 and 316, respectively.

(d) The specifications listed in Table UHA-23 do not use a uniform system for designating the grade number of materials that have approximately the same range of chemical composition. To supply such a uniform system of reference, Table UHA-23 gives opposite each grade the AISI type number which has approximately the same range of chemical composition. These type numbers are used in the rules of Part UHA whenever reference is made to materials of approximately the same chemical composition that are furnished under more than one approved specification or in more than one product-form.

DESIGN

UHA-20 General

(a) The rules in the following paragraphs apply specifically to the design of pressure ves-

TABLE UHA-23 MAXIMUM ALLOWABLE STRESS VALUES IN TENSION FOR HIGH-ALLOY STEEL, IN POUNDS PER SQUARE INCH

(See Par. UW-12(c) for vessels constructed under Part UW that include welded joints that are neither fully radiographed nor spot radiographically examined)

Material and Specification Number	Type or Grade	Nominal Composition	P-Number	Spec Min Tensile	Notes	For Metal Temperatures Not Exceeding Deg F: -20 to 100	200	300	400	500	600	650	700
PLATE STEELS													
SA-240	302	18Cr-8Ni	8	75000	(1)	18750	16550	15550	14950	14550	14350	14300	14200
SA-240	302	18Cr-8Ni	8	75000	...	18750	16000	13750	12250	11400	10800	10650	10500
SA-240	304	18Cr-8Ni	8	75000	(1) (10) (14)	18750	16550	15500	14950	14550	14350	14300	14200
SA-240	304	18Cr-8Ni	8	75000	(10) (14)	18750	16000	13750	12250	11400	10800	10650	10500
SA-240	304L	18Cr-8Ni	8	70000	(1)	17500	17000	16000	15000	14000	13000	12500	12000
SA-240	304L	18Cr-8Ni	8	70000	...	17500	15300	13100	11000	9700	9000	8750	8500
SA-240	309S	23Cr-12Ni	8	75000	(1) (10)	18750	17200	16400	15850	15500	15300	15200	15100
SA-240	309S	23Cr-12Ni	8	75000	(10)	18750	16900	15850	14900	14100	13350	13050	12700
SA-240	310S	25Cr-20Ni	8	75000	(1) (2) (10)	18750	17200	16400	15850	15500	15300	15200	15100
SA-240	310S	25Cr-20Ni	8	75000	(2) (10)	18750	16900	15850	14900	14100	13350	13050	12700
SA-240	310S	25Cr-20Ni	8	75000	(1) (3) (10)	18750	17200	16400	15850	15500	15300	15200	15100
SA-240	310S	25Cr-20Ni	8	75000	(3) (10)	18750	16900	15850	14900	14100	13350	13050	12700
SA-240	316	18Cr-12Ni-2Mo	8	75000	(1) (10) (14)	18750	17500	16900	16300	16000	16000	16000	16000
SA-240	316	18Cr-12Ni-2Mo	8	75000	(10) (14)	18750	16100	14600	13500	12600	11900	11600	11300
SA-240	316L	18Cr-10Ni-2Mo	8	70000	(1)	17500	17500	15800	14750	14000	13600	13450	13250
SA-240	316L	18Cr-10Ni-2Mo	8	70000	...	17500	16250	14500	12000	11000	10150	9800	9450
SA-240	317	19Cr-13Ni-3Mo	8	75000	(1) (10) (14)	18750	17500	16900	16300	16000	16000	16000	16000
SA-240	317	19Cr-13Ni-3Mo	8	75000	(10) (14)	18750	16100	14600	13500	12600	11900	11600	11300
SA-240	317L	19Cr-13Ni-3Mo	8	75000	(1)	17500	17500	15800	14750	14000	13600	13450	13250
SA-240	317L	19Cr-13Ni-3Mo	8	75000	...	17500	16250	14500	12000	11000	10150	9800	9450
SA-240	321	18Cr-10Ni-Ti	8	75000	(1) (10) (13)	18750	16800	15850	15300	15100	15100	15100	15100
SA-240	321	18Cr-10Ni-Ti	8	75000	(10) (13)	18750	16550	15300	14450	13500	12800	12500	12200
SA-240	347	18Cr-10Ni-Cb	8	75000	(1) (10) (13)	18750	16800	15850	15400	15100	15100	15100	15100
SA-240	347	18Cr-10Ni-Cb	8	75000	(10) (13)	18750	16550	15300	14450	13500	12800	12500	12200
SA-240	348	18Cr-10NI-Cb	8	75000	(1) (10) (13)	18750	16800	15850	15400	15100	15100	15100	15100
SA-240	348	18Cr-10Ni-Cb	8	75000	(10) (13)	18750	16550	15300	14450	13500	12800	12500	12200
SA-240	405	12Cr-Al	7	60000	...	15000	14300	13800	13300	12850	12400	12250	12050
SA-240	410	13Cr	6	65000	...	16250	15450	14950	14400	13900	13450	13250	13100
SA-240	410S	13Cr	7	60000	...	15000	14300	13800	13300	12850	12400	12250	12050
SA-240	430A	15Cr	6	65000	...	16250	15450	14950	14400	13900	13450	13250	13100
SA-240	430B	17Cr	7	65000	...	16250	15450	14950	14400	13900	13450	13250	13100
PIPES & TUBES													
Seamless													
SA-213	TP304	18Cr-8Ni	8	75000	(1) (10) (14)	18750	16550	15550	14950	14550	14350	14300	14200
SA-213	TP304	18Cr-8Ni	8	75000	(10) (14)	18750	16000	13750	12250	11400	10800	10650	10500
SA-213	TP304H	18Cr-8Ni	8	75000	(1)	18750	16550	15550	14950	14550	14350	14300	14200
SA-213	TP304H	18Cr-8Ni	8	75000	...	18750	16000	13750	12250	11400	10800	10650	10500
SA-213	TP304L	18Cr-8Ni	8	70000	(1)	17500	17000	16000	15000	14000	13000	12500	12000
SA-213	TP304L	18Cr-8Ni	8	70000	...	17500	15300	13100	11000	9700	9000	8750	8500
SA-213	TP310	25Cr-20Ni	8	75000	(1) (2) (10)	18750	17200	16400	15850	15500	15300	15200	15100
SA-213	TP310	25Cr-20Ni	8	75000	(2) (10)	18750	16900	15850	14900	14100	13350	13050	12700
SA-213	TP310	25Cr-20Ni	8	75000	(1) (3) (10)	18750	17200	16400	15850	15500	15300	15200	15100
SA-213	TP310	25Cr-20Ni	8	75000	(3) (10)	18750	16900	15850	14900	14100	13350	13050	12700
SA-213	TP316	18Cr-12Ni-2Mo	8	75000	(1) (10) (14)	18750	17500	16900	16300	16000	16000	16000	16000
SA-213	TP316	18Cr-12Ni-2Mo	8	75000	(10) (14)	18750	16100	14600	13500	12600	11900	11600	11300
SA-213	TP316H	18Cr-12Ni-2Mo	8	75000	(1)	18750	17500	16900	16300	16000	16000	16000	16000
SA-213	TP316H	18Cr-12Ni-2Mo	8	75000	...	18750	16100	14600	13500	12600	11900	11600	11300
SA-213	TP316L	18Cr-12Ni-2Mo	8	70000	(1)	17500	17500	15800	14750	14000	13600	13450	13250
SA-213	TP316L	18Cr-12Ni-2Mo	8	70000	...	17500	16250	14500	12000	11000	10150	9800	9450
SA-213	TP321	18Cr-10Ni-Ti	8	75000	(1)	18750	16800	15850	15400	15100	15100	15100	15100
SA-213	TP321	18Cr-10Ni-Ti	8	75000	...	18750	16550	15300	14450	13500	12800	12500	12200
SA-213	TP321H	18Cr-10Ni-Ti	8	75000	(1)	18750	16800	15850	15400	15100	15100	15100	15100
SA-213	TP321H	18Cr-10Ni-Ti	8	75000	...	18750	16550	15300	14450	13500	12800	12500	12200
SA-213	TP347	18Cr-10Ni-Cb	8	75000	(1)	18750	16800	15850	15400	15100	15100	15100	15100
SA-213	TP347	18Cr-10Ni-Cb	8	75000	...	18750	16550	15300	14450	13500	12800	12500	12200
SA-213	TP347H	18Cr-10Ni-Cb	8	75000	(1)	18750	16800	15850	15400	15100	15100	15100	15100
SA-213	TP347H	18Cr-10Ni-Cb	8	75000	...	18750	16550	15300	14450	13500	12800	12500	12200
SA-213	TP348	18Cr-10Ni-Cb	8	75000	(1)	18750	16800	15850	15400	15100	15100	15100	15100
SA-213	TP348	18Cr-10Ni-Cb	8	75000	...	18750	16550	15300	14450	13500	12800	12500	12200
SA-213	TP348H	18Cr-10Ni-Cb	8	75000	(1)	18750	16800	15850	15400	15100	15100	15100	15100
SA-213	TP348H	18Cr-10Ni-Cb	8	75000	...	18750	16550	15300	14450	13500	12800	12500	12200
SA-268	TP405	12Cr-Al	7	60000	...	15000	14300	13800	13300	12850	12400	12250	12050
SA-268	TP410	13Cr	6	60000	...	15000	14300	13800	13300	12850	12400	12250	12050
SA-268	TP430	16Cr	7	60000	(9)	15000	14300	13800	13300	12850	12400	12250	12050
SA-268	TP446	27Cr	10	70000	(10E)	17500	16650	16100	15550	15000	14500	14300	...

TABLE UHA-23 MAXIMUM ALLOWABLE STRESS VALUES IN TENSION FOR HIGH-ALLOY STEEL, IN POUNDS PER SQUARE INCH

(See Par. UW-12(c) for vessels constructed under Part UW that include welded joints that are neither fully radiographed nor spot radiographically examined)

For Metal Temperatures Not Exceeding Deg F: 750	800	850	900	950	1000	1050	1100	1150	1200	1250	1300	1350	1400	1450	1500	Material and Specification Number	Type or Grade
																PLATE STEELS	
14100	...	...	...	...	...	...	...	...	...	...	...	...	...	...	...	SA-240	302
10400	...	...	...	...	...	...	...	...	...	...	...	...	...	...	...	SA-240	302
14100	14000	13850	13600	13400	12500	11100	8700	6900	5500	4350	3400	2600	2050	1600	1250	SA-240	304
10400	10250	10150	10000	9750	9450	9000	8250	6900	5500	4350	3400	2600	2050	1600	1250	SA-240	304
11500	11000	...	...	...	...	...	...	...	...	...	...	...	...	...	...	SA-240	304L
8300	8100	...	...	...	...	...	...	...	...	...	...	...	...	...	...	SA-240	304L
15000	14900	14600	13850	12500	10500	8500	6500	5000	3800	2900	2300	1750	1300	900	750	SA-240	309S
12500	12150	11900	11650	11150	10150	8500	6500	5000	3800	2900	2300	1750	1300	900	750	SA-240	309S
15000	14900	14600	13850	12500	11000	9750	8500	7250	6000	4750	3500	2350	1600	1100	750	SA-240	310S
12500	12150	11900	11650	11350	10800	9750	8500	7250	6000	4750	3500	2350	1600	1100	750	SA-240	310S
15000	14900	14600	13850	12500	11000	7100	5000	3600	2500	1450	750	450	350	250	200	SA-240	310S
12500	12150	11900	11650	11350	10800	9750	8500	7250	6000	4750	3500	2350	1600	1100	750	SA-240	310S
15000	14900	14600	13850	12500	11000	7100	5000	3600	2500	1450	750	450	350	250	200	SA-240	310S
12500	12150	11900	11650	11100	9850	7100	5000	3600	2500	1450	750	450	350	250	200	SA-240	316
15850	15550	15250	14850	14550	14000	13300	12000	9500	6950	5300	4000	2700	2000	1500	1150	SA-240	316
11000	10800	10600	10300	10100	9800	9650	9450	8650	6950	5300	4000	2700	2000	1500	1150	SA-240	316L
13000	12700	12250	...	...	...	...	...	...	...	...	...	...	...	...	...	SA-240	316L
9100	8800	8500	...	...	...	...	...	...	...	...	...	...	...	...	...	SA-240	317
15850	15550	15250	14850	14550	14000	13300	12000	9500	6950	5300	4000	2700	2000	1500	150	SA-240	317
11000	10800	10600	10300	10100	9800	9650	9450	8650	6950	5300	4000	2700	2000	1500	150	SA-240	317L
13000	12700	12250	...	...	...	...	...	...	...	...	...	...	...	...	...	SA-240	317L
9100	8800	8500	...	...	...	...	...	...	...	...	...	...	...	...	...	SA-240	321
15100	15100	15000	14900	14800	14000	12100	9100	6100	4400	3300	2200	1500	1200	900	750	SA-240	321
12000	11900	11600	11300	11200	11000	10650	9100	6100	4400	3300	2200	1500	1200	900	750		
15100	15100	15000	14900	14800	14000	12100	9100	6100	4400	3300	2200	1500	1200	900	750	SA-240	347
12000	11900	11600	11300	11200	11000	10650	9100	6100	4400	3300	2200	1500	1200	900	750	SA-240	347
15100	15100	15000	14900	14800	14000	12100	9100	6100	4400	3300	2200	1500	1200	900	750	SA-240	348
12000	11900	11600	11300	11200	11000	10650	9100	6100	4400	3300	2200	1500	1200	900	750	SA-240	348
11650	11100	10400	9650	8400	4000	...	...	...	...	...	...	...	...	...	...	SA-240	405
12650	12000	11250	10450	8800	6400	4400	2900	1750	1000	...	...	...	...	...	...	SA-240	410
11650	11100	10400	9650	8400	6400	4400	2900	1750	1000	...	...	...	...	...	...	SA-240	410S
12650	12000	11250	10450	9200	6500	4500	3200	2400	1750	...	...	...	...	...	...	SA-240	430A
12650	12000	11250	10450	9200	6500	4500	3200	2400	1750	...	...	...	...	...	...	SA-240	430B
																PIPES & TUBES	
																Seamless	
14100	14000	13850	13600	13400	12500	11100	8700	6900	5500	4350	3400	2600	2050	1600	1250	SA-213	TP304
10400	10250	10150	10000	9750	9450	9000	8250	6900	5500	4350	3400	2600	2050	1600	1250	SA-213	TP304
14100	14000	13850	13600	13400	12500	11100	8700	6900	5500	4350	3400	2600	2050	1600	1250	SA-213	TP304H
10400	10250	10150	10000	9750	9450	9000	8250	6900	5500	4350	3400	2600	2050	1600	1250	SA-213	TP304H
11500	11000	...	...	...	...	...	...	...	...	...	...	...	...	...	...	SA-213	TP304L
8300	8100	...	...	...	...	...	...	...	...	...	...	...	...	...	...	SA-213	TP304L
15000	14900	14600	13850	12500	11000	9750	8500	7250	6000	4750	3500	2350	1600	1100	750	SA-213	TP310
12500	12150	11900	11650	11350	10800	9750	8500	7250	6000	4750	3500	2350	1600	1100	750	SA-213	TP310
15000	14900	14600	13850	12500	11000	7100	5000	3600	2500	1450	750	450	350	250	200	SA-213	TP310
12500	12150	11900	11650	11100	9850	7100	5000	3600	2500	1450	750	450	350	250	200		
15850	15550	15250	14850	14550	14000	13300	12000	9500	6950	5300	4000	2700	2000	1500	1150	SA-213	TP316
11000	10800	10600	10300	10100	9800	9650	9450	8650	6950	5300	4000	2700	2000	1500	1150	SA-213	TP316H
15850	15550	15250	14850	14550	14000	13300	12000	9500	6950	5300	4000	2700	2000	1500	1150	SA-213	TP316H
11000	10800	10600	10300	10100	9800	9650	9450	8650	6950	5300	4000	2700	2000	1500	1150	SA-213	TP316L
13000	12700	12250	...	...	...	...	...	...	...	...	...	...	...	...	...		
9100	8800	8500	...	...	...	...	...	...	...	...	...	...	...	...	...	SA-213	TP316L
15100	15100	15000	14900	14800	14000	12100	9100	6100	4400	3300	2200	1500	1200	900	750	SA-213	TP321
12000	11900	11600	11300	11200	11000	10650	9100	6100	4400	3300	2200	1500	1200	900	750	SA-213	TP321
15100	15100	15000	14900	14800	14500	13700	10500	7700	5500	4100	3000	2200	1600	1100	750	SA-213	TP321H
12000	11900	11600	11300	11200	11000	10800	10000	7700	5500	4100	3000	2200	1600	1100	750		
15100	15100	15000	14900	14800	14000	12100	9100	6100	4400	3300	2200	1500	1200	900	750	SA-213	TP347
12000	11900	11600	11300	11200	11000	10650	9100	6100	4400	3300	2200	1500	1200	900	750	SA-213	TP347
15100	15100	15000	14900	14800	14500	13900	12000	8500	6000	4500	3300	2400	1800	1350	1050	SA-213	TP347H
12000	11900	11600	11300	11200	11000	10800	10300	8500	6000	4500	3300	2400	1800	1350	1050	SA-213	TP347H
15100	15100	15000	14900	14800	14000	12100	9100	6100	4400	3300	2200	1500	1200	900	750	SA-213	TP348
12000	11900	11600	11300	11200	11000	10650	9100	6100	4400	3300	2200	1500	1200	900	750		
15100	15100	15000	14900	14800	14500	13900	12000	8500	6000	4500	3300	2400	1800	1350	1050	SA-213	TP348H
12000	11900	11600	11300	11200	11000	10800	10300	8500	6000	4500	3300	2400	1800	1350	1050	SA-213	TP348H
11650	11100	10400	9650	8400	4000	...	...	...	...	...	...	...	...	...	...	SA-268	TP405
11650	11100	10400	9650	8400	6400	4400	2900	1750	1000	...	...	...	...	...	...	SA-268	TP410
11650	11100	10400	9650	8500	6500	4500	3200	2400	1750	...	...	...	...	...	...	SA-268	TP430
...	...	...	...	...	...	...	...	...	...	...	...	...	...	...	...	SA-268	TP446

TABLE UHA-23 MAXIMUM ALLOWABLE STRESS VALUES IN TENSION FOR HIGH-ALLOY STEEL, IN POUNDS PER SQUARE INCH (Continued)

(See Par. UW-12(c) for vessels constructed under Part UW that include welded joints that are neither fully radiographed nor spot radiographically examined)

Material and Specification Number	Type or Grade	Nominal Composition	P-Number	Spec Min Tensile	Notes	For Metal Temperatures Not Exceeding Deg F: −20 to 100	200	300	400	500	600	650	700
PIPE & TUBES													
Seamless (Cont.)													
SA-312	TP304	18Cr-8Ni	8	75000	(1) (10) (14)	18750	16550	15550	14950	14550	14350	14300	14200
SA-312	TP304	18Cr-8Ni	8	75000	(10) (14)	18750	16000	13750	12250	11400	10800	10650	10500
SA-312	TP304H	18Cr-8Ni	8	75000	(1)	18750	16550	15550	14950	14550	14350	14300	14200
SA-312	TP304H	18Cr-8Ni	8	75000	...	18750	16000	13750	12250	11400	10800	10550	10500
SA-312	TP304L	18Cr-8Ni	8	70000	(1)	17500	17000	16000	15000	14000	13000	12500	12000
SA-312	TP304L	18Cr-8Ni	8	70000	...	17500	15300	13100	11000	9700	9000	8750	8500
SA-312	TP309	23Cr-12Ni	8	75000	(1) (10)	18750	17200	16400	15850	15500	15300	15200	15100
SA-312	TP309	23Cr-12Ni	8	75000	(10)	18750	16900	15850	14900	14100	13350	13050	12700
SA-312	TP310	25Cr-20Ni	8	75000	(1) (2) (10)	18750	17200	16400	15850	15500	15300	15200	15100
SA-312	TP310	25Cr-20Ni	8	75000	(2) (10)	18750	16900	15850	14900	14100	13350	13050	12700
SA-312	TP310	25Cr-20Ni	8	75000	(1) (3) (10)	18750	17200	16400	15850	15500	15300	15200	15100
SA-312	TP310	25Cr-20Ni	8	75000	(3) (10)	18750	16900	15850	14900	14100	13350	13050	12700
SA-312	TP316	18Cr-12Ni-2Mo	8	75000	(1) (10) (14)	18750	17500	16900	16300	16000	16000	16000	16000
SA-312	TP316	18Cr-12Ni-2Mo	8	75000	(10) (14)	18750	16100	14600	13500	12600	11900	11600	11300
SA-312	TP316H	18Cr-12Ni-2Mo	8	75000	(1)	18750	17500	16900	16300	16000	16000	16000	16000
SA-312	TP316H	18Cr-12Ni-2Mo	8	75000	...	18750	16100	14600	13500	12600	11900	11600	11300
SA-312	TP316L	18Cr-12Ni-2Mo	8	70000	(1)	17500	17500	15800	14750	14000	13600	13450	13250
SA-312	TP316L	18Cr-12Ni-2Mo	8	70000	...	17500	16250	14500	12000	11000	10150	9800	9450
SA-312	TP317	19Cr-13Ni-3Mo	8	75000	(1) (10) (14)	18750	17500	16900	16300	16000	16000	16000	16000
SA-312	TP317	19Cr-13Ni-3Mo	8	75000	(10) (14)	18750	16100	14600	13500	12600	11900	11600	11300
SA-312	TP321	18Cr-10Ni-Ti	8	75000	(1)	18750	16800	15850	15400	15100	15100	15100	15100
SA-312	TP321	18Cr-10Ni-Ti	8	75000	...	18750	16550	15300	14450	13500	12800	12500	12200
SA-312	TP321H	18Cr-10Ni-Ti	8	75000	(1)	18750	16800	15850	15400	15100	15100	15100	15100
SA-312	TP321H	18Cr-10Ni-Ti	8	75000	...	18750	16550	15300	14450	13500	12800	12500	12200
SA-312	TP347	18Cr-10Ni-Cb	8	75000	(1)	18750	16800	15850	15400	15100	15100	15100	15100
SA-312	TP347	18Cr-10Ni-Cb	8	75000	...	18750	16550	15300	14450	13500	12800	12500	12200
SA-312	TP347H	18Cr-10Ni-Cb	8	75000	(1)	18750	16800	15850	15400	15100	15100	15100	15100
SA-312	TP347H	18Cr-10Ni-Cb	8	75000	...	18750	16550	15300	14450	13500	12800	12500	12200
SA-312	TP348	18Cr-10Ni-Cb	8	75000	(1)	18750	16800	15850	15400	15100	15100	15100	15100
SA-312	TP348	18Cr-10Ni-Cb	8	75000	...	18750	16550	15300	14450	13500	12800	12500	12200
SA-312	TP348H	18Cr-10Ni-Cb	8	75000	(1)	18750	16800	15850	15400	15100	15100	15100	15100
SA-312	TP348H	18Cr-10Ni-Cb	8	75000	...	18750	16550	15300	14450	13500	12800	12500	12200
SA-376	TP304	18Cr-8Ni	8	75000	(1) (10) (14)	18750	16550	15550	14950	14550	14350	14300	14200
SA-376	TP304	18Cr-8Ni	8	75000	(10) (14)	18750	16000	13750	12250	11400	10800	10650	10500
SA-376	TP304H	18Cr-8Ni	8	75000	(1)	18750	16550	15550	14950	14550	14350	14300	14200
SA-376	TP304H	18Cr-8Ni	8	75000	...	18750	16000	13750	12250	11400	10800	10650	10500
SA-376	TP316	18Cr-12Ni-2Mo	8	75000	(1) (10) (14)	18750	17500	16900	16300	16000	16000	16000	16000
SA-376	TP316	18Cr-12Ni-2Mo	8	75000	(10) (14)	18750	16100	14600	13500	12600	11900	11600	11300
SA-376	TP316H	18Cr-12Ni-2Mo	8	75000	(1)	18750	17500	16900	16300	16000	16000	16000	16000
SA-376	TP316H	18Cr-12Ni-2Mo	8	75000	...	18750	16100	14600	13500	12600	11900	11600	11300
SA-376	TP321	18Cr-10Ni-Ti	8	75000	(1)	18750	16800	15850	15400	15100	15100	15100	15100
SA-376	TP321	18Cr-10Ni-Ti	8	75000	...	18750	16550	15300	14450	13500	12800	12500	12200
SA-376	TP321H	18Cr-10Ni-Ti	8	75000	(1)	18750	16800	15850	15400	15100	15100	15100	15100
SA-376	TP321H	18Cr-10Ni-Ti	8	75000	...	18750	16550	15300	14450	13500	12800	12500	12200
SA-376	TP347	18Cr-10Ni-Cb	8	75000	(1)	18750	16800	15850	15400	15100	15100	15100	15100
SA-376	TP347	18Cr-10Ni-Cb	8	75000	...	18750	16550	15300	14450	13500	12800	12500	12200
SA-376	TP347H	18Cr-10Ni-Cb	8	75000	(1)	18750	16800	15850	15400	15100	15100	15100	15100
SA-376	TP347H	18Cr-10Ni-Cb	8	75000	...	18750	16550	15300	14450	13500	12800	12500	12200
SA-376	TP348	18Cr-10Ni-Cb	8	75000	(1)	18750	16800	15850	15400	15100	15100	15100	15100
SA-376	TP348	18Cr-10Ni-Cb	8	75000	...	18750	16550	15300	14450	13500	12800	12500	12200
SA-376	TP348H	18Cr-10Ni-Cb	8	75000	(1)	18750	16800	15850	15400	15100	15100	15100	15100
SA-376	TP348H	18Cr-10Ni-Cb	8	75000	...	18750	16550	15300	14450	13500	12800	12500	12200
SA-430	FP304	18Cr-8Ni	8	70000	(1) (10) (14)	17500	15450	14500	13950	13550	13350	13300	13250
SA-430	FP304	18Cr-8Ni	8	70000	(10) (14)	17500	15450	13750	12250	11400	10800	10650	10500
SA-430	FP304H	18Cr-8Ni	8	70000	(1)	17500	15450	14500	13950	13550	13350	13300	13250
SA-430	FP304H	18Cr-8Ni	8	70000	...	17500	15450	13750	12250	11400	10800	10650	10500
SA-430	FP316	18Cr-12Ni-2Mo	8	70000	(1) (10) (14)	17500	16350	15750	15200	14950	14950	14950	14950
SA-430	FP316	18Cr-12Ni-2Mo	8	70000	(10) (14)	17500	16100	14600	13500	12600	11900	11600	11300
SA-430	FP316H	18Cr-12Ni-2Mo	8	70000	(1)	17500	16350	15750	15200	14950	14950	14950	14950
SA-430	FP316H	18Cr-12Ni-2Mo	8	70000	...	17500	16100	14600	13500	12600	11900	11600	11300
SA-430	FP321	18Cr-10Ni-Ti	8	70000	(1)	17500	15700	14800	14350	14100	14100	14100	14100
SA-430	FP321	18Cr-10Ni-Ti	8	70000	...	17500	15700	14800	14350	13500	12800	12500	12200

TABLE UHA-23 MAXIMUM ALLOWABLE STRESS VALUES IN TENSION FOR HIGH-ALLOY STEEL, IN POUNDS PER SQUARE INCH (Continued)

(See Par. UW-12(c) for vessels constructed under Part UW that include welded joints that are neither fully radiographed nor spot radiographically examined)

For Metal Temperatures Not Exceeding Deg F: 750	800	850	900	950	1000	1050	1100	1150	1200	1250	1300	1350	1400	1450	1500	Material and Specification Number	Type or Grade
																PIPE & TUBES	
																Seamless (Cont.)	
14100	14000	13850	13600	13400	12500	11100	8700	6900	5500	4350	3400	2600	2050	1600	1250	SA-312	TP304
10400	10250	10150	10000	9750	9450	9000	8250	6900	5500	4350	3400	2600	2050	1600	1250	SA-312	TP304
14100	14000	13850	13600	13400	12500	11100	8700	6900	5500	4350	3400	2600	2050	1600	1250	SA-312	TP304H
10400	10250	10150	10000	9750	9450	9000	8250	6900	5500	4350	3400	2600	2050	1600	1250	SA-312	TP304H
11500	11000	...	...	...	...	...	...	...	...	...	...	...	...	...	...	SA-312	TP304L
8300	8100	...	...	...	...	...	...	...	...	...	...	...	...	...	...	SA-312	TP304L
15000	14900	14600	13850	12500	10500	8500	6500	5000	3800	2900	2300	1750	1300	900	750	SA-312	TP309
12500	12150	11900	11650	11150	10150	8800	6500	5000	3800	2900	2300	1750	1300	900	750	SA-312	TP309
15000	14900	14600	13850	12500	11000	9750	8500	7250	6000	4750	3500	2350	1600	1100	750	SA-312	TP310
12500	12150	11900	11650	11350	10800	9750	8500	7250	6000	4750	3500	2350	1600	1100	750	SA-312	TP310
15000	14900	14600	13850	12500	11000	7100	5000	3600	2500	1450	750	450	350	250	200	SA-312	TP310
12500	12150	11900	11650	11100	9850	7100	5000	3600	2500	1450	750	450	350	250	200	SA-312	TP310
15850	15550	15250	14850	14550	14000	13300	12000	9500	6950	5300	4000	2700	2000	1500	1150	SA-312	TP316
11000	10800	10600	10300	10100	9800	9650	9450	8650	6950	5300	4000	2700	2000	1500	1150	SA-312	TP316
15850	15550	15250	14850	14550	14000	13300	12000	9500	6950	5300	4000	2700	2000	1500	1150	SA-312	TP316H
11000	10800	10600	10300	10100	9800	9650	9450	8650	6950	5300	4000	2700	2000	1500	1150	SA-312	TP316H
13000	12700	12250	...	...	...	...	...	...	...	...	...	...	...	...	...	SA-312	TP316L
9100	8800	8500	...	...	...	...	...	...	...	...	...	...	...	...	...	SA-312	TP316L
15850	15550	15250	14850	14550	14000	13300	12000	9500	6950	5300	4000	2700	2000	1500	1150	SA-312	TP317
11000	10800	10600	10300	10100	9800	9650	9450	8650	6950	5300	4000	2700	2000	1500	1150	SA-312	TP317
15100	15100	15000	14900	14800	14000	12100	9100	6100	4400	3300	2200	1500	1200	900	750	SA-312	TP321
12000	11900	11600	11300	11200	11000	10650	9100	6100	4400	3300	2200	1500	1200	900	750	SA-312	TP321
15100	15100	15000	14900	14800	14500	13700	10500	7700	5500	4100	3000	2200	1600	1100	750	SA-312	TP321H
12000	11900	11600	11300	11200	11000	10800	10000	7700	5500	4100	3000	2200	1600	1100	750	SA-312	TP321H
15100	15100	15000	14900	14800	14000	12100	9100	6100	4400	3300	2200	1500	1200	900	750	SA-312	TP347
12000	11900	11600	11300	11200	11000	10650	9100	6100	4400	3300	2200	1500	1200	900	750	SA-312	TP347
15100	15100	15000	14900	14800	14500	13900	12000	8500	6000	4500	3300	2400	1800	1350	1050	SA-312	TP347H
12000	11900	11600	11300	11200	11000	10800	10300	8500	6000	4500	3300	2400	1800	1350	1050	SA-312	TP347H
15100	15100	15000	14900	14800	14000	12100	9100	6100	4400	3300	2200	1500	1200	900	750	SA-312	TP348
12000	11900	11600	11300	11200	11000	10650	9100	6100	4400	3300	2200	1500	1200	900	750	SA-312	TP348
15100	15100	15000	14900	14800	14500	13900	12000	8500	6000	4500	3300	2400	1800	1350	1050	SA-312	TP348H
12000	11900	11600	11300	11200	11000	10800	10300	8500	6000	4500	3300	2400	1800	1350	1050	SA-312	TP348H
14100	14000	13850	13600	13400	12500	11100	8700	6900	5500	4350	3400	2600	2050	1600	1250	SA-376	TP304
10400	10250	10150	10000	9750	9450	9000	8250	6900	5500	4350	3400	2600	2050	1600	1250	SA-376	TP304
14100	14000	13850	13600	13400	12500	11100	8700	6900	5500	4350	3400	2600	2050	1600	1250	SA-376	TP304H
10400	10250	10150	10000	9750	9450	9000	8250	6900	5500	4350	3400	2600	2050	1600	1250	SA-376	TP304H
15850	15550	15250	14850	14550	14000	13300	12000	9500	6950	5300	4000	2700	2000	1500	1150	SA-376	TP316
11000	10800	10600	10300	10100	9800	9650	9450	8650	6950	5300	4000	2700	2000	1500	1150	SA-376	TP316
15850	15550	15250	14850	14550	14000	13300	12000	9500	6950	5300	4000	2700	2000	1500	1150	SA-376	TP316H
11000	10800	10600	10300	10100	9800	9650	9450	8650	6950	5300	4000	2700	2000	1500	1150	SA-376	TP316H
15100	15100	15000	14900	14800	14000	12100	9100	6100	4400	3300	2200	1500	1200	900	750	SA-376	TP321
12000	11900	11600	11300	11200	11000	10650	9100	6100	4400	3300	2200	1500	1200	900	750	SA-376	TP321
15100	15100	15000	14900	14800	14500	13700	10500	7700	5500	4100	3000	2200	1600	1100	750	SA-376	TP321H
12000	11900	11600	11300	11200	11000	10800	10000	7700	5500	4100	3000	2200	1600	1100	750	SA-376	TP321H
15100	15100	15000	14900	14800	14000	12100	9100	6100	4400	3300	2200	1500	1200	900	750	SA-376	TP347
12000	11900	11600	11300	11200	11000	10650	9100	6100	4400	3300	2200	1500	1200	900	750	SA-376	TP347
15100	15100	15000	14900	14800	14500	13900	12000	8500	6000	4500	3300	2400	1800	1350	1050	SA-376	TP347H
12000	11900	11600	11300	11200	11000	10800	10300	8500	6000	4500	3300	2400	1800	1350	1050	SA-376	TP347H
15100	15100	15000	14900	14800	14000	12100	9100	6100	4400	3300	2200	1500	1200	900	750	SA-376	TP348
12000	11900	11600	11300	11200	11000	10650	9100	6100	4400	3300	2200	1500	1200	900	750	SA-376	TP348
15100	15100	15000	14900	14800	14500	13900	12000	8500	6000	4500	3300	2400	1800	1350	1050	SA-376	TP348H
12000	11900	11600	11300	11200	11000	10800	10300	8500	6000	4500	3300	2400	1800	1350	1050	SA-376	TP348H
13150	13050	12900	12700	12400	11400	10700	8700	6900	5500	4350	3400	2600	2050	1600	1250	SA-430	FP304
10400	10350	10150	10000	9750	9450	9000	8250	6900	5500	4350	3400	2600	2050	1600	1250	SA-430	FP304
13150	13050	12900	12700	12400	11400	10700	8700	6900	5500	4350	3400	2600	2050	1600	1250	SA-430	FP304H
10400	10250	10150	10000	9750	9450	9000	8250	6900	5500	4350	3400	2600	2050	1600	1250	SA-430	FP304H
14950	14950	14750	14450	14000	13500	12700	11600	9500	6950	5300	4000	2700	2000	1500	1150	SA-430	FP316
11000	10800	10600	10300	10100	9800	9650	9450	8650	6950	5300	4000	2700	2000	1500	1150	SA-430	FP316
14950	14950	14750	14450	14000	13500	12700	11600	9500	6950	5300	4000	2700	2000	1500	1150	SA-430	FP316H
11000	10800	10600	10300	10100	9800	9650	9450	8650	6950	5300	4000	2700	2000	1500	1150	SA-430	FP316H
14100	14100	14000	13900	13800	13200	12000	9100	6100	4400	3300	2200	1500	1200	900	750	SA-430	FP321
12000	11900	11600	11300	11200	11000	10650	9100	6100	4400	3300	2200	1500	1200	900	750	SA-430	FP321

TABLE UHA-23 MAXIMUM ALLOWABLE STRESS VALUES IN TENSION FOR HIGH-ALLOY STEEL, IN POUNDS PER SQUARE INCH (Continued)

(See Par. UW-12 (c) for vessels constructed under Part UW that include welded joints that are neither fully radiographed nor spot radiographically examined)

Material and Specification Number	Type or Grade	Nominal Composition	P-Number	Spec Min Tensile	Notes	For Metal Temperatures Not Exceeding Deg F: −20 to 100	200	300	400	500	600	650	700
PIPE & TUBES													
Seamless (Cont.)													
SA-430	FP321H	18Cr-10Ni-Ti	8	70000	(1)	17500	15700	14800	14350	14100	14100	14100	14100
SA-430	FP321H	18Cr-10Ni-Ti	8	70000	...	17500	15700	14800	14350	13500	12800	12500	12200
SA-430	FP347	18Cr-10Ni-Cb	8	70000	(1)	17500	15700	14800	14350	14100	14100	14100	14100
SA-430	FP347	18Cr-10Ni-Cb	8	70000	...	17500	15700	14800	14350	13500	12800	12500	12200
SA-430	FP347H	18Cr-10Ni-Cb	8	70000	(1)	17500	15700	14800	14350	14100	14100	14100	14100
SA-430	FP347H	18Cr-10Ni-Cb	8	70000	...	17500	15700	14800	14350	13500	12800	12500	12200
SA-452	TP304H	18Cr-8Ni	8	75000	(1)	18750	17000	16000	15450	15100	14900	14850	14800
SA-452	TP304H	18Cr-8Ni	8	75000	...	18750	16650	15000	13650	12500	11600	11200	10800
SA-452	TP316H	16Cr-13Ni-3Mo	8	75000	...	18750	18750	17900	17500	17200	17100	17050	17000
SA-452	TP347H	18Cr-10Ni-Cb	8	75000	...	18750	16550	15300	14450	13500	12800	12500	12200
Welded													
SA-249	TP304	18Cr-8Ni	8	75000	(1) (4) (10) (14)	15950	14050	13200	12700	12350	12200	12150	12050
SA-249	TP304	18Cr-8Ni	8	75000	(4) (10) (14)	15950	13600	11700	10400	9700	9200	9050	8900
SA-249	TP304H	18Cr-8Ni	8	75000	(1) (4)	15950	14050	13200	12700	12350	12200	12150	12050
SA-249	TP304H	18Cr-8Ni	8	75000	(4)	15950	13600	11700	10400	9700	9200	9050	8900
SA-249	TP304L	18Cr-8Ni	8	70000	(1) (4)	14900	14500	13600	12750	11900	11050	10600	10200
SA-249	TP304L	18Cr-8Ni	8	70000	(4)	14900	13000	11150	9350	8250	7650	7450	7200
SA-249	TP309	23Cr-12Ni	8	75000	(1) (4) (10)	15950	14600	13950	13450	13150	13000	12900	12850
SA-249	TP309	23Cr-12Ni	8	75000	(4) (10)	15950	14350	13450	12650	12000	11350	11100	10800
SA-249	TP310	25Cr-20Ni	8	75000	(1) (2) (4) (10)	15950	14600	13950	13450	13150	13000	12900	12850
SA-249	TP310	25Cr-20Ni	8	75000	(2) (4) (10)	15950	14350	13450	12650	12000	11350	11100	10800
SA-249	TP310	25Cr-20Ni	8	75000	(1) (3) (4) (10)	15950	14600	13950	13450	13150	13000	12900	12850
SA-249	TP310	25Cr-20Ni	8	75000	(3) (4) (10)	15950	14350	13450	12650	12000	11350	11100	10800
SA-249	TP316	18Cr-12Ni-2Mo	8	75000	(1) (4) (10) (14)	15950	14850	14350	13850	13600	13600	13600	13600
SA-249	TP316	18Cr-12Ni-2Mo	8	75000	(4) (10) (14)	15950	13700	12400	11450	10700	10100	9850	9600
SA-249	TP316H	18Cr-12Ni-2Mo	8	75000	(1) (4)	15950	14850	14350	13850	13600	13600	13600	13600
SA-249	TP316H	18Cr-12Ni-2Mo	8	75000	(4)	15950	13700	12400	11450	10700	10100	9850	9600
SA-249	TP316L	18Cr-12Ni-2Mo	8	70000	(1) (4)	14900	14900	13450	12550	11900	11600	11400	11250
SA-249	TP316L	18Cr-12Ni-2Mo	8	70000	(4)	14900	13800	12300	10200	9350	8650	8350	8050
SA-249	TP317	19Cr-13Ni-3Mo	8	75000	(1) (4) (10) (14)	15950	14850	14350	13850	13600	13600	13600	13600
SA-249	TP317	19Cr-13Ni-3Mo	8	75000	(4) (10) (14)	15950	13700	12400	11450	10700	10100	9850	9600
SA-249	TP321	18Cr-10Ni-Ti	8	75000	(1) (4)	15950	14300	13450	13100	12850	12850	12850	12850
SA-249	TP321	18Cr-10Ni-Ti	8	75000	(4)	15950	14050	13000	12300	11450	10900	10600	10350
SA-249	TP321H	18Cr-10Ni-Ti	8	75000	(1) (4)	15950	14300	13450	13100	12850	12850	12850	12850
SA-249	TP321H	18Cr-10Ni-Ti	8	75000	(4)	15950	14050	13000	12300	11450	10900	10600	10350
SA-249	TP347	18Cr-10Ni-Cb	8	75000	(1) (4)	15950	14300	13450	13100	12850	12850	12850	12850
SA-249	TP347	18Cr-10Ni-Cb	8	75000	(4)	15950	14050	13000	12300	11450	10900	10600	10350
SA-249	TP347H	18Cr-10Ni-Cb	8	75000	(1) (4)	15950	14300	13450	13100	12850	12850	12850	12850
SA-249	TP347H	18Cr-10Ni-Cb	8	75000	(4)	15950	14050	13000	12300	11450	10900	10600	10350
SA-249	TP348	18Cr-10Ni-Cb	8	75000	(1) (4)	15950	14300	13450	13100	12850	12850	12850	12850
SA-249	TP348	18Cr-10Ni-Cb	8	75000	(4)	15950	14050	13000	12300	11450	10900	10600	10350
SA-249	TP348H	18Cr-10Ni-Cb	8	75000	(1) (4)	15950	14300	13450	13100	12850	12850	12850	12850
SA-249	TP348H	18Cr-10Ni-Cb	8	75000	(4)	15950	14050	13000	12300	11450	10900	10600	10350
SA-249	TP348H	18Cr-10Ni-Cb	8	75000	(1) (4)	15950	14300	13450	13100	12850	12850	12850	12850
SA-249	TP348H	18Cr-10Ni-Cb	8	75000	(4)	15950	14050	13000	12300	11450	10900	10600	10350
SA-268	TP405	12Cr-Al	8	60000	(4)	12750	12150	11750	11300	10900	10550	10400	10250
SA-268	TP410	13Cr	8	60000	(4)	12750	12150	11750	11300	10900	10550	10400	10250
SA-268	TP430	16Cr	8	60000	(4)	12750	12150	11750	11300	10900	10550	10400	10250
SA-312	TP304	18Cr-8Ni	8	75000	(1) (4) (10) (14)	15950	14050	13200	12700	12350	12200	12150	12050
SA-312	TP304	18Cr-8Ni	8	75000	(4) (10) (14)	15950	13600	11700	10400	9700	9200	9050	8900
SA-312	TP304H	18Cr-8Ni	8	75000	(1) (4)	15950	14050	13200	12700	12350	12200	12150	12050
SA-312	TP304H	18Cr-8Ni	8	75000	(4)	15950	13600	11700	10400	9700	9200	9050	8900
SA-312	TP304L	18Cr-8Ni	8	70000	(1) (4)	14900	14500	13600	12750	11900	11050	10600	10200
SA-312	TP304L	18Cr-8Ni	8	70000	(4)	14900	13000	11150	9350	8250	7650	7450	7200
SA-312	TP309	23Cr-12Ni	8	75000	(1) (4) (10)	15950	14600	13950	13450	13150	13000	12900	12850
SA-312	TP309	23Cr-12Ni	8	75000	(4) (10)	15950	14350	13450	12650	12000	11350	11100	10800
SA-312	TP310	25Cr-20Ni	8	75000	(1) (2) (4) (10)	15950	14600	13950	13450	13150	13000	12900	12850
SA-312	TP310	25Cr-20Ni	8	75000	(2) (4) (10)	15950	14350	13450	12650	12000	11350	11100	10800
SA-312	TP310	25Cr-20Ni	8	75000	(1) (3) (4) (10)	15950	14600	13950	13450	13150	13000	12900	12850
SA-312	TP310	25Cr-20Ni	8	75000	(3) (4) (10)	15950	14350	13450	12650	12000	11350	11100	10800
SA-312	TP316	18Cr-12Ni-2Mo	8	75000	(1) (4) (10) (14)	15950	14850	14350	13850	13600	13600	13600	13600
SA-312	TP316	18Cr-12Ni-2Mo	8	75000	(4) (10) (14)	15950	13700	12400	11450	10700	10100	9850	9600
SA-312	TP316H	18Cr-12Ni-2Mo	8	75000	(1) (4)	15950	14850	14350	13850	13600	13600	13600	13600
SA-312	TP316H	18Cr-12Ni-2Mo	8	75000	(4)	15950	13700	12400	11450	10700	10100	9850	9600
SA-312	TP316L	18Cr-12Ni-2Mo	8	70000	(1) (4)	14900	13490	13450	12550	11900	11600	11400	11250
SA-312	TP316L	18Cr-12Ni-2Mo	8	70000	(4)	14900	13800	12300	10200	9350	8650	8350	8050
SA-312	TP317	19Cr-13Ni-3Mo	8	75000	(1) (4) (10) (14)	15950	14850	14350	13850	13600	13600	13600	13600
SA-312	TP317	19Cr-13Ni-3Mo	8	75000	(4) (10) (14)	15950	13700	12400	11450	10700	10100	9850	9600
SA-312	TP321	18Cr-10Ni-Ti	8	75000	(1) (4)	15950	14300	13450	13100	12850	12850	12850	12850

TABLE UHA-23 MAXIMUM ALLOWABLE STRESS VALUES IN TENSION FOR HIGH-ALLOY STEEL, IN POUNDS PER SQUARE INCH (Continued)

(See Par. UW-12 (c) for vessels constructed under Part UW that include welded joints that are neither fully radiographed nor spot radiographically examined)

For Metal Temperatures Not Exceeding Deg F: 750	800	850	900	950	1000	1050	1100	1150	1200	1250	1300	1350	1400	1450	1500	Material and Specification Number	Type or Grade
																PIPE & TUBES	
																Seamless (Cont.)	
14100	14100	14000	13900	13800	13550	12800	10500	7700	5500	4100	3000	2200	1600	1100	750	SA-430	FP321H
12000	11900	11600	11300	11200	11000	10800	10000	7700	5500	4100	3000	2200	1600	1100	750	SA-430	FP321H
14100	14100	14000	13900	13800	13200	12000	9100	6100	4400	3300	2200	1500	1200	900	750	SA-430	FP347
12000	11900	11600	11300	11200	11000	10650	9100	6100	4400	3300	2200	1500	1200	900	750	SA-430	FP347
14100	14100	14000	13900	13800	13550	13000	12000	8500	6000	4500	3300	2400	1800	1350	1050	SA-430	FP347H
12000	11900	11600	11300	11200	11000	10800	10300	8500	6000	4500	3300	2400	1800	1350	1050	SA-430	FP347H
14700	14550	14300	14000	13400	12500	10000	7500	5750	4500	3250	2450	1800	1400	1000	750	SA-452	TP304H
10400	10000	9700	9400	9100	8800	8500	7500	5750	4500	3250	2450	1800	1400	1000	750	SA-452	TP304H
16900	16750	16500	16000	15100	14000	12200	10400	8500	6800	5300	4000	3000	2350	1850	1500	SA-452	TP316H
12000	11900	11600	11300	11200	11000	...	...	...	...	...	...	...	...	...	...	SA-452	TP347H
																Welded	
12000	11900	11750	11550	11400	10600	9450	7400	5850	4650	3700	2900	2200	1750	1350	1050	SA-249	TP304
8850	8700	8650	8500	8300	8050	7650	7000	5850	4650	3700	2900	2200	1750	1350	1050	SA-249	TP304
12000	11900	11750	11550	11400	10600	9450	7400	5850	4650	3700	2900	2200	1750	1350	1050	SA-249	TP304H
8850	8700	8650	8500	8300	8050	7650	7000	5850	4650	3700	2900	2200	1750	1350	1050	SA-249	TP304H
9800	9350	...	...	...	...	...	...	...	...	...	...	...	...	...	...	SA-249	TP304L
7050	6900	...	...	...	...	...	...	...	...	...	...	...	...	...	...	SA-249	TP304L
12750	12650	12400	11750	10600	8900	7200	5500	4250	3250	2450	1950	1500	1100	750	650	SA-249	TP309
10600	10350	10100	9900	9500	8650	7200	5500	4250	3250	2450	1950	1500	1100	750	650	SA-249	TP309
12750	12650	12400	11750	10600	9350	8300	7200	6150	5100	4050	2950	2000	1350	950	650	SA-249	TP310
10600	10350	10100	9900	9650	9200	8300	7200	6150	5100	4050	2950	2000	1350	950	650	SA-249	TP310
12750	12650	12400	11750	10600	9350	6050	4250	3050	2100	1250	650	400	300	200	150	SA-249	TP310
10600	10350	10100	9900	9450	8350	6000	4250	3050	2100	1250	650	400	300	200	150	SA-249	TP310
13450	13200	12950	12600	12350	11900	11300	10200	8050	5900	4500	3400	2300	1700	1250	950	SA-249	TP316
9350	9200	9000	8750	8600	8350	8200	8050	7350	5900	4500	3400	2300	1700	1250	950	SA-249	TP316
13450	13200	12950	12600	12350	11900	11300	10200	8050	5900	4500	3400	2300	1700	1250	950	SA-249	TP316H
9350	9200	9000	8750	8600	8350	8200	8050	7350	5900	4500	3400	2300	1700	1250	950	SA-249	TP316H
11050	10800	10400	...	...	...	...	...	...	...	...	...	...	...	...	...	SA-249	TP316L
7750	7500	7200	...	...	...	...	...	...	...	...	...	...	...	...	...	SA-249	TP316L
13450	13200	12950	12600	12350	11900	11300	10200	8050	5900	4500	3400	2300	1700	1250	950	SA-249	TP317
9350	9200	9000	8750	8600	8350	8200	8050	7350	5900	4500	3400	2300	1700	1250	950	SA-249	TP317
12850	12850	12750	12650	12600	11900	10300	7750	5200	3750	2800	1850	1250	1000	750	650	SA-249	TP321
10200	10100	9850	9600	9500	9250	9050	7750	5200	3750	2800	1850	1250	1000	750	650	SA-249	TP321
12850	12850	12750	12650	12600	12300	11650	8900	6550	4650	3500	2550	1850	1350	950	650	SA-249	TP321H
10200	10100	9850	9600	9500	9350	9200	8500	6550	4650	3500	2550	1850	1350	950	650	SA-249	TP321H
12850	12850	12750	12650	12600	11900	10300	7750	5200	3750	2800	1850	1250	1000	750	650	SA-249	TP347
10200	10100	9850	9600	9500	9350	9050	7750	5200	3750	2800	1850	1250	1000	750	650	SA-249	TP347
12850	12850	12750	12650	12600	12300	11800	10200	7200	5100	3800	2800	2050	1550	1150	900	SA-249	TP347H
10200	10100	9850	9600	9500	9350	9200	8750	7200	5100	3800	2800	2050	1550	1150	900	SA-249	TP347H
12850	12850	12750	12650	12600	12300	11800	10200	7200	5100	3800	2800	2050	1550	1150	900	SA-249	TP348
10200	10100	9850	9600	9500	9350	9050	7750	5200	3750	2800	1850	1250	1000	750	650	SA-249	TP348
12850	12850	12750	12650	12600	12300	11800	10200	7200	5100	3800	2800	2050	1550	1150	900	SA-249	TP348H
10200	10100	9850	9600	9500	9350	9200	8750	7200	5100	3800	2800	2050	1550	1150	900	SA-249	TP348H
12850	12850	12750	12650	12600	12300	11800	10200	7200	5100	3800	2800	2050	1550	1150	900	SA-249	TP348H
10200	10100	9850	9600	9500	9350	9200	8750	7200	5100	3800	2800	2050	1550	1150	900	SA-249	TP348H
...	...	...	...	...	...	...	...	...	...	...	...	...	...	...	...	SA-268	TP405
...	...	...	...	...	...	...	...	...	...	...	...	...	...	...	...	SA-268	TP410
...	...	...	...	...	...	...	...	...	...	...	...	...	...	...	...	SA-268	TP430
12000	11900	11750	11550	11400	10600	9450	7400	5850	4650	3700	2900	2200	1750	1350	1050	SA-312	TP304
8850	8700	8650	8500	8300	8050	7650	7000	5850	4650	3700	2900	2200	1750	1350	1050	SA-312	TP304
12000	11900	11750	11550	11400	10600	9450	7400	5850	4650	3700	2900	2200	1750	1350	1050	SA-312	TP304H
8850	8700	8650	8500	8300	8050	7650	7000	5850	4650	3700	2900	2200	1750	1350	1050	SA-312	TP304H
9800	9350	...	...	...	...	...	...	...	...	...	...	...	...	...	...	SA-312	TP304L
7050	6900	...	...	...	...	...	...	...	...	...	...	...	...	...	...	SA-312	TP304L
12750	12650	12400	11750	10600	8900	7200	5500	4250	3250	2450	1950	1500	1100	750	650	SA-312	TP309
10600	10350	10100	9900	9500	8650	7200	5500	4250	3250	2450	1950	1500	1100	750	650	SA-312	TP309
12750	12650	12400	11750	10600	9350	8300	7200	6150	5100	4050	2950	2000	1350	950	650	SA-312	TP310
10600	10350	10100	9900	9650	9200	8300	7200	6150	5100	4050	2950	2000	1350	950	650	SA-312	TP310
12750	12650	12400	11750	10600	9350	6050	4250	3050	2100	1250	650	400	300	200	150	SA-312	TP310
10600	10350	10100	9900	9450	8350	6000	4250	3050	2100	1250	650	400	300	200	150	SA-312	TP310
13450	13200	12950	12600	12350	11900	11300	10200	8050	5900	4500	3400	2300	1700	1250	950	SA-312	TP316
9350	9200	9000	8750	8600	8350	8200	8050	7350	5900	4500	3400	2300	1700	1250	950	SA-312	TP316
13450	13200	12950	12600	12350	11900	11300	10200	8050	5900	4500	3400	2300	1700	1250	950	SA-312	TP316H
9350	9200	9000	8750	8600	8350	8200	8050	7350	5900	4500	3400	2300	1700	1250	950	SA-312	TP316H
11050	10800	10400	...	...	...	...	...	...	...	...	...	...	...	...	...	SA-312	TP316L
7750	7500	7200	...	...	...	...	...	...	...	...	...	...	...	...	...	SA-312	TP316L
13450	13200	12950	12600	12350	11900	11300	10200	8050	5900	4500	3400	2300	1700	1250	950	SA-312	TP317
9350	9200	9000	8750	8600	8350	8200	8050	7350	5900	4500	3400	2300	1700	1250	950	SA-312	TP317
12850	12850	12750	12650	12600	11900	10300	7750	5200	3750	2800	1850	1250	1000	750	650	SA-312	TP321

TABLE UHA-23 MAXIMUM ALLOWABLE STRESS VALUES IN TENSION FOR HIGH-ALLOY STEEL, IN POUNDS PER SQUARE INCH (Continued)

(See Par. UW-12(c) for vessels constructed under Part UW that include welded joints that are neither fully radiographed nor spot radiographically examined)

Material and Specification Number	Type or Grade	Nominal Composition	P-Number	Spec Min Tensile	Notes	For Metal Temperatures Not Exceeding Deg F: -20 to 100	200	300	400	500	600	650	700
PIPE & TUBES													
Welded (Cont.)													
SA-312	TP321	18Cr-10Ni-Ti	8	75000	(4)	15950	14050	13000	12300	11450	10900	10600	10350
SA-312	TP321H	18Cr-10Ni-Ti	8	75000	(1) (4)	15950	14300	13450	13100	12850	12850	12850	12850
SA-312	TP321H	18Cr-10Ni-Ti	8	75000	(4)	15950	14050	13000	12300	11450	10900	10600	10350
SA-312	TP347	18Cr-10Ni-Cb	8	75000	(1) (4)	15950	14300	13450	13100	12850	12850	12850	12850
SA-312	TP347	18Cr-10Ni-Cb	8	75000	(4)	15950	14050	13000	12300	11450	10900	10600	10350
SA-312	TP347H	18Cr-10Ni-Cb	8	75000	(1) (4)	15950	14300	13450	13100	12850	12850	12850	12850
SA-312	TP347H	18Cr-10Ni-Cb	8	75000	(4)	15950	14050	13000	12300	11450	10900	10600	10350
SA-312	TP348	18Cr-10Ni-Cb	8	75000	(1) (4)	15950	14300	13450	13100	12850	12850	12850	12850
SA-312	TP348	18Cr-10Ni-Cb	8	75000	(4)	15950	14050	13000	12300	11450	10900	10600	10350
SA-312	TP348H	18Cr-10Ni-Cb	8	75000	(1) (4)	15950	14300	13450	13100	12850	12850	12850	12850
SA-312	TP348H	18Cr-10Ni-Cb	8	75000	(4)	15950	14050	13000	12300	11450	10900	10600	10350
FORGINGS													
SA-182	F6	13Cr	6	85000	...	21250	20250	19550	18850	18200	17600	17350	17100
SA-182	F304	18Cr-8Ni	8	75000	(1) (10) (14)	18750	16550	15550	14950	14550	14350	14300	14200
SA-182	F304	18Cr-8Ni	8	75000	(10) (14)	18750	16000	13750	12250	11400	10800	10650	10500
SA-182	F304	18Cr-8Ni	8	70000	(1)(10)(12)(14)	17500	15450	14500	13950	13550	13350	13300	13250
SA-182	F304	18Cr-8Ni	8	70000	(10) (12) (14)	17500	15450	13750	12250	11400	10800	10650	10500
SA-182	F304H	18Cr-8Ni	8	75000	(1)	18750	16550	15550	14950	14550	14350	14300	14200
SA-182	F304H	18Cr-8Ni	8	75000	...	18750	16000	13750	12250	11400	10800	10650	10500
SA-182	F304H	18Cr-8Ni	8	70000	(1) (12)	17500	15450	14500	13950	13550	13350	13300	13250
SA-182	F304H	18Cr-8Ni	8	70000	(12)	17500	15450	13750	12250	11400	10800	10650	10500
SA-182	F304L	18Cr-8Ni	8	65000	(1)	16250	15850	15400	15000	14000	13000	12500	12000
SA-182	F304L	18Cr-8Ni	8	65000	...	16250	14550	12850	11000	9700	9000	8750	8500
SA-182	F321	18Cr-10Ni-Ti	8	75000	(1)	18750	16800	15850	15400	15100	15100	15100	15100
SA-182	F321	18Cr-10Ni-Ti	8	75000	...	18750	16550	15300	14450	13500	12800	12500	12200
SA-182	F321	18Cr-10Ni-Ti	8	70000	(1) (12)	17500	15700	14800	14350	14100	14100	14100	14100
SA-182	F321	18Cr-10Ni-Ti	8	70000	(12)	17500	15700	14800	14350	13500	12800	12500	12200
SA-182	F321H	18Cr-10Ni-Ti	8	75000	(1)	18750	16800	15850	15400	15100	15100	15100	15100
SA-182	F321H	18Cr-10Ni-Ti	8	75000	...	18750	16550	15300	14450	13500	12800	12500	12200
SA-182	F321H	18Cr-10Ni-Ti	8	70000	(1) (12)	17500	15700	14800	14350	14100	14100	14100	14100
SA-182	F321H	18Cr-10Ni-Ti	8	70000	(12)	17500	15700	14800	14350	13500	12800	12500	12200
SA-182	F347	18Cr-10Ni-Cb	8	75000	(1)	18750	16800	15850	15400	15100	15100	15100	15100
SA-182	F347	18Cr-10Ni-Cb	8	75000	...	18750	16550	15300	14450	13500	12800	12500	12200
SA-182	F347	18Cr-10Ni-Cb	8	70000	(1) (12)	17500	15700	14800	14350	14100	14100	14100	14100
SA-182	F347	18Cr-10Ni-Cb	8	70000	(12)	17500	15700	14800	14350	13500	12800	12500	12200
SA-182	F347H	18Cr-10Ni-Cb	8	75000	(1)	18750	16800	15850	15400	15100	15100	15100	15100
SA-182	F347H	18Cr-10Ni-Cb	8	75000	...	18750	16550	15300	14450	13500	12800	12500	12200
SA-182	F347H	18Cr-10Ni-Cb	8	70000	(1) (12)	17500	15700	14800	14350	14100	14100	14100	14100
SA-182	F347H	18Cr-10Ni-Cb	8	70000	(12)	17500	15700	14800	14350	13500	12800	12500	12200
SA-182	F348	18Cr-10Ni-Cb	8	75000	(1)	18750	16800	15850	15400	15100	15100	15100	15100
SA-182	F348	18Cr-10Ni-Cb	8	75000	...	18750	16550	15300	14450	13500	12800	12500	12200
SA-182	F348	18Cr-10Ni-Cb	8	70000	(1) (12)	17500	15700	14800	14350	14100	14100	14100	14100
SA-182	F348	18Cr-10Ni-Cb	8	70000	(12)	17500	15700	14800	14350	13500	12800	12500	12200
SA-182	F348H	18Cr-10Ni-Cb	8	75000	(1)	18750	16800	15850	15400	15100	15100	15100	15100
SA-182	F348H	18Cr-10Ni-Cb	8	75000	...	18750	16550	15300	14450	13500	12800	12500	12200
SA-182	F348H	18Cr-10Ni-Cb	8	70000	(1) (12)	17500	15700	14800	14350	14100	14100	14100	14100
SA-182	F348H	18Cr-10Ni-Cb	8	70000	(12)	17500	15700	14800	14350	13500	12800	12500	12200
SA-182	F316	18Cr-12Ni-2Mo	8	75000	(1) (10) (14)	18750	17500	16900	16300	16000	16000	16000	16000
SA-182	F316	18Cr-12Ni-2Mo	8	75000	(10) (14)	18750	16100	14600	13500	12600	11900	11600	11300
SA-182	F316	18Cr-12Ni-2Mo	8	70000	(1)(10)(12)(14)	17500	16350	15750	15200	14950	14950	14950	14950
SA-182	F316	18Cr-12Ni-2Mo	8	70000	(10) (12) (14)	17500	16100	14600	13500	12600	11900	11600	11300
SA-182	F316H	18Cr-12Ni-2Mo	8	75000	(1)	18750	17500	16900	16300	16000	16000	16000	16000
SA-182	F316H	18Cr-12Ni-2Mo	8	75000	...	18750	16100	14600	13500	12600	11900	11600	11300
SA-182	F316H	18Cr-12Ni-2Mo	8	70000	(1) (12)	17500	16350	15750	15200	14950	14950	14950	14950
SA-182	F316H	18Cr-12Ni-2Mo	8	70000	(12)	17500	16100	14600	13500	12600	11900	11600	11300
SA-182	F316L	17Cr-12Ni-2Mo	8	65000	(1)	16250	15750	15250	14750	14000	13600	13450	13250
SA-182	F316L	17Cr-12Ni-2Mo	8	65000	...	16250	14850	13450	12000	11000	10150	9800	9450
SA-182	F310	25Cr-20Ni	8	75000	(1) (2) (10)	18750	17200	16400	15850	15500	15300	15200	15100
SA-182	F310	25Cr-20Ni	8	75000	(2) (10)	18750	16900	15850	14900	14100	13350	13050	12700
SA-182	F310	25Cr-20Ni	8	75000	(1) (3) (10)	18750	17200	16400	15850	15500	15300	15200	15100
SA-182	F310	25Cr-20Ni	8	75000	(3) (10)	18750	16900	15850	14900	14100	13350	13050	12700

TABLE UHA-23 MAXIMUM ALLOWABLE STRESS VALUES IN TENSION FOR HIGH-ALLOY STEEL, IN POUNDS PER SQUARE INCH (Continued)

(See Par. UW-12(c) for vessels constructed under Part UW that include welded joints that are neither fully radiographed nor spot radiographically examined)

For Metal Temperatures Not Exceeding Deg F: 750	800	850	900	950	1000	1050	1100	1150	1200	1250	1300	1350	1400	1450	1500	Material and Specification Number	Type or Grade
																PIPE & TUBES	
																Welded (Cont.)	
10200	10100	9850	9600	9500	9350	9050	7750	5200	3750	2800	1850	1250	1000	750	650	SA-312	TP321
12850	12850	12750	12650	12600	12300	11650	8900	6550	4650	3500	2550	1850	1350	950	650	SA-312	TP321H
10200	10100	9850	9600	9500	9350	9200	8500	6550	4650	3500	2550	1850	1350	950	650	SA-312	TP321H
12850	12850	12750	12650	12600	11900	10300	7750	5200	3750	2800	1850	1250	1000	750	650	SA-312	TP347
10200	10100	9850	9600	9500	9350	9050	7750	5200	2750	2800	1850	1250	1000	750	650	SA-312	TP347
12850	12850	12750	12650	12600	12300	11800	10200	7200	5100	3800	2800	2050	1550	1150	900	SA-312	TP347H
10200	10100	9850	9600	9500	9350	9200	8750	7200	5100	3800	2800	2050	1550	1150	900	SA-312	TP347H
12850	12850	12750	12650	12600	11900	10300	7750	5200	3750	2800	1850	1250	1000	750	650	SA-312	TP348
10200	10100	9850	9600	9500	9350	9050	7750	5200	3750	2800	1850	1250	1000	750	650	SA-312	TP348
12850	12850	12750	12650	12600	12300	11800	10200	7200	5100	3800	2800	2050	1550	1150	900	SA-312	TP348H
10200	10100	9850	9600	9500	9350	9200	8750	7200	5100	3800	2800	2050	1550	1150	900	SA-312	TP348H
																FORGINGS	
16500	15700	14400	12300	8800	6400	4400	2900	1750	1000	...	...	...	...	...	...	SA-182	F6
14100	14000	13850	13600	13400	12500	11100	8700	6900	5500	4350	3400	2600	2050	1600	1250	SA-182	F304
10400	10250	10150	10000	9750	9450	9000	8250	6900	5500	4350	3400	2600	2050	1600	1250	SA-182	F304
13150	13050	12900	12700	12400	11400	10700	8700	6900	5500	4350	3400	2600	2050	1600	1250	SA-182	F304
10400	10250	10150	10000	9750	9450	9000	8250	6900	5500	4350	3400	2600	2050	1600	1250	SA-182	F304
14100	14000	13850	13600	13400	12500	11100	8700	6900	5500	4350	3400	2600	2050	1600	1250	SA-182	F304H
10400	10250	10150	10000	9750	9450	9000	8250	6900	5500	4350	3400	2600	2050	1600	1250	SA-182	F304H
13150	13050	12900	12700	12400	11400	10700	8700	6900	5500	4350	3400	2600	2050	1600	1250	SA-182	F304H
10400	10250	10150	10000	9750	9450	9000	8250	6900	5500	4350	3400	2600	2050	1600	1250	SA-182	F304H
11500	11000	...	...	...	...	...	...	...	...	...	...	...	...	...	...	SA-182	F304L
8300	8100	...	...	...	...	...	...	...	...	...	...	...	...	...	...	SA-182	F304L
15100	15100	15000	14900	14800	14000	12100	9100	6100	4400	3300	2200	1500	1200	900	750	SA-182	F321
12000	11900	11600	11300	11200	11000	10650	9100	6100	4400	3300	2200	1500	1200	900	750	SA-182	F321
14100	14100	14000	13900	13800	13200	12000	9100	6100	4400	3300	2200	1500	1200	900	750	SA-182	F321
12000	11900	11600	11300	11200	11000	10650	9100	6100	4400	3300	2200	1500	1200	900	750	SA-182	F321
15100	15100	15000	14900	14800	14500	13700	10500	7700	5500	4100	3300	2200	1600	1100	750	SA-182	F321H
12000	11900	11600	11300	11200	11000	10800	10000	7700	5500	4100	3300	2200	1600	1100	750	SA-182	F321H
14100	14100	14000	13900	13800	13550	12800	10500	7700	5500	4100	3300	2200	1600	1100	750	SA-182	F321H
12000	11900	11600	11300	11200	11000	10800	10000	7700	5500	4100	3300	2200	1600	1100	750	SA-182	F321H
15100	15100	15000	14900	14800	14000	12100	9100	6100	4400	3300	2200	1500	1200	900	750	SA-182	F347
12000	11900	11600	11300	11200	11000	10650	9100	6100	4400	3300	2200	1500	1200	900	750	SA-182	F347
14100	14100	14000	13900	13800	13200	12000	9100	6100	4400	3300	2200	1500	1200	900	750	SA-182	F347
12000	11900	11600	11300	11200	11000	10650	9100	6100	4400	3300	2200	1500	1200	900	750	SA-182	F347
15100	15100	15000	14900	14800	14500	13900	12000	8500	6000	4500	3300	2400	1800	1350	1050	SA-182	F347H
12000	11900	11600	11300	11200	11000	10800	10300	8500	6000	4500	3300	2400	1800	1350	1050	SA-182	F347H
14100	14100	14000	13900	13800	13550	13000	12000	8500	6000	4500	3300	2400	1800	1350	1050	SA-182	F347H
12000	11900	11600	11300	11200	11000	10800	10300	8500	6000	4500	3300	2400	1800	1350	1050	SA-182	F347H
15100	15100	15000	14900	14800	14000	12100	9100	6100	4400	3300	2200	1500	1200	900	750	SA-182	F348
12000	11900	11600	11300	11200	11000	10650	9100	6100	4400	3300	2200	1500	1200	900	750	SA-182	F348
14100	14100	14000	13900	13800	13200	12000	9100	6100	4400	3300	2200	1500	1200	900	750	SA-182	F348
12000	11900	11600	11300	11200	11000	10650	9100	6100	4400	3300	2200	1500	1200	900	750	SA-182	F348
15100	15100	15000	14900	14800	14500	13900	12000	8500	6000	4500	3300	2400	1800	1350	1050	SA-182	F348H
12000	11900	11600	11300	11200	11000	10800	10300	8500	6000	4500	3300	2400	1800	1350	1050	SA-182	F348H
14100	14100	14000	13900	13800	13550	13000	12000	8500	6000	4500	3300	2400	1800	1350	1050	SA-182	F348H
12000	11900	11600	11300	11200	11000	10800	10300	8500	6000	4500	3300	2400	1800	1350	1050	SA-182	F348H
15850	15550	15250	14850	14550	14000	13300	12000	9500	6950	5300	4000	2700	2000	1500	1150	SA-182	F316
11000	10800	10600	10300	10100	9800	9650	9450	8650	6950	5300	4000	2700	2000	1500	1150	SA-182	F316
14950	14950	14750	14450	14000	13500	12700	11600	9500	6950	5300	4000	2700	2000	1500	1150	SA-182	F316
11000	10800	10600	10300	10100	9800	9650	9450	8650	6950	5300	4000	2700	2000	1500	1150	SA-182	F316H
15850	15550	15250	14850	14550	14000	13300	12000	9500	6950	5300	4000	2700	2000	1500	1150	SA-182	F316H
11000	10800	10600	10300	10100	9800	9650	9450	8650	6950	5300	4000	2700	2000	1500	1150	SA-182	F316H
14950	14950	14750	14450	14000	13500	12700	11600	9500	6950	5300	4000	2700	2000	1500	1150	SA-182	F316H
11000	10800	10600	10300	10100	9800	9650	9450	8650	6950	5300	4000	2700	2000	1500	1150	SA-182	F316H
13000	12700	12250	...	...	...	...	...	...	...	...	...	...	...	...	...	SA-182	F316L
9100	8800	8500	...	...	...	...	...	...	...	...	...	...	...	...	...	SA-182	F316L
15000	14900	14600	13850	12500	11000	9750	8500	7250	6000	4750	3500	2350	1600	1100	750	SA-182	F310
12500	12150	11900	11650	11350	10800	9750	8500	7250	6000	4750	3500	2350	1600	1100	750	SA-182	F310
15000	14900	14600	13850	12500	11000	7100	5000	3600	2500	1450	750	450	350	250	200	SA-182	F310
12500	12150	11900	11650	11100	9850	7100	5000	3600	2500	1450	750	450	350	250	200	SA-182	F310

TABLE UHA-23 MAXIMUM ALLOWABLE STRESS VALUES IN TENSION FOR HIGH-ALLOY STEEL, IN POUNDS PER SQUARE INCH (Continued)

(See Par. UW-12(c) for vessels constructed under Part UW that include welded joints that are neither fully radiographed nor spot radiographically examined)

Material and Specification Number	Type or Grade	Nominal Composition	P-Number	Spec Min Tensile	Notes	For Metal Temperatures Not Exceeding Deg F: −20 to 100	200	300	400	500	600	650	700
FORGINGS (Cont.)													
SA-336	F6	13Cr	6	75000	...	18750	17850	17250	16650	16050	15550	15300	15100
SA-336	F8	18Cr-8Ni	8	70000	(1) (10) (14)	17500	15450	14500	13950	13550	13350	13300	13250
SA-336	F8	18Cr-8Ni	8	70000	(10) (14)	17500	15450	13750	12250	11400	10800	10650	10500
SA-336	F8t	18Cr-10Ni-Ti	8	70000	(1) (10) (13)	17500	15700	14800	14350	14100	14100	14100	14100
SA-336	F8t	18Cr-10Ni-Ti	8	70000	(10) (13)	17500	15700	14800	14350	13500	12800	12500	12200
SA-336	F8c	18Cr-10Ni-Cb	8	70000	(1) (10) (13)	17500	15700	14800	14350	14100	14100	14100	14100
SA-336	F8c	18Cr-10Ni-Cb	8	70000	(10) (13)	17500	15700	14800	14350	13500	12800	12500	12200
SA-336	F8m	18Cr-12Ni-2Mo	8	70000	(1) (10) (14)	17500	16350	15750	15200	14950	14950	14950	14950
SA-336	F8m	18Cr-12Ni-2Mo	8	70000	(10) (14)	17500	16100	14600	13500	12600	11900	11600	11300
SA-336	F25	25Cr-20Ni	8	75000	(1) (2) (10)	18750	17200	16400	15850	15500	15300	15200	15100
SA-336	F25	25Cr-20Ni	8	75000	(2) (10)	18750	16900	15850	14900	14100	13350	13050	12700
SA-336	F25	25Cr-20Ni	8	75000	(1) (3) (10)	18750	17200	16400	15850	15500	15300	15200	15100
SA-336	F25	25Cr-20Ni	8	75000	(3) (10)	18750	16900	15850	14900	14100	13350	13050	12700
CASTINGS													
SA-351	CA15	13Cr-½Mo	6	90000	(6)	22500	21450	20650	19950	19250	18650	18350	18100
SA-351	CF3	18Cr-8Ni	8	70000	(1)	17500	15450	14500	13950	13550	13350	13300	13250
SA-351	CF3	18Cr-8Ni	8	70000		17500	15450	13750	12250	11400	10800	10650	10500
SA-351	CF3M	18Cr-9Ni-2½Mo	8	70000	(1) (11)	17500	16500	16000	15600	15300	15000	14800	14500
SA-351	CF3M	18Cr-9Ni-2½Mo	8	70000	(11)	17500	15900	14200	13500	13200	13000	12800	12600
SA-351	CF8	18Cr-8Ni	8	70000	(1) (10)	17500	15450	14500	13950	13550	13350	13300	13250
SA-351	CF8	18Cr-8Ni	8	70000	(10)	17500	15450	13750	12250	11400	10800	10650	10500
SA-351	CF8M	18Cr-9Ni-2½Mo	8	70000	(1) (11)	17500	16500	16000	15600	15300	15000	14800	14500
SA-351	CF8M	18Cr-9Ni-2½Mo	8	70000	(11)	17500	15900	14200	13500	13200	13000	12800	12600
SA-351	CF8M	18Cr-12Ni-2Mo	8	70000	(1) (10)	17500	16350	15750	15200	14950	14950	14950	14950
SA-351	CF8M	18Cr-12Ni-2Mo	8	70000	(10)	17500	16100	14600	13500	12600	11900	11600	11300
SA-351	CF8C	18Cr-10Ni-Cb	8	70000	(1) (10)	17500	15700	14800	14350	14100	14100	14100	14100
SA-351	CF8C	18Cr-10Ni-Cb	8	70000	(10)	17500	15700	14800	14350	13500	12800	12500	12200
SA-351	CH8	25Cr-12Ni	8	65000	(1) (10)	16250	14900	14200	13750	13450	13250	13150	13050
SA-351	CH8	25Cr-12Ni	8	65000	(10)	16250	14900	14200	13750	13150	12500	12150	11850
SA-351	CH20	25Cr-12Ni	8	70000	(1) (10)	17500	16050	15300	14800	14500	14250	14150	14050
SA-351	CH20	25Cr-12Ni	8	70000	(10)	17500	16050	15300	14800	14100	13350	13050	12700
SA-351	CK20	25Cr-20Ni	8	65000	(1) (10)	16250	14900	14200	13750	13450	13250	13150	13050
SA-351	CK20	25Cr-20Ni	8	65000	(10)	16250	14900	14200	13750	13150	12500	12200	11850
BOLTING													
SA-193	B6(416)	12Cr	..	110000	(5)	20000	19050	18350	17750	17150	16550	16350	16100
SA-193	B6(410)	13Cr	..	110000	(5)	20000	19050	18350	17750	17150	16550	16350	16100
SA-193	B8T	18Cr-10Ni-Ti	..	75000	(5)(7)(10)(13)	15000	15000	13600	12650	12200	11900	11850	11800
SA-193	B8C	18Cr-10Ni-Cb	..	75000	(5)(7)(10)(13)	15000	15000	13600	12650	12200	11900	11850	11800
SA-193	B8	18Cr-8Ni	..	75000	(5)(7)(10)(14)	15000	13300	12000	10900	10000	9300	8950	8650
SA-193	B8M	18Cr-12Ni-2Mo	..	75000	(5)(7)(10)(14)	15000	15000	13600	12650	12200	11900	11850	11800
SA-320	B8	18Cr-8Ni	..	75000	(5) (7) (8)	15000	...	...	...	...	...	...	...
SA-320	B8C	18Cr-10Ni-Cb	..	75000	(5) (7) (8)	15000	...	...	...	...	...	...	...
SA-320	B8T	18Cr-10Ni-Ti	..	75000	(5) (7) (8)	15000	...	...	...	...	...	...	...
SA-320	B8F-S	18Cr-8Ni-S	..	75000	(5) (7) (8)	15000	...	...	...	...	...	...	...
SA-320	B8F-Se	18Cr-8Ni-Se	..	75000	(5) (7) (8)	15000	...	...	...	...	...	...	...
SA-320	B8M	18Cr-12Ni-2Mo	..	75000	(5) (7) (8)	15000	...	...	...	...	...	...	...
BARS													
SA-479	302	18Cr-8Ni	8	75000	(1)	18750	16550	15550	14950	14550	14350	14300	14200
SA-479	302	18Cr-8Ni	8	75000	...	18750	16000	13750	12250	11400	10800	10650	10500
SA-479	304	18Cr-8Ni	8	75000	(1) (10) (14)	18750	16550	15550	14950	14550	14350	14300	14200
SA-479	304	18Cr-8Ni	8	75000	(10) (14)	18750	16000	13750	12250	11400	10800	10650	10500
SA-479	304L	18Cr-8Ni	8	70000	(1)	15600	15450	14500	13950	13550	13000	12750	12600
SA-479	304L	18Cr-8Ni	8	70000	...	15600	13350	11450	10200	9500	9000	8850	8750
SA-479	310S	25Cr-20Ni	8	75000	(1) (2) (10)	18750	17200	16400	15850	15500	15300	15200	15100
SA-479	310S	25Cr-20Ni	8	75000	(2) (10)	18750	16900	15850	14900	14100	13350	13050	12700
SA-479	310S	25Cr-20Ni	8	75000	(1) (3) (10)	18750	17200	16400	15850	15500	15300	15200	15100
SA-479	310S	25Cr-20Ni	8	75000	(3) (10)	18750	16900	15850	14900	14100	13350	13050	12700
SA-479	316	18Cr-12Ni-2Mo	8	75000	(1) (10) (14)	18750	17500	16900	16300	16000	16000	16000	16000
SA-479	316	18Cr-12Ni-2Mo	8	75000	(10) (14)	18750	16100	14600	13500	12600	11900	11600	11300
SA-479	316L	18Cr-12Ni-2Mo	8	70000	(1)	15600	15600	15600	15200	14950	14300	13900	13550
SA-479	316L	18Cr-12Ni-2Mo	8	70000	...	15600	13400	12150	11250	10500	9900	9650	9400
SA-479	321	18Cr-10Ni-Ti	8	75000	(1) (10) (13)	18750	16800	15850	15400	15100	15100	15100	15100
SA-479	321	18Cr-10Ni-Ti	8	75000	(10) (13)	18750	16550	15300	14450	13500	12800	12500	12200
SA-479	347	18Cr-10Ni-Cb	8	75000	(1) (10) (13)	18750	16800	15850	15400	15100	15100	15100	15100
SA-479	347	18Cr-10Ni-Cb	8	75000	(10) (13)	18750	16550	15300	14450	13500	12800	12500	12200
SA-479	348	18Cr-10Ni-Cb	8	75000	(1) (10) (13)	18750	16800	15850	15400	15100	15100	15100	15100
SA-479	348	18Cr-10Ni-Cb	8	75000	(10) (13)	18750	16550	15300	14450	13500	12800	12500	12200
SA-479	410	13Cr	6	65000	...	16250	15450	14950	14400	13900	13450	13250	13100
SA-479	430	17Cr	..	70000	...	17500	16650	16100	15550	15000	14500	14300	14100

TABLE UHA-23 MAXIMUM ALLOWABLE STRESS VALUES IN TENSION FOR HIGH-ALLOY STEEL, IN POUNDS PER SQUARE INCH (Continued)

(See Par. UW-12(c) for vessels constructed under Part UW that include welded joints that are neither fully radiographed nor spot radiographically examined)

For Metal Temperatures Not Exceeding Deg F: 750	800	850	900	950	1000	1050	1100	1150	1200	1250	1300	1350	1400	1450	1500	Material and Specification Number	Type or Grade
																FORGINGS (Cont.)	
14550	13850	13000	11600	8800	6400	4400	2900	1750	1000	...	...	...	...	...	...	SA-336	F6
13150	13050	12900	12700	12400	11400	10700	8700	6900	5500	4350	3400	2600	2050	1600	1250	SA-336	F8
10400	10250	10150	10000	9750	9450	9000	8250	6900	5500	4350	3400	2600	2050	1600	1250	SA-336	F8
14100	14100	14000	13900	13800	13200	12000	9100	6100	4400	3300	2200	1500	1200	900	750	SA-336	F8t
12000	11900	11600	11300	11200	11000	10650	9100	6100	4400	3300	2200	1500	1200	900	750	SA-336	F8t
14100	14100	14000	13900	13800	13200	12000	9100	6100	4400	3300	2200	1500	1200	900	750	SA-336	F8c
12000	11900	11600	11300	11200	11000	10650	9100	6100	4400	3300	3300	1500	1200	900	750	SA-336	F8c
14950	14950	14750	14450	14000	13500	12700	11600	9500	6950	5300	4000	2700	2000	1500	1150	SA-336	F8m
11000	10800	10600	10300	10100	9800	9650	9450	8650	6950	5300	4000	2700	2000	1500	1150	SA-336	F8m
15000	14900	14600	13850	12500	11000	9750	8500	7250	6000	4750	3500	2350	1600	1100	750	SA-336	F25
12500	12150	11900	11650	11350	10800	9750	8500	7250	6000	4750	3500	2350	1600	1100	750	SA-336	F25
15000	14900	14600	13850	12500	11000	7100	5000	3600	2500	1450	750	450	350	250	200	SA-336	F25
12500	12150	11900	11650	11100	9850	7100	5000	3600	2500	1450	750	450	350	250	200	SA-336	F25
																CASTINGS	
17500	16650	14900	11000	7600	5000	3300	2200	1500	1000	...	...	...	...	...	...	SA-351	CA15
13150	13050	...	...	...	...	...	...	...	...	...	...	...	...	...	...	SA-351	CF3
10400	10250	...	...	...	...	...	...	...	...	...	...	...	...	...	...	SA-351	CF3
14100	13700	13300	...	...	...	...	...	...	...	...	...	...	...	...	...	SA-351	CF3M
12500	12400	12100	...	...	...	...	...	...	...	...	...	...	...	...	...	SA-351	CF3M
13150	13050	12900	12700	12400	12000	9600	7500	5750	4500	3250	2450	1800	1400	1000	750	SA-351	CF8
10400	10250	10150	10000	9750	9450	9000	7500	5750	4500	3250	2450	1800	1400	1000	750	SA-351	CF8
14100	13700	13300	12900	12500	12000	10600	9400	8000	6800	5300	4000	3000	2350	1850	1500	SA-351	CF8M
12500	12400	12100	11800	11600	11400	10600	9400	8000	6800	5300	4000	3000	2350	1850	1500	SA-351	CF8M
14950	14950	14750	14450	14000	13150	11500	9400	8000	6800	5300	4000	3000	2350	1850	1500	SA-351	CF8M
11000	10800	10600	10300	10100	9800	9650	9400	8000	6800	5300	4000	3000	2350	1850	1500	SA-351	CF8M
14100	14100	14000	13900	13800	13550	13000	10800	8000	5000	3600	2700	2000	1550	1200	1000	SA-351	CF8C
12000	11900	11600	11300	11200	11000	10650	10450	8000	5000	3600	2700	2000	1550	1200	1000	SA-351	CF8C
13000	12950	12800	12500	11800	10500	8500	6500	5000	3800	2900	2300	1750	1300	900	750	SA-351	CH8
11700	11350	11100	10850	10500	9850	8500	6500	5000	3800	2900	2300	1750	1300	900	750	SA-351	CH8
14000	13900	13750	13300	12500	10500	8500	6500	5000	3800	2900	2300	1750	1300	900	750	SA-351	CH20
12500	12150	11900	11650	11150	10150	8500	6500	5000	3800	2900	2300	1750	1300	900	750	SA-351	CH20
13000	12950	12800	12500	11900	11000	9750	8500	7250	6000	4750	3500	2350	1600	1100	750	SA-351	CK20
11700	11350	11100	10850	10600	10250	9750	8500	7250	6000	4750	3500	2350	1600	1100	750	SA-351	CK20
																BOLTING	
15550	14800	13600	11000	...	...	...	...	...	...	...	...	...	...	...	...	SA-193	B6(416)
15550	14800	13600	11000	...	...	...	...	...	...	...	...	...	...	...	...	SA-193	B6(410)
11750	11650	11450	11300	11100	10800	10500	10000	8000	5000	3600	2700	2000	1550	1200	1000	SA-193	B8T
11750	11650	11450	11300	11100	10800	10500	10000	8000	5000	3600	2700	2000	1550	1200	1000	SA-193	B8C
8300	8000	7750	7500	7250	7050	6800	6300	5750	4500	3250	2450	1800	1400	1000	750	SA-193	B8
11750	11650	11450	11300	11100	10800	10500	10000	8500	6800	5300	4000	3000	2350	1850	1500	SA-193	B8M
...	...	...	...	...	...	...	...	...	...	...	...	...	...	...	...	SA-320	B8
...	...	...	...	...	...	...	...	...	...	...	...	...	...	...	...	SA-320	B8C
...	...	...	...	...	...	...	...	...	...	...	...	...	...	...	...	SA-320	B8T
...	...	...	...	...	...	...	...	...	...	...	...	...	...	...	...	SA-320	B8F-S
...	...	...	...	...	...	...	...	...	...	...	...	...	...	...	...	SA-320	B8F-Se
...	...	...	...	...	...	...	...	...	...	...	...	...	...	...	...	SA-320	B8M
																BARS	
14100	...	...	...	...	...	...	...	...	...	...	...	...	...	...	...	SA-479	302
10400	...	...	...	...	...	...	...	...	...	...	...	...	...	...	...	SA-479	302
14100	14000	13850	13600	13400	12500	...	...	...	...	...	...	...	...	...	...	SA-479	304
10400	10250	10150	10000	9750	9450	...	...	...	...	...	...	...	...	...	...	SA-479	304
12450	12300	12150	11500	9800	8000	...	...	...	...	...	...	...	...	...	...	SA-479	304L
8650	8550	8450	8350	8100	7600	...	...	...	...	...	...	...	...	...	...	SA-479	304L
15000	14900	14600	13850	12500	11000	...	...	...	...	...	...	...	...	...	...	SA-479	310S
12500	12150	11900	11650	11350	10800	...	...	...	...	...	...	...	...	...	...	SA-479	310S
15000	14900	14600	13850	12500	11000	...	...	...	...	...	...	...	...	...	...	SA-479	310S
12500	12150	11900	11650	11100	9850	...	...	...	...	...	...	...	...	...	...	SA-479	310S
15850	15550	15250	14850	14550	14000	...	...	...	...	...	...	...	...	...	...	SA-479	316
11000	10800	10600	10300	10100	9800	...	...	...	...	...	...	...	...	...	...	SA-479	316
13200	13000	12700	12350	12100	11750	...	...	...	...	...	...	...	...	...	...	SA-479	316L
9150	9000	8850	8600	8400	8150	...	...	...	...	...	...	...	...	...	...	SA-479	316L
15100	15100	15000	14900	14800	14000	...	...	...	...	...	...	...	...	...	...	SA-479	321
12000	11900	11600	11300	11200	11000	...	...	...	...	...	...	...	...	...	...	SA-479	321
15100	15100	15000	14900	14800	14000	...	...	...	...	...	...	...	...	...	...	SA-479	347
12000	11900	11600	11300	11200	11000	...	...	...	...	...	...	...	...	...	...	SA-479	347
15100	15100	15000	14900	14800	14000	...	...	...	...	...	...	...	...	...	...	SA-479	348
12000	11900	11600	11300	11200	11000	...	...	...	...	...	...	...	...	...	...	SA-479	348
12650	12000	11250	10450	8800	6400	...	...	...	...	...	...	...	...	...	...	SA-479	410
13600	12950	12150	11000	9200	6500	...	...	...	...	...	...	...	...	...	...	SA-479	430

TABLE UHA-23 MAXIMUM ALLOWABLE STRESS VALUES IN TENSION FOR HIGH-ALLOY STEEL, IN POUNDS PER SQUARE INCH (Continued)

(See Par. UW-12(c) for vessels constructed under Part UW that include welded joints that are neither fully radiographed nor spot radiographically examined)

NOTES:

The stress values in this table may be interpolated to determine values for intermediate temperatures.

Stress values in restricted shear such as dowel bolts, rivets, or similar construction in which the shearing member is so restricted that the section under consideration would fail without reduction of area shall be 0.80 times the values in the above table.

Stress values in bearing shall be 1.60 times the values in the above table.

(1) Due to the relatively low yield strength of these materials, these higher stress values were established at temperatures where the short time tensile properties govern to permit the use of these alloys where slightly greater deformation is acceptable. These higher stress values exceed 62½ per cent but do not exceed 90 per cent of the yield strength at temperature. Use of these stresses may result in dimensional changes due to permanent strain. These stress values are not recommended for the flanges of gasketed joints or other applications where slight amounts of distortion can cause leakage or malfunction.

(2) These stress values at temperatures of 1050 F and above should be used only when assurance is provided that the steel has a predominant grain size not finer than ASTM No. 6.

(3) These stress values shall be considered basic values to be used when no effort is made to control or check the grain size of the steel.

(4) These stress values are the basic values multiplied by a joint efficiency factor of 0.85.

(5) These stress values are established from a consideration of strength only and will be satisfactory for average service. For bolted joints where freedom from leakage over a long period of time without retightening is required, lower stress values may be necessary as determined from the flexibility of the flange and bolts and corresponding relaxation properties.

(6) To these stress values a quality factor as specified in Par. UG-24 shall be applied for castings.

(7) These stress values permitted for material that has been carbide-solution treated.

(8) For temperatures below 100 F, stress values equal to 20 per cent of the specified minimum tensile strength will be permitted.

(9) This steel may be expected to develop embrittlement at room temperature after service at temperatures above 800 F; consequently, its use at higher temperatures is not recommended unless due caution is observed.

(10) At temperatures over 1000 F, these stress values apply only when the carbon is 0.04 per cent or higher.

(11) For temperatures above 800 F, the stress values apply only when the carbon content is 0.04 per cent and above.

(12) These stress values shall be applicable to forgings over 5 inches in thickness.

(13) For temperatures above 1000 F these stress values may be used only if the material has been heat treated at a temperature of 2000 F minimum.

(14) For temperatures above 1000 F these stress values may be used only if the material has been heat treated at a temperature of 1800 F minimum.

sels and vessel parts that are constructed of high-alloy steel and shall be used in conjunction with the general requirements for *Design* in Subsection A, and with the specific requirements for *Design* in Subsection B that pertain to the method of fabrication used.

(b) *Minimum Thickness of Plate* The minimum thickness after forming of any plate subject to pressure shall be $\frac{3}{32}$ inch, except that for high-alloy materials in non-corrosive service the minimum thickness shall be $\frac{1}{16}$ inch (see Par. UG-16(c) for permissible undertolerance).

UHA-21 Welded Joints

When radiographic examination is required for butt-welded joints by Par. UHA-33, joints of Categories A and B (see Par. UW-3) shall be of Type No. (1) and No. (2) of Table UW-12.

UHA-23 Maximum Allowable Stress Values

(a) Table UHA-23 give the maximum allowable stress values at the temperatures indicated for the materials conforming to the specifications listed therein. Values may be interpolated for intermediate temperatures (see Par. UG-23).

(b) For vessels designed to operate at a temperature below –20F, the allowable stress values to be used in design shall not exceed those given in Table UHA-23 for temperatures of –20 F to 100 F.

UHA-28 Thickness of Shells Under External Pressure

Cylindrical and spherical shells under external pressure shall be designed by the rules in Par. UG-28, using the Figures for High Alloy Steels or Fig. UCS-28.2 in Appendix V. Examples illustrating the application of this paragraph are given in Appendix L.

UHA-29 Stiffening Rings for Shells Under External Pressures

Rules covering the design of stiffening rings are given in Par. UG-29. An example illustrating the use of these rules is given in Appendix L.

UHA-30 Attachment of Stiffening Rings to Shell

Rules covering the attachment of stiffening rings are given in Par. UG-30.

UHA-31 Formed Heads, Pressure on Convex Side

Ellipsoidal, torispherical, hemispherical, and conical heads, having pressure on the convex side (minus heads), shall be designed by the rules of Par. UG-33, using the Figures for High Alloy Steels or Fig. UCS-28.2 in Appendix V. Examples illustrating the application of this paragraph are given in Appendix L.

UHA-32 Requirements for Postweld Heat Treatment

(a) Before applying the detailed requirements and exemptions in these paragraphs, satisfactory weld procedure qualifications of the procedures to be used shall be performed in accordance with all the essential variables of Section IX of the Code including conditions of postweld heat treatment or lack of postweld heat treatment and including other restrictions listed below. All welded pressure vessels or pressure vessel parts shall be given a postweld heat treatment at a temperature not less than specified in Table UHA-32 when the nominal thickness, including corrosion allowance, of any welded joint in the vessel or vessel part exceeds the limits in the notes to Table UHA-32. The exemptions provided for in the notes to Table UHA-32 are not permitted when postweld heat treatment is a service requirement as set forth in Pars. UHA-51 and UW-2. The materials in Table UHA-32 are listed in accordance with the Section IX P-Number material groupings of Table Q-11.1 and are also listed in Table UHA-23.

(b) Holding temperatures and/or holding times in excess of the minimum values given in Table UHA-32 may be used.

(c) When pressure parts of two different P-Number groups are joined by welding, the postweld heat treatment shall be that specified in Table UHA-32 with applicable notes for the material requiring the higher postweld temperature. When nonpressure parts are welded to pressure parts, the postweld heat treatment temperature of the pressure part shall control. Ferritic steel parts, when used in conjunction with austenitic chromium-nickel stainless steel vessels, shall not be subjected to the solution heat treatment described in Par. UHA-105(b).

(d) When the welded joint connects parts that are of different thickness, the thickness to be used in applying the requirements for postweld heat treatment in (a) shall be the following:

(1) The thinner of two adjacent butt-welded plates including head to shell connections;

(2) The thicker of the shell or head plate in connections to intermediate heads of the type shown in Fig. UW-13.1(f);

(3) The thickness of the shell in connections to tube sheets, flat heads, covers, or similar constructions;

(4) The thickness of the shell or head plate in nozzle attachment welds;

(5) The thickness of the nozzle neck in nozzle neck to flange connections;

(6) The thickness of the pressure part, at the point of attachment, where a nonpressure part is welded to a pressure part.

TABLE UHA-32
REQUIREMENTS FOR POSTWELD HEAT TREATMENT

Material	Notes	Minimum Holding Temperature F	Minimum Holding Time Temperature, Hours Per Inch of Thickness (Note 1)
P-6	(2) (4)	1400	1
P-7	(2) (5)	1350	1
P-8	(3)		
P-10E*	(5)	1250	1

*For SA-268 Grade TP446 only.

NOTES:
(1) The minimum holding time at temperature for material under ¼ in. in thickness shall be ¼ hours.
(2) Postweld heat treatment is not required for vessels constructed of Type 405 material or of Type 410 material with carbon content not to exceed 0.08 per cent, welded with electrodes that produce an austenitic chromium nickel weld deposit or a non-air-hardening nickel-chromium-iron weld deposit, provided the plate thickness at the welded joint does not exceed ⅜ in., and for thicknesses over ⅜ in. to 1½ in. provided a preheat of 450 F is maintained during welding and the joints are completely radiographed.
(3) Postweld heat treatment is neither required nor prohibited for joints between austenitic stainless steels of the P-8 Group. See Non-mandatory Appendix HA Pars. UHA 100–108 inclusive.
(4) Postweld heat treatment shall be performed as prescribed in Par. UW-40 and UCS-56 (e).
(5) Postweld heat treatment shall be performed as prescribed in Par. UW-40 and UCS-56 (e) except that the cooling rate shall be a maximum of 100 F per hour in the range above 1200 F after which the cooling rate shall be sufficiently rapid to prevent embrittlement.

(e) The operation of postweld heat treatment shall be carried out by one of the procedures given in Par. UW-40 in accordance with the requirements of UCS-56 (e) except as modified by the notes to Table UHA-32.

(f) Vessels or parts of vessels that have been postweld heat treated in accordance with the requirements of this paragraph shall again be postweld heat treated after repairs or alterations have been made if the welds made in such alterations or repairs require postweld treatment under the requirements given in (a).

UHA-33 Radiographic Examination

(a) The requirements for radiographing prescribed in Pars. UW-11, UW-51, and UW-52 shall apply in high-alloy vessels, except as provided in (b) (See Par. UHA-21.)

(b) Butt-welded joints in vessels constructed of materials conforming to Type 405 welded with straight chromium electrodes, and to Types 410 and 430 welded with any electrode, shall be radiographed in all thicknesses. Butt-welded joints in vessels constructed of Type 405 material or of Type 410 with carbon content not to exceed 0.08 per cent, welded with electrodes that produce an austenitic chromium-nickel weld deposit or a non-air-hardening nickel chromium-iron deposit shall be radiographed when the thinner of the plate or vessel wall thickness at the welded joint exceeds 1½ in. The final radiographs of all straight chromium ferritic welds including major repairs to these welds shall be made after postweld heat treatment has been performed.

(c) Butt-welded joints in vessels constructed of austenitic chromium-nickel stainless steels which are radiographed because of the thickness requirements of Par. UW-11, or for lesser thicknesses where the joint efficiency reflects the credit for radiographic examination of Table UW-12, shall be radiographed following post-heating if such is performed.

UHA-34 Liquid Penetrant Examination

All austenitic chromium-nickel alloy steel welds, both butt and fillet, in vessels whose shell thickness exceeds ¾ in. shall be examined for the detection of cracks by the liquid penetrant method. This examination shall be made following heat-treatment if heat-treatment is performed. All cracks shall be eliminated.

FABRICATION

UHA-40 General

The rules in the following paragraphs apply specifically to the fabrication of pressure vessels and vessel parts that are constructed of high-alloy steel and shall be used in conjunction with the general requirements for *Fabrication* in Subsection A, and with the specific requirements for *Fabrication* in Subsection B that pertain to the method of fabrication used.

UHA-41 Marking

(a) The specification number, grade or type number, test identification number, and the name

of the manufacturer shall be legibly marked on each plate not less than 12 inches from the edges. Die stamping may be harmful for some conditions of service.

(b) The plate manufacturer shall describe on the mill-test reports any heat-treatments carried out by him.

UHA-42 Weld-Metal Composition

Welds that are exposed to the corrosive action of the contents of the vessel should have a resistance to corrosion that is not substantially less than that of the base metal. The use of filler metal that will deposit weld metal with practically the same composition as the material joined is recommended. When the manufacturer is of the opinion that a physically better joint can be made by departure from these limits, filler metal of a different composition may be used provided the strength of the weld metal at the operating temperature is not appreciably less than that of the high-alloy material to be welded, and the user is satisfied that its resistance to corrosion is satisfactory for the intended service. The columbium content of weld metal shall not exceed 1.00 per cent.

INSPECTION AND TESTS

UHA-50 General

The rules in the following paragraphs apply specifically to the inspection and testing of pressure vessels and vessel parts that are constructed of high-alloy steel and shall be used in conjunction with the general requirements for *Inspection and Tests* in Subsection A, and with the specific requirements for *Inspection and Tests* in Subsection B that pertain to the method of fabrication used.

UHA-51 Impact Tests

Impact tests as prescribed in Par. UG-84 shall be made for the following combinations of materials and operating temperatures.

(a) For Types 304, 304L and 347 at operating temperatures below –425 F and all other materials below –325 F.

(b) For the following materials operating at a metal temperature below minus 20 F except when the minimum thickness is the greater of those determined under the most severe condition of coincident pressure (external or internal) and temperature in accordance with Par. UG-21 for temperatures of (a) minus 20 F and above, and (b) below minus 20 F in which case the coincident pressure (internal if above atmospheric and external if below atmospheric) shall be multiplied by two and one half:

(1) Ferritic chromium stainless steels.
(2) Austenitic chromium-nickel stainless steels with carbon in excess of 0.10 per cent.
(3) Austenitic chromium-nickel stainless steels that have a nickel or a chromium content in excess of the AISI standard analysis range of the specified type number and product form.
(4) Material in casting form.
(5) Material in the form of deposited weld metal.

(c) For the following materials at all values of operating temperature:

Type 309, 310, 316, 309Cb, 310Cb, or 316Cb material that is postweld heat treated at temperatures below 1650 F. The tests shall include the weld metal and shall be made at room temperature, or at operating temperature if lower.

UHA-52 Welded Test Plates

(a) For welded vessels constructed of Type 405 material which are not postweld heat treated, welded test plates shall be made to include material from each melt of plate steel used in the vessel. Plates from two different melts may be welded together and be represented by a single test plate.

(b) From each welded test plate there shall be taken two face-bend test specimens as prescribed in Par. Q-7 (2) of Section IX; these shall meet the requirements of Par. Q-8, Section IX.

STAMPING AND REPORTS

UHA-60 General

The provisions for stamping and reports in Pars. UG-115 through UG-120 shall apply without supplement to vessels constructed of high-alloy steels.

PRESSURE-RELIEF DEVICES

UHA-65 General

The provisions for pressure-relief devices given in Pars. UG-125 through UG-134 shall apply without supplement to vessels constructed of high-alloy steels.

NON-MANDATORY APPENDIX HA

Suggestions on the Selection and Treatment of Austenitic Chromium-Nickel Steels

UHA-100 General

The selection of the proper metal composition to resist a given corrosive medium and the choice of the proper heat-treatment and surface prepara-

tion of the material selected are not within the scope of this Division. This Appendix discusses some of the factors that should be considered in arriving at a proper selection.

UHA-101 Structure

The composition, mechanical working, heat-treatment cycle, and the solidification rate in castings and weld metal largely determine the degree to which ferrite, carbide, and sigma phases are formed in austenitic stainless steels. The type of structure and the thermal and mechanical treatment it receives are determining factors in its resistance to intergranular corrosion, stress-corrosion cracking, and crack-susceptibility, and in its ductility and toughness.

UHA-102 Intergranular Corrosion

When austenitic steels are held for a sufficient time between 800 F and 1600 F, chromium carbide tends to precipitate preferentially at austenite grain boundaries. This type of precipitation is referred to as sensitization. Intergranular corrosion takes place when a sensitized material is exposed to a sufficiently strong corrosive medium for a long enough time.

Methods for combating intergranular corrosion include the following:

(1) An anneal at 1850 F to 2050 F followed by rapid cooling through the sensitization range. Subsequent operation of a vessel in the sensitization range may resensitize the material.
(2) Stabilizing with columbium, titanium, or tantalum. These elements have a strong affinity for carbon and, in sufficient quantities, prevent the precipitation of chromium carbides.
(3) Use of types of steel having a low enough carbon content that the chromium depletion at the grain boundaries is kept within safe limits.

UHA-103 Stress-Corrosion Cracking

Austenitic chromium-nickel steels that are highly stressed in tension may develop transcrystalline or intercrystalline cracks when exposed to certain corrosive media. The stresses may be produced by external loads, by welding or cold-forming operations, or by uneven cooling. Methods of reducing susceptibility to stress-corrosion cracking include the selection of a composition that will have a stable austenite structure in the operating range and heat-treatment to reduce the magnitude of the residual stresses.

UHA-104 Formation of Sigma Phase

The existence of the sigma phase in an austenitic stainless steel may materially reduce its ductility and toughness. Under favorable conditions, the sigma phase is formed relatively slowly in the temperature range between 1050 F and 1700 F. Factors contributing to the formation of sigma phase include the presence of ferrite, prior cold-working, variation in composition due to progressive solidification, and the presence of ferritizers, particularly molybdenum, columbium, and titanium. Formation of sigma phase may be minimized or prevented by a proper selection of composition. Or the sigma may be transformed into austenite and ferrite by suitable heating and quenching.

UHA-105 Heat-Treatment of Austenitic Chromium-Nickel Steels

(a) In recognition of controversial opinion relative to the effects of postweld heat treatment of austenitic stainless steels, mandatory requirements for such have been omitted. Service experience is too limited to permit comparison between the relative safety of as-welded and postweld heat treated austenitic steel weldments, particularly in thick sections. It is recognized that the stability of austenitic steels and their optimum behavior in service are influenced by the mechanical and thermal treatment they have received; however, it is a basic principle that the Code rules are intended to provide minimum safety requirements for new construction, not to cover deterioration which may occur in service as a result of corrosion, instability of the material, or unusual operating conditions such as fatigue or shock loading.

(b) Where maximum corrosion resistance is required it is advisable to heat-treat in such a fashion as to place all chromium carbides in solution. For such service it is recommended that the following procedure be followed.

(1) Hold the vessel within the prescribed temperature range for not less than one hour per inch of thickness. Quench all parts of the vessel uniformly and as rapidly as possible. Material not stabilized with columbium or titanium should be cooled through the range from 1700 F to 1000 F in not more than three minutes. The rapid cooling should be continued to below 800 F. Slower cooling rates may be just as satisfactory for some compositions of the material and conditions of service.

UHA-106 Restricted Composition

For constructions involving heat-treatment within the sigma-formation range, a more restricted chemical composition is recommended for Type 316Cb, as follows:

Carbon	0.07 max.
Manganese	1.50 min.
Phosphorus	0.030 max.
Sulfur	0.030 max.
Silicon	0.75 max.
Nickel	13.00 to 15.00
Chromium	17.50 to 19.00
Molybdenum	2.00 to 2.50 (2.25 preferred)
Columbium or Columbium plus Tantalum	0.90 max. Min. not less than 9 times the carbon content.

UHA-107 Dissimilar Weld Metal

The difference between the coefficients of expansion of the base material and the weld should receive careful consideration before undertaking the welding of ferritic-type stainless steels with austenitic electrodes for services involving severe temperature conditions, particularly those of a cyclic nature.

UHA-108 Fabrication

It is recommended that the user of austenitic chromium-nickel steel vessels in corrosive service consider the following additional fabrication test.

A welded guided-bend test specimen should be made as prescribed in Par. Q-7 (2) of Section IX from one of the heats of material used in the shell. The test plate should be welded by the procedure used in the longitudinal joints of the vessel and should be heat-treated using the same temperature cycle as used for the vessel. The operations on the test plate should be such as to duplicate as closely as possible the physical conditions of the material in the vessel itself.

Grind and polish the specimen and immerse it for not less than 72 hours in a boiling solution consisting of 47 cc concentrated sulfuric acid and 13 g of crystalline copper sulfate ($CuSO_4$, $5H_2O$) per liter of water. Then bend the specimen so as to produce an elongation of not less than 20 per cent at a section in the base metal ¼ inch from the edge of the weld. The metal shall show no sign of disintegration after bending.

TABLE UHA-105
RECOMMENDED TEMPERATURE RANGES FOR HEAT TREATMENT

Type Number of Material	Heat-Treatment Procedure
301, 302, 304, 308, 309, 310	1850–2000 F
321, 347	1850–2000 F
316	1850–2050 F
309Cb, 310Cb, 316Cb	1850–1950 F

Part UCI
Requirements for Pressure Vessels Constructed of Cast Iron

GENERAL

UCI-1 Scope

The rules in Part UCI are applicable to pressure vessels and vessel parts that are constructed of cast iron, or of cast nodular iron having an elongation of less than 15 percent in 2 in., except standard pressure parts covered by Par. UG-11(b), and shall be used in conjunction with the general requirements in Subsection A and with the specific requirements in Part UR of Subsection B, *Requirements for Pressure Vessels Fabricated by Riveting*, insofar as these requirements are applicable to cast material.

UCI-2 Service Restrictions

Cast iron vessels shall not be used to contain lethal[1] or flammable substances, either liquid or gaseous.

[1] By "lethal substances" are meant poisonous gases or liquids of such a nature that a very small amount of the gas or vapor of the liquid mixed or unmixed with air is dangerous to life, when inhaled. For purposes of the Code this class includes substances of this nature which are stored under pressure or may generate a pressure if stored in a closed vessel. Some such substances are hydrocyanic acid, carbonyl chloride, cyanogen, mustard gas, and xylyl bromide. For design purposes under this Code, chlorine, ammonia, natural or manufactured gas, any liquefied petroleum gas (such as propane, butane, butadiene), and vapors of any other petroleum products are not classified as lethal substances.

UCI-3 Pressure-Temperature Limitations

(a) The design pressure for vessels and vessel parts constructed of any of the classes of cast iron listed in Table UCI-23 shall not exceed the following values except as provided in (b).

(1) 160 psi at temperatures not greater than 450 F for vessels containing gases, steam, or other vapors;

(2) 160 psi at temperatures not greater than 375 F for vessels containing liquids;

(3) 250 psi for liquids at temperatures less than their boiling point at design pressure, but in no case at temperatures exceeding 120 F;

(4) 300 psi at temperatures not greater than 450 F for bolted heads, covers, or closures that do not form a major component of the pressure vessel.

(b) Vessels and vessel parts constructed of stress-relief annealed material conforming to Classes 40, 50, and 60 of Specification SA-278 may be used for design pressures up to 250 psi at temperatures up to 650 F, provided the distribution of metal in the pressure-containing walls of the casting is shown to be approximately uniform.

(c) Cast iron flanges and flanged fittings conforming to USAS B16.1-1960, Cast Iron Pipe Flanges and Flanged Fittings, Class 125 and USAS B16.2-1960, Cast Iron Pipe Flanges and Flanged Fittings, Class 250 may be used in whole or in part of a pressure vessel for pressures not exceeding the USAS ratings at temperatures not exceeding 450 F.

MATERIALS

UCI-5 General

All cast iron material subject to stress due to pressure shall conform to one of the specifications given in Section II of the Code and shall be limited to those listed in Table UCI-23 except as otherwise provided in Par. UG-11.

UCI-12 Bolt and Rivet Materials

The requirements for bolts, rivet material, nuts, and washers shall be the same as for carbon and low-alloy steels in Pars. UCS-10 and UCS-11.

DESIGN

UCI-16 General

The rules in the following paragraphs apply specifically to the design of pressure vessels and vessel parts of cast iron and shall be used in conjunction with the general requirements for *Design* in Subsection A, and with the specific requirements for *Design* in Part UR, insofar as these requirements are applicable to cast materials.

UCI-23 Maximum Allowable Stress Values

(a) Table UCI-23 gives the maximum allowable stress values in tension at the temperatures indicated for castings conforming to the specifications listed therein.

(b) The maximum allowable stress value in bending shall be 1½ times that permitted in tension, and the maximum allowable stress value in compression shall be two times that permitted in tension.

UCI-28 Thickness of Shells Under External Pressure

(a) Cylindrical and spherical shells under external pressure shall be designed by the rules in Par. UG-28, using Fig. UCI-28.

(b) Examples illustrating the use of charts similar to Fig. UCI-28 are given in Appendix L.

UCI-32 Heads With Pressure on Concave Side

Heads with pressure on the concave side (plus heads) shall be designed in accordance with the formulas in Par. UG-32 using the maximum allowable stress value in tension.

TABLE UCI-23
MAXIMUM ALLOWABLE STRESS VALUES IN TENSION FOR CAST IRON, IN POUNDS PER SQUARE INCH

Specification Number	Class	Spec Min Tensile Strength	For Metal Temperatures Not Exceeding Degrees F Subzero to 450	650
SA-278	20	20,000	2000	....
SA-278	25	25,000	2500	....
SA-278	30	30,000	3000	....
SA-278	35	35,000	3500	....
SA-278	40	40,000	4000	4000
SA-278	50	50,000	5000	5000
SA-278	60	60,000	6000	6000
SA-476	80	80,000	8000	....

UCI-33 Heads With Pressure on Convex Side

The thickness of heads with pressure on the convex side (minus heads) shall not be less than the thickness required in Par. UCI-32 for plus heads under the same pressure nor less than 0.01 times the inside diameter of the head skirt.

UCI-35 Spherically Shaped Covers (Heads)

(a) Circular cast-iron spherically shaped heads with bolting flanges, similar to Fig. UA-6 (b), (c), and (d), shall be designed in accordance with the provisions in Par. UA-6, except as otherwise provided in this paragraph.

(b) Circular cast iron spherically shaped heads with bolting flanges shall be designed in accordance with the following requirements.

(1) The head thickness shall be determined in accordance with the requirements in Par. UG-32.

(2) The spherical and knuckle radii shall conform to the requirements in Par. UG-32.

(3) Cast iron flanges and flanged fittings conforming to USAS B16.1-1960, Cast Iron Pipe Flanges and Flanged Fittings, Class 125 and USAS B16.2-1960, Cast Iron Pipe Flanges and Flanged Fittings, Class 250 may be used in whole or in part of a pressure vessel for pressures not exceeding the USAS ratings at temperatures not exceeding 450 F. Other flanges may be designed in accordance with the provisions of Appendix II using the allowable stress values in bending.

Alternatively, the maximum allowable working pressure of cast-iron dished covers with bolting flanges, with or without nozzles or internal ribs, may be established in accordance with the provisions of Par. UCI-101.

UCI-36 Openings and Reinforcements

(a) The dimensional requirements in Pars. UG-36 through UG-46 are applicable to cast iron and shall be used in the design of openings and reinforcements in vessels and vessel parts except that in no case shall the thickness of the reinforcement exceed twice the thickness of the vessel wall.

(b) Cast-iron flanges, nozzles, and opening reinforcements which enter into the design calculations of the completed vessel or vessel part, shall be cast integrally with the vessel or vessel part.

(c) Cast-iron flanges, nozzles, and opening reinforcements, when attached to steel or nonferrous vessels, shall not be considered as contributing to the strength of the vessels.

UCI-37 Corners and Fillets

A liberal radius shall be provided at projecting edges and reentrant corners in accordance with good foundry practice. Abrupt changes in surface contour and in wall thickness at junctures shall be avoided. Fillets and transition sections between adjacent main pressure containment walls or integral attachments thereto, such as nozzles, lugs, supports, flanges, and bosses, shall have radii or the equivalent not less than one-half of the thickness of the thinner of the sections being joined. Basic design, grade of iron, and other factors entering into the production of castings may require increased filleting over the minimum specified in order to provide the desired soundness of material.

FABRICATION

UCI-75 General

The rules in the following paragraphs apply specifically to the fabrication of pressure vessels and vessel parts of cast iron and shall be used in conjunction with the general requirements for *Fabrication* in Subsection A and with the specific requirements for *Fabrication* in Part UR, insofar as these requirements are applicable to cast materials.

UCI-78 Repair of Defects in Materials

(a) Surface imperfections in vessels and pressure parts that are to operate within the limitations given in Par. UCI-3 (a) (1), (2), and (4) may be repaired by plugging provided the depth of the plug is not greater than 20 per cent of the thickness of the section and the diameter of the plug is not greater than its thickness. Except as limited in (c), repair by welding is not permitted.

(b) Seepage around chaplets in vessels and pressure parts that are to operate within the limitations given in Par. UCI-3 (a) (1), (2), and (4) may be repaired by plugging, provided the following requirements are met:

(1) No welding is performed;

(2) The diameter of the plug is not greater than its thickness;

(3) The metal surrounding the defect is shown to be sound by radiographic examination;

(4) The part after repair meets the standard hydrostatic test prescribed in Par. UCI-99.

(c) Surface imperfections and defects in materials in vessels and pressure parts that are to operate within the limitations given in Par. UCI-3 (a) (3) may be repaired using methods and procedures that are consistent with safe practice. Where welding is used, the weld and the metal adjacent to it must be free of cracks when examined by the magnetic-particle or liquid penetrant examination method of testing for cracks.

INSPECTION AND TESTS

UCI-90 General

The rules in the following paragraphs apply specifically to the inspection and testing of pressure vessels and vessel parts of cast iron and shall be used in conjunction with the general requirements for *Inspection and Tests* in Subsection A and the specific requirements for *Inspection and Tests* in Part UR, insofar as these requirements are applicable to cast material.

UCI-99 Standard Hydrostatic Test

Cast-iron pressure vessels shall be hydrostatically tested by the method prescribed in Par.

UG-99 except that the test pressure shall be two times the maximum allowable working pressure to be marked on the vessel for maximum allowable working pressures greater than 30 psi and 2½ times the maximum allowable working pressure but not to exceed 60 psi for maximum allowable working pressures under 30 psi.

UCI-101 Hydrostatic Test to Destruction

(a) The maximum allowable working pressure of identical cast iron vessels or vessel parts, based on testing one of them to destruction, limited to the service conditions specified in Par. UCI-3 and in accordance with Par. UG-101(m) shall be:

$$P_R = \frac{P_B}{6.67} \times \frac{\text{(Specified Minimum Tensile Strength)}}{\left(\begin{array}{c}\text{Minimum Tensile Strength of}\\ \text{Associated Arbitration Bar}\end{array}\right)}$$

where P_R = maximum allowable working pressure at operating temperatures listed in Table UCI-23 in pounds per square inch,

P_B = destruction test pressure in pounds per square inch.

The principle of Par. UG-101(c) shall be followed.

NOTE: It is assumed that failure will occur in bending.

(b) All vessels or vessel parts of the same material, design, and construction, whose maximum allowable working pressure is based on a test to destruction of a sample vessel in accordance with (a) above, shall be considered to have a design pressure equal to the maximum allowable working pressure thus determined, except as limited by the rules of Par. UCI-3, and shall be subjected to a hydrostatic test pressure in conformity with the rules of Par. UCI-99.

STAMPING AND REPORTS

UCI-115 General

The provisions for stamping and reports in Pars. UG-115 through UG-120 shall apply without supplement to vessels constructed of cast iron.

PRESSURE-RELIEF DEVICES

UCI-125 General

The provisions for pressure-relief devices in Pars. UG-125 through UG-134 shall apply without supplement to vessels constructed of cast iron.

Part UCL
Requirements for Welded Pressure Vessels Constructed of Integrally Clad Plate or With Applied Corrosion-Resistant Linings

GENERAL

UCL-1 Scope

The rules in Part UCL are applicable to pressure vessels or vessel parts that are constructed of integrally clad plate, and to vessels and vessel parts that are fully or partially lined inside or outside with corrosion-resistant plate, sheet, or strip, attached by welding to the base plates before or after forming or to the shell, heads, and other parts during or after assembly into the completed vessel.[1] These rules shall be used in conjunction with the general requirements in Subsection A and with the specific requirements in the applicable Parts of Subsection B.

UCL-2 Methods of Fabrication

Vessels and vessel parts of integrally clad construction shall be fabricated by welding. Corrosion-resistant linings may be attached by welding to vessels fabricated by any method of construction permitted under the rules of this section.

[1] See Par. UA-60 – *Definitions*.

UCL-3 Conditions of Service

Specific chemical compositions, heat-treatment procedures, fabrication requirements, and supplementary tests may be required to assure that the vessel will be suitable for the intended service. This is particularly true for vessels subject to severe corrosive conditions, and also those operating in a cyclic temperature service. These rules do not indicate the selection of an alloy suitable for the intended service or the amount of the corrosion allowance to be provided.

It is recommended that users assure themselves by appropriate tests, or otherwise, that the alloy material selected and its heat-treatment during fabrication will be suitable for the intended service. Where service data are not available, it is recommended that service inspection be made at frequent intervals until the nature and rate of corrosion and extent of metal distortion or other forms of deterioration in service can be definitely established. The data thus secured should determine the subsequent intervals between service inspection and the probable safe operating life of the vessel.

NOTE: Attention is called to the difficulties that have been experienced in welding materials differing greatly in chemical composition. Mixtures of uncertain chemical composition and physical properties are produced at the line of fusion. Some of these mixtures are brittle and may give rise to cracks during solidification or afterwards. To avoid weld-embrittlement, special care is required in the selection of lining material and welding electrodes, and in the application of controls over the welding process and other fabrication procedures.

MATERIALS

UCL-10 General

The base plate and other base materials used in the construction of vessels of integrally clad plate and of those having applied corrosion linings shall comply with the requirements for materials given in Pars. UCS-5, UHA-11, or UNF-5.

UCL-11 Clad Plate

(a) Clad plate used in constructions in which the design calculations are based on the total thickness including cladding (see Par. UCL-23(c)) shall conform to one of the following specifications:

SA-263 Specification for Corrosion-Resisting Chromium-Steel Clad Plate, Sheet and Strip

SA-264 Specification for Corrosion-Resisting Chromium-Nickel Steel Clad Plate, Sheet and Strip

SA-265 Specification for Nickel and Nickel-Base Alloy Clad Steel Plate.

(b) Clad plate used in constructions in which the design calculations are based on the clad-plate thickness, exclusive of the thickness of the cladding material, may consist of any base-plate material satisfying the requirements of Par. UCL-10 and any metallic cladding material of weldable quality that in the judgment of the user is suitable for the intended service.

(c) Integrally clad steel plates in which any part of the cladding is included in the design calculations, as permitted in Par. UCL-23(c), shall show a minimum shear strength of 20,000 psi when tested in the manner described in the plate specification. One shear test shall be made on each such clad plate as rolled and the results shall be reported by the mill.

(d) When any part of the cladding thickness is specified as an allowance for corrosion, such added thickness shall be removed before mill tension tests are made. When corrosion of the cladding is not expected, no part of the cladding need be removed before testing, even though excess thickness seems to have been provided or is available as corrosion allowance.

UCL-12 Lining

Material used for applied corrosion-resistant lining may be any metallic material of weldable quality that in the judgment of the user is suitable for the intended purpose.

DESIGN

UCL-20 General

(a) The rules in the following paragraphs apply specifically to pressure vessels and vessel parts constructed of integrally clad plate and those having applied corrosion-resistant linings and shall be used in conjunction with the general requirements for *Design* in Subsection A, and with the specific requirements for *Design* in Subsection B that pertain to the method of fabrication used.

(b) *Minimum Thickness of Plate* The minimum thickness specified in Par. UCS-16(b) shall be the total thickness for clad construction and the base-plate thickness for applied-lining construction.

UCL-23 Maximum Allowable Stress Values

(a) *Applied Corrosion-Resistant Linings* The

thickness of material used for applied lining shall not be included in the computation for the required wall thickness of any lined vessel. The maximum allowable stress value shall be that given for the base material in Table UCS-23, UHA-23, or UNF-23.

(b) *Integrally Clad Plate Without Credit for Full Cladding Thickness* Except as permitted in (c), design calculations shall be based on the total thickness of the clad plate less the specified nominal minimum thickness of cladding. A reasonable excess thickness either of the actual cladding or of the same thickness of corrosion-resistant weld metal may be included in the design calculations as an equal thickness of base-plate. The maximum allowable stress value shall be that given for the base-plate material in Table UCS-23, UHA-23, or UNF-23.

(c) *Integrally Clad Plate With Credit for Cladding Thickness* When clad plate conforms to one of the specifications listed in Par. UCL-11 (a), and the joints are completed by depositing corrosion-resisting weld metal over the weld in the base plate to restore the cladding, the design calculations may be based on a thickness equal to the nominal thickness of the base plate plus S_c/S_b times the nominal thickness of the cladding after any allowance provided for corrosion has been deducted.

Where

S_c = maximum allowable stress value for the cladding at the design temperature, psi

S_b = maximum allowable stress value for the base plate at the design temperature, psi

Where S_c is greater than S_b, the multiplier S_c/S_b shall be taken equal to unity. The maximum allowable stress value shall be that given for the base-plate material in Table UCS-23. Vessels in which the cladding is included in the computation of wall thickness shall not be constructed for internal pressure under the provisions of Table UW-12, Column (c).

UCL-24 Maximum Allowable Working Temperature

(a) When the design calculations are based on the thickness of base plate exclusive of lining or cladding thickness, the maximum service metal temperature of the vessel shall be that allowed for the base-plate material.

(b) When the design calculations are based on the full thickness of clad plate as permitted in Par. UCL-23 (c), the maximum service metal temperature shall be the lower of the values allowed for the base-plate material in Table UCS-23 and the cladding material in Tables UHA-23 or UNF-23.

(c) The use of cladding or lining material of chromium-alloy stainless steel with a chromium-content of over 14 per cent is not recommended for service metal temperatures above 800 F.

UCL-25 Corrosion of Cladding or Lining Material

(a) When corrosion or erosion of the cladding or lining material is expected, the cladding or lining thickness shall be increased by an amount that in the judgment of the user will provide the service life that he desires.

(b) *Telltale Holes* When telltale holes are used in clad or lined vessels, they shall have a depth not less than 80 per cent of the thickness required for a seamless shell of like dimensions, or they may extend to the cladding or lining.

UCL-26 Thickness of Shells and Heads Under External Pressure

The requirements for the thickness of shells under external pressure in Par. UCS-28, UHA-28, or UNF-28 and of heads under external pressure in Par. UCS-33, UHA-31 or UNF-33 shall apply to pressure vessels of clad or lined plate. The cladding may be included in the design calculations for clad plate to the extent provided in Par. UCL-23 (b) and (c).

UCL-27 Low-Temperature Operations

The base materials used in the construction of vessels to operate below –20 F shall satisfy the requirements of Pars. UCS-66, UCS-67, UHA-51 or UNF-65.

FABRICATION

UCL-30 General

The rules in the following paragraphs apply specifically to pressure vessels and vessel parts constructed of integrally clad plate and those having applied corrosion-resistant linings and shall be used in conjunction with the general requirements for *Fabrication* in Subsection A, and with the specific requirements for *Fabrication* in Subsection B that pertain to the method of fabrication used.

UCL-31 Joints in Cladding and Applied Linings

The types of joints and welding procedure used shall be such as to minimize the formation of brittle weld composition by the mixture of metals of corrosion-resistant alloy and the base material.

NOTE: Because of the different thermal coefficients of expansion of dissimilar metals, caution should be exercised in design and construction under the provisions of these paragraphs in order to avoid difficulties in service under extreme temperature conditions, or with unusual restraint of parts such as may occur at points of stress concentration.

UCL-32 Weld-Metal Composition

Welds that are exposed to the corrosive action of the contents of the vessel should have a resistance to corrosion that is not substantially less than that of the corrosion-resistant cladding or lining. The use of filler metal that will deposit weld metal with practically the same composition as the material joined is recommended. Weld metal of different composition may be used provided it has better mechanical properties in the opinion of the manufacturer, and the user is satisfied that its resistance to corrosion is satisfactory for the intended service. The columbium content of columbium-stabilized austenitic stainless-steel weld metal shall not exceed 1.00 per cent, except when a higher columbium content is permitted in the material being welded.

UCL-33 Inserted Strips in Clad Material

The thickness of inserted strips used to restore cladding at joints shall be equal to that of the nominal minimum thickness of cladding specified for the plates backed, if necessary, with corrosion-resistant weld metal deposited in the groove to bring the insert flush with the surface of the adjacent cladding.

UCL-34 Postweld Heat Treatment[1]

(a) Vessels or parts of vessels constructed of integrally clad or applied corrosion-resistant lining material shall be postweld heat treated when the base plate is required to be postweld heat treated. In applying these rules the determining thickness shall be the total thickness of integrally clad plate and the base plate thickness of plate having applied corrosion-resistant lining.

(b) Vessels or parts of vessels constructed of chromium-alloy stainless-steel clad plate and those lined with chromium-alloy stainless-steel applied linings shall be postweld heat treated in all thicknesses, except vessels that are clad or lined with Type 405 or Type 410S and welded with an austenitic electrode or non-air-hardening nickel-chromium-iron electrode need not be postweld heat treated unless required by (a).

UCL-35 Radiographic Examination

(a) *General* Vessels or parts of vessels constructed of clad plate and those having applied corrosion-resistant linings shall be radiographed when required by the rules in Pars. UW-11 (a), UCS-57, and UCL-36. The plate thickness specified under these rules shall be the total plate thickness for clad construction and the base plate thickness for applied-lining construction.

(b) *Base Plate Weld Protected by a Strip Covering.* When the base-plate weld in clad or lined construction is protected by a covering strip or sheet of corrosion-resistant material applied over the weld in the base plate to complete the cladding or lining, any radiographic examination required by the rules of Pars. UW-11 (a) and UCS-57 may be made on the completed weld in the base plate before the covering is attached.

(c) *Base Plate Weld Protected by an Alloy Weld.* The radiographic examination required by the rules in Pars. UW-11 (a) and UCS-57 shall be made after the joint, including the corrosion-resistant layer, is complete, except that the radiographic examination may be made on the weld in the base plate before the alloy cover weld is deposited, provided the following requirements are met:

(1) The thickness of the base plate at the welded joint is not less than that required by the design calculation.

(2) The corrosion-resistant alloy weld deposit is non-air-hardening.

(3) The completed alloy weld deposit is spot examined by any method that will detect cracks.

UCL-36 Examination of Chrome-Alloy Cladding or Lining

The alloy weld joints between the edges of adjacent chromium-alloy cladding layers or liner sheets shall be examined for cracks as follows:

(1) Joints welded with straight chromium-alloy filler metal shall be examined throughout their full length. The examination shall be by radiographic methods when the chromium-alloy welds are in continuous contact with the welds in the base metal. Liner welds that are attached to the base metal, but merely cross the seams in the base metal, may be examined by any method that will disclose surface cracks.

(2) Joints welded with austenitic chromium-nickel steel filler metal or non-air-hardening nickel-chromium-iron filler metal shall be given a radiographic spot examination in accordance with Paragraph UW-52. For lined construction, at least one spot examination shall include a portion of the liner weld that contacts weld metal in the base plate.

UCL-40 Qualification of Welding Procedure

(a) The specification of the welding procedure that is proposed to be followed in clad or lined

[1] CAUTION: Postweld heat treatment may be in the carbide-precipitation range for unstabilized austenitic chromium-nickel steels, as well as within the range where a sigma phase may form, and if used indiscriminately could result in material of inferior physical properties and inferior corrosion resistance, which ultimately could result in failure of the vessel.

construction shall be recorded in detail.

(b) The procedure shall be qualified in accordance with the provisions of Section IX of the Code except as these provisions are modified in the following paragraphs. This qualified Procedure Specification shall be followed in construction.

UCL-41 Groove Welds in Clad Plate

(a) The requirements in Section IX for procedure qualification shall be modified as follows for groove welds in clad plate.

(1) The requirements in Items V1 and V2 of Pars. Q-11 and QN-11 shall apply separately to the base plate and to the cladding.

(2) The thicknesses specified in Par. Q-13 and Table Q-13 shall apply to the total thickness of clad plate.

(3) For material not included in Table Q-11.1, the material used in the test plate shall be within the range of chemical composition of that to be used in construction.

(b) The welding procedure for groove welds in integrally clad plate shall be qualified as provided in (a) when any part of the cladding thickness of the clad plate is included in the design calculations in accordance with Par. UCL-23 (c). When the cladding thickness is not included in the design calculations, the procedure for groove welds may be qualified as in (a), or the weld in the base plate joint may be qualified by itself in accordance with the rules in Section IX and the weld in the cladding joint by itself in accordance with Par. UCL-43.

UCL-42 Alloy Welds in Base Metal

Groove joints in base-metal plates and parts may be made with corrosion-resistant alloy-steel filler metal, or groove joints may be made between corrosion-resistant alloy steel and carbon or low-alloy steel, provided the welding procedure and the welders have been qualified in accordance with the requirements of Section IX for the combination of materials used. Some applications of this rule are base metal welded with alloy-steel electrodes, and alloy nozzles welded to steel shells.

UCL-43 Corrosion-Resistant Weld Deposits

Construction in which deposits of corrosion-resistant alloy weld metal are applied as a protective covering on the surface of base-metal plates and parts and over welded base-metal joints, whether adjacent or not to the edges of lining sheets or cladding material, shall be qualified in accordance with the following rules:

(1) The qualification test plate shall consist of a base plate not less than 6 in. long, 3 in. wide, and ¼ in. thick, to which are clamped or bonded two strips of lining or cladding material separated by a gap left in the lining or a groove cut in the cladding. The gap or groove shall run lengthwise of the test plate, approximately midway of the plate width. The nominal thickness of the lining or cladding shall be within 20 per cent plus or minus of the thickness to be used in construction.

(2) The requirements in Items V1 and V2 of Pars. Q-11 and QN-11 shall apply separately to the base plate and the lining or cladding. For material not included in Table Q-11.1, the material used in the test plate shall be within the range of chemical composition of that to be used in construction.

(3) The width of gap shall be not less than twice the nominal thickness of the lining or cladding and not less than the maximum gap to be used in construction but need not be greater than ¾ in. in order to qualify welding procedures in which corrosion-resistant weld metal is deposited in contact with base metal and adjacent lining or cladding material on two sides of a gap, as in welding the joints in liner sheets or clad plates.

(4) The width of gap shall be not less than ¾ in. in order to qualify welding procedures in which corrosion-resistant weld metal is deposited in contact with base-metal with lining or cladding material on one side only, as in layering corrosion-resistant weld metal on flange facings, or in making fillet welds.

(5) The weld joint shall be made between the edges of the lining or cladding material by the procedure to be used in construction. The cooling of the test plate and any subsequent heat-treatment shall follow the procedure to be used in construction.

(6) The tests to qualify the welding procedure shall be performed on two longitudinal bend test specimens that conform to the dimensions and other requirements of Par. Q-7 and Fig. Q-7.3 of Section IX. The specimens shall be tested in accordance with, and meet the requirements of Par. Q-8.

UCL-44 Attachment of Applied Linings

(a) Applied linings may be attached to the base plate and other parts by any methods and processes of welding that are not excluded by the rules of this Division. The welding procedure to be used in attaching applied linings to base-plates and the method of determining the security of the attachment shall be a matter for agreement between the user and the manufacturer.

(b) Each welding procedure to be used for attaching lining material to the base plate shall be qualified on lining-attachment welds made in the form and arrangement to be used in construction and with materials that are within the range of chemical composition of the material to be used, respectively, for the base plate, the linings, and the weld metal. Welds shall be made in each of the positions defined in Par. Q-3 that are to be used in construction. One specimen from each position to be qualified shall be sectioned, polished, and etched to show clearly the demarcation between the fusion zone and the base metal. For the procedure to qualify, the specimen shall show, under visual examination without magnification, complete fusion in the fusion zone and complete freedom from cracks in the fusion zone and in the heat-affected metal.

UCL-45 Performance Qualification of Welders

(a) *General* A welder who has passed a test on composite welds in clad plate as provided in (b) or as part of a procedure qualification test as provided in Par. UCL-41 (a), is qualified for welding base metal and lining or cladding material separately. Likewise, a welder, who has qualified on base metal and lining or cladding material separately, is qualified to make composite welds. Qualification on both base-plate and lining or cladding material is required only of welders who weld both materials.

(b) *Composite Welds* Performance-qualification tests shall be made in accordance with Section IX by preparing test plates from clad material having the same P-Numbers in Table Q-11.1 as that of the base plate and cladding material to be used in construction, and having the same F-Number in Table Q-22 as the filler metal that will be used in construction. When the cladding material is not listed in Table Q-11.1, qualification shall be made on the same grade as used in the vessel. Heat-treatment is not required but is permitted if the welder's work on construction is to be heat-treated.

(c) *Corrosion-Resistant Welds* Performance qualification tests for welding corrosion-resistant materials shall be the same as the procedure qualification tests described in Par. UCL-40.

UCL-46 Fillet Welds

Fillet welds of corrosion-resistant metal deposited in contact with two materials of dissimilar composition may be used for shell joints under the limitations of Par. UW-12, for connection attachments under the limitations of Pars. UW-15 and UW-16, and for any other uses permitted by this Division. The qualification of the welding procedures and welders to be used on fillet welds for a given combination of materials and alloy weld metal shall be made in accordance with Par. UCL-43, or alternatively by the rules prescribed in Section IX.

INSPECTION AND TESTS

UCL-50 General

The rules in the following paragraphs apply specifically to the inspection and testing of pressure vessels and vessel parts constructed of integrally clad plate and those having applied corrosion-resistant linings and shall be used in conjunction with the general requirements for *Inspection and Tests* in Subsection A, and with the specific requirements for *Inspection and Tests* in Subsection B that pertain to the method of fabrication used.

UCL-51 Tightness of Applied Lining

A test for tightness of the applied lining that will be appropriate for the intended service is recommended, but the details of the test shall be a matter for agreement between the user and the manufacturer. The test should be such as to assure freedom from damage to the load-carrying base plate. When rapid corrosion of the base plate is to be expected from contact with the contents of the vessel, particular care should be taken in devising and executing the tightness test.

Following the hydrostatic-pressure test, the interior of the vessel shall be inspected to determine if there is any seepage of the test fluid through the lining. Seepage of the test fluid behind the applied lining may cause serious damage to the liner when the vessel is put in service. When seepage occurs, Par. UA-173 shall be considered and the lining shall be repaired by welding. Repetition of the radiography, the heat-treatment, or the hydrostatic test of the vessel after lining repairs is not required except when there is reason to suspect that the repair welds may have defects that penetrate into the base plate, in which case the inspector shall decide which one or more shall be repeated.

UCL-52 Hydrostatic Test

The requirements for standard hydrostatic test in Par. UG-99 shall apply to pressure vessels fabricated in accordance with the rules of Part UCL.

STAMPING AND REPORTS

UCL-55 General

The provisions for stamping and reports in Pars. UG-115 through UG-120 shall apply to vessels

that are constructed of integrally clad plates and those having applied corrosion-resistant linings, with the following supplements to the data reports.

(a) Include specification and type of lining material.

(b) Include applicable paragraph in UCL-23 under which the shell and heads were designed.

PRESSURE-RELIEF DEVICES

UCL-60 General

The provisions for pressure-relief devices given in Pars. UG-125 through UG-134 shall apply without supplement to welded vessels that are constructed of integrally clad plate and those having applied corrosion-resistant linings.

Part UCN

Requirements for Pressure Vessels Constructed of Cast Nodular Iron

GENERAL

UCN-1 Scope

The rules in Part UCN are applicable to pressure vessels and pressure vessel parts that are constructed of cast nodular iron[1], and shall be used in conjunction with the general requirements in Subsection A and with the specific requirements in Part UR of Subsection B, *Requirements for Pressure Vessels Fabricated by Riveting,* insofar as these requirements are applicable to cast material.

UCN-2 Service Restrictions

Cast nodular iron pressure vessels or pressure vessel parts shall not be used to contain lethal[2] substances, either liquids or gases.

UCN-3 Pressure-Temperature Limitations

(a) The design pressure for pressure vessels and pressure vessel parts constructed of cast nodular iron of the type listed in Table UCN-23 shall not exceed 1000 psi nor shall the material be subjected to operating temperatures higher than 650 F nor less than –20 F.

(b) Cast nodular iron flanges and fittings conforming in dimension to the several USA Standards for carbon steel pipe flanges and flanged fittings given in USAS B16.5-1961 may be used in whole or as a part of a pressure vessel for pressures not exceeding 80 per cent of the USA Standard pressure ratings for carbon steel at their listed temperatures provided the temperature is not less than –20 F nor greater than 650 F and provided that the adjusted service pressure does not exceed 1000 psi.

NOTE: Cast nodular iron flanges and fittings conforming in dimension to the 125 and 250 pound USA Standards for cast iron flanges and fittings may be used in whole or as a part of pressure vessel for pressures not exceeding 80 per cent of the USA Standard pressure ratings for 150 and 300 pound carbon steel flanges and fittings respectively at their listed temperature provided the temperature is not less than –20 F nor greater than 650 F, except that the 3½ in. and smaller screwed and lapped flanges conforming in dimensions to the 125 lb USAS B16.1-1960 for cast iron flanged fittings, shall have identical ratings specified in USAS B16.1-1960.

MATERIALS

UCN-5 General

All cast nodular iron material subject to stress due to pressure shall conform to the specifications given in Section II of the Code and shall be limited to the stress values listed in Table UCN-23 except as otherwise provided in UG-11.

[1] It is the intent that cast nodular irons with an elongation of less than 15 percent in 2 in. be treated as cast iron and that vessels or pressure parts of such material be designed and fabricated in accordance with the rules in Part UCI.

[2] By "lethal substances" are meant poisonous gases or liquids of such a nature that a very small amount of the gas or of the vapor of the liquid mixed or unmixed with air is dangerous to life when inhaled. For purposes of the Code this class includes substances of this nature which are stored under pressure or may generate a pressure if stored in a closed vessel. Some such substances are hydrocyanic acid, carbonyl chloride, cyanogen, mustard gas, and xylyl bromide. For design purposes under this Code, chlorine, ammonia, natural or manufactured gas, any liquefied petroleum gas (such as propane, butane, butadiene), and vapors of any other petroleum products are not classified as lethal substances.

UCN-12 Bolt and Rivet Materials

The requirements for bolts, rivet materials, nuts, and washers shall be the same as for carbon and low-alloy steels in Par. UCS-10 and UCS-11.

DESIGN

UCN-16 General

The rules in the following paragraphs apply specifically to the design of pressure vessels and pressure vessel parts of cast nodular iron and shall be used in conjunction with the general requirements for *Design* in Subsection A and with the specific requirements for *Design* in Part UR, insofar as these requirements are applicable to cast materials.

UNC-23 Maximum Allowable Stress Values

Table UCN-23 gives the maximum allowable stress values at the temperatures indicated for castings conforming to the specification listed therein. These stress values shall be limited to the stress values in Table UCN-23 multiplied by the applicable casting quality factor given in Par. UG-24.

UCN-28 Thickness of Shells Under External Pressure

(a) Cylindrical and spherical shells under external pressure shall be designed by the rules in Par. UG-28 using Fig. UCN-28.

(b) Examples illustrating the use of charts similar to Fig. UCN-28 are given in Appendix L.

TABLE UCN-23

MAXIMUM ALLOWABLE STRESS VALUES IN TENSION FOR CAST NODULAR IRON, PSI

Spec No.	Class	Note	Spec Min Tensile Strength[a]	For Metal Temp Not Exceeding Deg F −20 to 650
SA-395	....	(1)	60,000	12,000

[a] The yield stresses in compression and tension for cast nodular iron are not sufficiently different to justify an increase in the allowable stress for bending except as permitted in Par. UA-50(a).

NOTES: (1) To these stress values, a quality factor as specified in Par. UG-24 shall be applied.

UCN-32 Heads With Pressure on Concave Side

Heads with pressure on the concave side (plus heads) shall be designed in accordance with the formulas in Par. UG-32.

UCN-33 Heads With Pressure on Convex Side

The thickness of heads with pressure on the convex side (minus heads) shall not be less than the thickness required in Par. UG-33.

UCN-35 Spherically Shaped Covers (Heads)

(a) Circular cast nodular iron spherically shaped heads with bolting flanges, similar to Fig. UA-6(b), (c), and (d) shall be designed in accordance with the provisions in Par. UA-6, except that corners and fillets shall comply with the requirements of Par. UCN-37.

(b) Circular cast nodular iron spherically shaped heads with bolting flanges other than those described in (a) shall be designed in accordance with the following requirements:

(1) The head thickness shall be determined in accordance with the requirements in Par. UG-32.

(2) The spherical and knuckle radii shall conform to the requirements in Par. UG-32.

(3) Flanges made of cast nodular iron in compliance with SA-395 and conforming in dimensions to the USA Standard for carbon steel given in USAS B16.5-1961 may be used at pressures not exceeding 80 per cent of the pressures permitted in those standards at their listed temperatures provided the temperature is not less than –20 F nor greater than 650 F and provided that the adjusted service pressure does not exceed 1000 psi.

NOTE: Cast nodular iron flanges conforming in dimension to the 125- and 250-lb USA Standards for cast iron flanges may be used for pressures not exceeding 80 per cent of the USA Standard pressure ratings for 150- and 300-lb carbon steel flanges, respectively, at their listed temperatures provided the temperature is not less than –20 F nor greater than 650 F, except as in note to UCN-3(b).

UCN-36 Openings and Reinforcements

(a) The dimensional requirements in Pars. UG-36 through UG-46 are applicable to cast nodular iron and shall be used in the design of openings and reinforcements in pressure vessels and pressure vessel parts which are cast integrally with the vessel or vessel part. In no case shall the thickness of the reinforcement, including the actual thickness of the vessel wall, exceed twice the actual thickness of the vessel wall.

(b) Cast nodular iron flanges, nozzles, and opening reinforcements may be attached to steel or nonferrous pressure vessels or pressure parts by the use of mechanical fastenings and may be considered to contribute strength to the vessel in compliance with Pars. UR-23, UR-24, and UR-25. They shall not be attached by welding or brazing.

(c) Cast nodular iron flanges, nozzles, and other pressure parts may be attached to cast iron

pressure vessels or pressure vessel parts by the use of mechanical fastenings in compliance with Pars. UR-23, UR-24, and UR-25. They shall not be considered to contribute strength to the pressure vessel or pressure vessel part nor shall they be attached by welding or brazing.

UCN-37 Corners and Fillets

A liberal radius shall be provided at projecting edges and in reentrant corners in accordance with good foundry practice. Abrupt changes in surface contour and in wall thickness at junctures shall be avoided. Fillets shall conform to the following:

(1) Fillets forming the transition between the pressure-containing walls and integral attachments such as brackets, lugs, supports, nozzles, flanges, and bosses shall have a radius not less than one-half the thickness of the pressure-containing wall adjacent to the attachment.

(2) Transitions between pressure-containing walls of different contours shall have a radius not less than three times the thickness of the thinner wall.

FABRICATION

UCN-75 General

The rules in the following paragraphs apply specifically to the fabrication of pressure vessels and pressure vessel parts of cast nodular iron and shall be used in conjunction with the general requirements for *Fabrication* in Subsection A and with the specific requirements for *Fabrication* in Part UR, insofar as these requirements are applicable to cast materials.

UCN-78 Repair of Defects in Materials

Imperfections in pressure vessels and pressure vessel parts that are to operate within the limitations of Par. UCN-3 (a) may be repaired by plugging, providing the following requirements are met:

(1) No welding is performed.

(2) The diameter of the plug shall not exceed the diameter of a standard 2 in. IPS pipe plug.

(3) The plugs where practical shall conform in all dimensions to standard IPS pipe plugs, and in addition they shall have full thread engagement corresponding to the thickness of the repaired section. Where a tapered plug is impractical because of excess wall thickness in terms of plug diameter and coincident thread engagement, other types of plugs may be used provided both full thread engagement and effective sealing against pressure are obtained. Where possible the ends of the plug should be ground smooth after installation to conform to the inside and outside contours of the walls of the pressure vessel or pressure part.

(4) The material from which the plug is manufactured shall conform in all respects to the materials specification which applies to the pressure vessel or pressure vessel part.

(5) The machined surface of the drilled or bored hole shall be free from visual defects and the adjacent metal shown to be sound by radiographic examination.

(6) The thickness of any repaired section in relation to the size of plug used shall not be less than that given in Table UCN-78.1.

(7) The minimum radius of curvature of repaired sections of cylinders or cones in relation to the size of plug used shall not be less than that given in Table UCN-78.2

(8) A repaired area may consist of a maximum of three plugs with a spacing such that the ligaments between adjacent plugs shall not be less than listed in Table UCN-78.3. Other defective areas may also be repaired by plugging in the same manner provided the minimum ligament between plugs in adjacent areas is not less than twice the values listed in Table UCN-78.3.

(9) Surface imperfections in pressure vessels and pressure vessel parts that are to operate within the limitations given in Par. UCN-3 (a) may be repaired by plugging provided the depth of the plug is not greater than 20 per cent of the thickness of the section and provided the diameter of the plug is not greater than its engaged length.

(10) The pressure vessel or pressure vessel part meets the standard hydrostatic test prescribed in Par. UCN-99.

TABLE UCN-78.1

IPS Plug or Equivalent, In.	Min. Thickness of Repaired Section, In.
⅛	11/32
¼	7/16
⅜	½
½	21/32
¾	¾
1	13/16
1¼	⅞
1½	15/16
2	1

TABLE UCN-78.2

IPS Plug or Equivalent, In.	Minimum Radius of Curvature of Cylinder or Cone, In.
⅛	9/16
¼	11/16
⅜	1 1/16
½	1¼
¾	2
1	2½
1¼	4
1½	5¼
2	8⅛

TABLE UCN-78.3

MINIMUM LIGAMENT BETWEEN PLUGS[a]

IPS Plug or Equivalent In.	⅛, ¼, ⅜	½, ¾	1, 1¼	1½, 2
⅛, ¼, ⅜	2⅝	4⅛	6⅝	9½
½, ¾	4⅛	4⅛	6⅝	9½
1, 1¼	6⅝	6⅝	6⅝	9½
1½, 2	9½	9½	9½	9½

[a] Based on a minimum efficiency of 80 per cent.

INSPECTION AND TESTS

UCN-90 General

The rules in the following paragraphs apply specifically to the inspection and testing of pressure vessels and pressure vessel parts of cast nodular iron and shall be used in conjunction with the general requirements of *Inspection and Tests* in Subsection A and the specific requirements for *Inspection and Tests* in Part UR, insofar as these requirements are applicable to cast material.

UCN-99 Standard Hydrostatic Test

Cast nodular iron pressure vessels and pressure vessel parts shall be hydrostatically tested by the method prescribed in Par. UG-99 except that the test pressure shall be two times the maximum allowable working pressure.

UCN-101 Hydrostatic Test to Destruction

(a) The maximum allowable working pressure of identical cast nodular iron vessels, based on testing one of them to destruction in accordance with Par. UG-101 (m), shall be

$$P_R = \left(\frac{P_B f}{5}\right)\left(\frac{\text{Specified min. tensile strength}}{\text{Min. tensile str. of associated arbitration bar}}\right)$$

where P_R = maximum allowable working pressure in pounds per square inch;
P_B = destruction test pressure in pounds per square inch; and
f = casting quality factor as defined in Par. UG-24.

The principle of Par. UG-101 (c) shall be followed.

(b) All pressure vessels or pressure vessel parts of the same material, design, and construction, whose maximum allowable working pressure is based on the destruction test of a sample vessel or part, shall be subjected to a hydrostatic test pressure of not less than twice the maximum allowable working pressure determined by the application of the rules in (a).

STAMPING AND REPORT

UCN-115 General

The provisions for stamping and preparing reports in Pars. UG-115 through UG-120 shall apply without supplement to vessels constructed in cast nodular iron.

PRESSURE-RELIEF DEVICES

UCN-125 General

The provisions for the application of pressure-relief devices in Pars. UG-125 through UG-134 shall apply without supplement to vessels constructed of cast nodular iron.

Part UHT

Requirements for Pressure Vessels Constructed of Ferritic Steels with Tensile Properties Enhanced by Heat Treatment

GENERAL

UHT-1 Scope

The rules in Part UHT are applicable to pressure vessels and vessel parts that are constructed of ferritic steels suitable for welding, whose tensile properties have been enhanced by heat treatment, and shall be used in conjunction with the general requirements in Subsection A, and with the specific requirements in Part UW of Subsection B. The heat treatment may be applied to the individual parts of a vessel prior to assembly by welding, to partially fabricated components, or to an entire vessel after completion of welding. This part is not intended to apply to those steels approved for use under the rules of Part UCS but which are furnished in such thicknesses that heat treatment involving the use of accelerated cooling, including liquid quenching, is used to attain structures comparable to those attained by normalizing thinner sections. Integrally forged vessels, quenched and tempered, which do not contain welded seams, are not intended to be covered by the rules of this Part.

MATERIALS

UHT-5 General

(a) Steels covered by this Part subject to stress due to pressure shall conform to one of the specifications given in Section II and shall be limited to those listed in Table UHT-23.

The thickness limitations of the material specifications shall not be exceeded.

(b) Steels listed in Table UHT-23 may be used for the entire vessel or for individual components which are joined to other grades listed in that Table or to other steels conforming to specifications listed in Parts UCS or UHA of this Division when specifically permitted in this Part.

(c) All steels listed in Table UHT-23 shall be tested for notch ductility, as required by Par. UHT-6. These ductility tests shall be conducted at the lowest temperature at which pressure will be applied to the vessel, or the design temperature, whichever is lower. For materials to be used in vessels containing fluids at temperatures governed by atmospheric conditions only and whose vapor pressure reduces with decreasing temperature, the impact tests may be made at the temperature corresponding with the vapor pressure obtained by dividing the vessel design pressure by 2½. In no case shall the test temperature be higher than 32 F.

(d) All test specimens shall be prepared from the material in its final heat treated condition or from full-thickness samples of the same heat similarly and simultaneously treated. Test samples shall be of such size that the prepared test specimens are free from any change in properties due to edge effects.

(e) Where the vessel or vessel parts is to be hot formed or postweld heat treated (stress relieved), this identical heat treatment shall be applied to the test specimens required by the material specifications including the cooling rate specified by the fabricator which shall in no case be slower than that specified in Table UHT-56.

UHT-6 Test Requirements

(a) (1) A Charpy V-notch test (three specimens) shall be made for each plate as it is heat treated, and from each heat of bars, pipe, tubing, rolled sections, forged parts or castings included in any one heat treatment lot.

(2) The location and orientation of the specimens shall be the same as required for Charpy Keyhole impact tests by Par. UG-84, and, as applicably by Section II, Material Specifications, covering materials of the applicable product form for low temperature service except that the specimen shall be oriented as follows for the given product form:

Plates – transverse to final direction of rolling.

Circular Forgings – parallel to the circumference.
Pipe and Tube – longitudinal.

(3) Where the geometry permits, the Charpy tests shall be made on full-size specimens (10 × 10 mm) in accordance with Figure 11 (Type A) of ASTM Designation A370-64, Mechanical Testing of Steel Products. Where the geometry does not permit full size specimens to be taken, reduced size specimens shall be used in which the dimension along the notch shall be largest possible of the following widths:

Fractional Width of full-size specimens	Width in mm	Width in inches
¾	7.50	0.296
⅔	6.67	0.263
½	5.00	0.197
⅓	3.33	0.131

(4) Each of the three specimens tested shall have a lateral expansion opposite the notch not less than 0.015 inches (15 mils).

The values of absorbed energy in ft-lb and of fracture appearance in percentage shear shall be recorded for information and these values shall be retained for a period of at least two years.

(5) If the value of lateral expansion for one specimen is below 0.015 inches, but not below 0.010 inches, a retest of three additional specimens may be made, each of which must equal or exceed the specified minimum value of 0.015 inches. Such a retest shall be permitted only when the average value of the three specimens equals or exceeds 0.015 inches. If the required values are not obtained in the retest or if the values in the initial test are below the minimum required for retest, the material may be reheat treated. After reheat treatment, a set of three specimens shall be made, each of which must equal or exceed the specified minimum value of 0.015 inches.

(b) (1) Materials conforming to Specification SA-517 and which are to be designed for minimum allowable temperature below –20 F shall have, in addition to the Charpy tests required under UHT-6 (a), drop weight tests as defined by ASTM E208-63T, "Tentative Method for Conducting Drop-Weight Tests to Determine Nil Ductility Transition Temperatures of Ferritic Steels," made as follows:

(2) For plates ⅝ in. thick and over, one drop-weight test (two specimens) shall be made for each plate as heat treated.

(3) For forgings and castings of all thicknesses one drop-weight test (two specimens) shall be made for each heat in any one heat treatment lot using the procedure in SA-350 for forgings and in SA-352 for castings.

(4) Each of the two test specimens shall meet the "no-break" criterion, as defined by ASTM E208-63T, at test temperature.

DESIGN

UHT-16 General

(a) The rules in the following paragraphs apply specifically to the design of pressure vessels and vessel parts that are constructed of heat treated steels covered by this Part and shall be used in conjunction with the general requirements for Design in Subsection A and in Subsection B, Part UW.

(b) *Thickness* The minimum thickness after forming of any section subject to pressure shall be ¼ in., except as permitted by the footnotes in Table UHT-23.

UHT-17 Welded Joints

(a) In vessels or vessel parts constructed of heat treated steels covered by this part except as permitted in (b), all joints of categories A, B, and C, as defined in Par. UW-3, and all other welded joints between parts of the pressure containing enclosure which are not defined by the category designation, shall be in accordance with Type No. (1) of Table UW-12. All joints of Category D shall be in accordance with Type No. (1) of Table UW-12 when the shell plate thickness is 2 inches or less (see Fig. UHT-18.1). When the thickness exceeds 2 inches the weld detail may be as permitted for nozzles in Par. UHT-18, Fig. UHT-18.2.

(b) For materials SA-333 Grade 8, SA-334 Grade 8, SA-353, SA-522 and SA-553 the joints of various Categories (see Par. UW-3) shall be as follows:

(1) All joints of Category A shall be Type No. (1) of Table UW-12.

(2) All joints of Category B shall be Type No. (1) or No. (2) of Table UW-12.

(3) All joints of Category C shall be full penetration welds extending thru the entire section at the joint.

(4) All joints of Category D shall be full penetration welds extending thru the entire thickness of the vessel wall or nozzle wall.

UHT-18 Nozzles and Other Connections

(a) All openings regardless of size shall meet the requirements for reinforcing, nozzle geometry and nozzle attachments and shall conform to details shown in Figure UHT-18.1 or as shown in 18.2 when permitted by the provisions of Par. UHT-17 or as shown in Figure UW-16.1 when permitted by the provisions of UHT-17 (b).

(b) All pressure parts shall be made of material whose specified minimum strength is equal to or greater than that of the shell material, except that pipe flanges, pipe or communicating chambers may be of carbon, low or high alloy steel welded

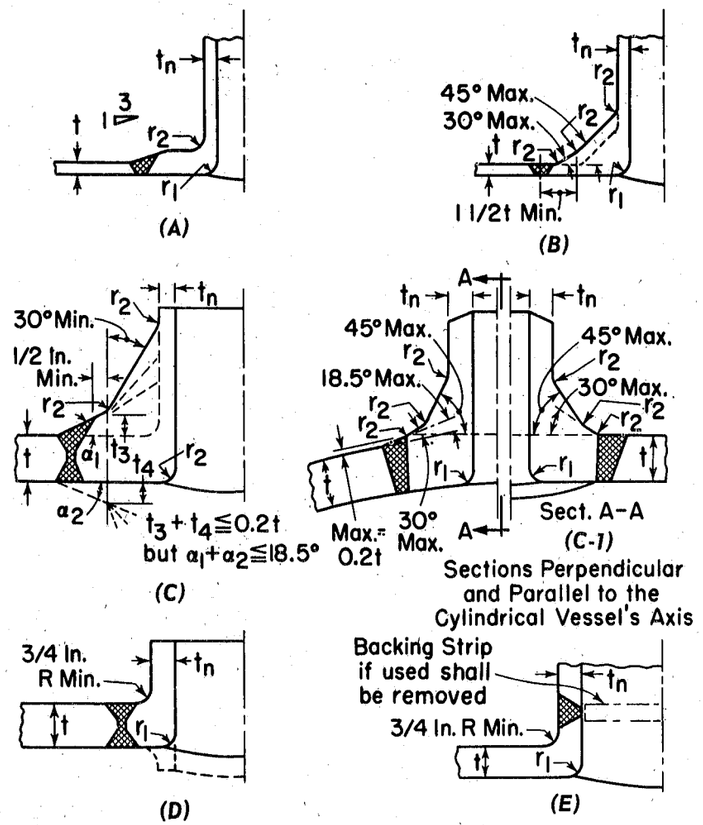

Note:
- t = Thickness of Part Penetrated
- t_n = Thickness of Penetrating Part
- t_c Min. = 0.7 t_n or 1/4 In. whichever is less
- r_1 Min. = 1/4 t or 3/4 In. whichever is less
- r_2 = 1/4 In. minimum

FIG. UHT-18.1 ACCEPTABLE WELDED NOZZLE ATTACHMENT READILY RADIOGRAPHED TO CODE STANDARDS

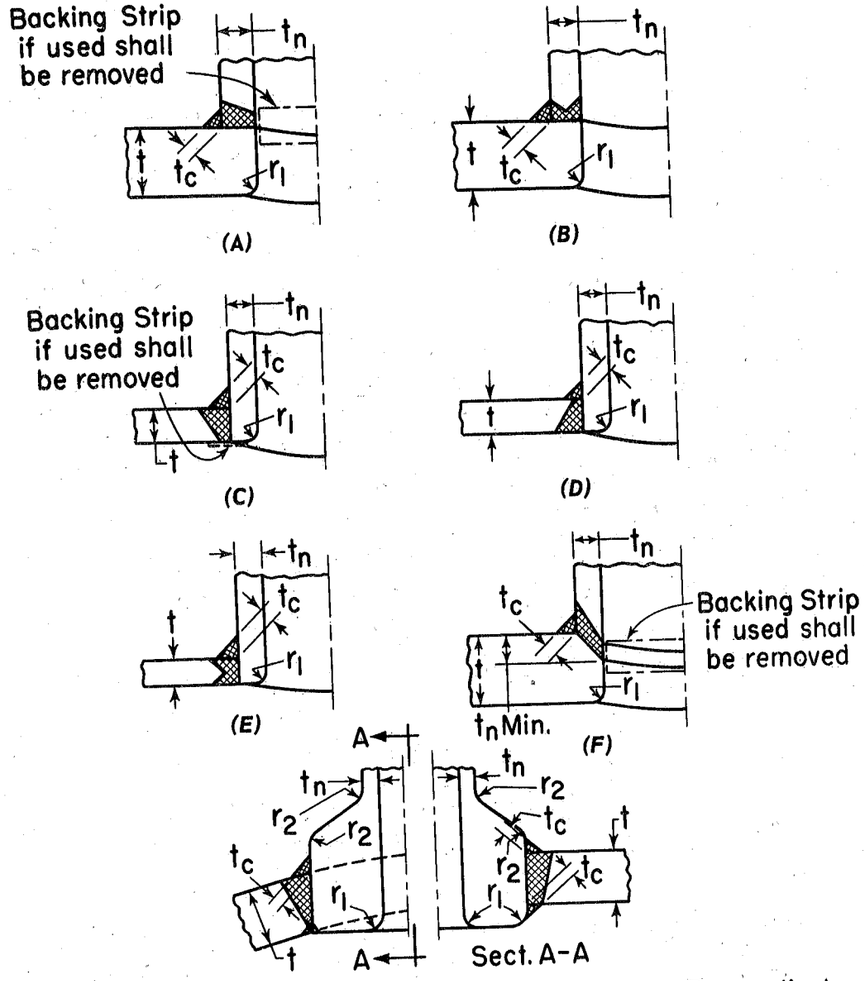

Note:
- t = Thickness of Part Penetrated
- t_n = Thickness of Penetrating Part
- t_c Min. = 0.7 t_n or 1/4 In. whichever is less
- r_1 Min. = 1/4 t or 3/4 In. whichever is less
- r_2 = 1/4 In. minimum

FIG. UHT-18.2 ACCEPTABLE FULL PENETRATION WELDED NOZZLE ATTACHMENTS RADIOGRAPHABLE WITH DIFFICULTY AND GENERALLY REQUIRING SPECIAL TECHNIQUES INCLUDING MULTIPLE EXPOSURES TO TAKE CARE OF THICKNESS VARIATIONS

to nozzle necks of the required material provided:

(1) The joint is a circumferential butt weld located not less than $\sqrt{rt}$ measured from the limit of reinforcement as defined in Par. UG-40, where r = the inside radius of the nozzle neck, and t = the thickness of the nozzle at the joint.

(2) The design of the nozzle neck at the joint is made on the basis of the allowable stress value of the weaker material.

(3) The slope of the nozzle neck does not exceed 3 to 1 for at least a distance of 1.5 t from the center of the joint.

(4) The diameter of the nozzle neck does not exceed the limits given in Par. UA-7 for openings designed to Par. UG-36 through UG-44.

UHT-19 Conical Sections

Conical sections shall be provided with a skirt having a length not less than 0.50 $\sqrt{rt}$ (where r is the inside radius of the adjacent cylinder and t is the thickness of the cone), or 1½ in., whichever is larger. A knuckle shall be provided at both ends of the conical section; the knuckle radius shall not be less than 10 per cent of the outside diameter of the skirt, but in no case less than three times the cone thickness.

UHT-20 Joint Alignment

The requirements of Par. UW-33 shall be met except that the following maximum permissible offset values shall be used in place of those given in Par. UW-33(a):

Section Thickness In Inches	Joint Direction	
	Longitudinal	Circumferential
Up to ½, incl.	.2t	.2t
Over ½ to $^{15}/_{16}$, incl.	$^{3}/_{32}$ in.	.2t
Over $^{15}/_{16}$ to 1½ incl.	$^{3}/_{32}$ in.	$^{3}/_{16}$ in.
Over 1½	$^{3}/_{32}$ in.	lesser of $^{1}/_{8}t$ or ¼ in.

UHT-23 Maximum Allowable Stress Values

Table UHT-23 gives the maximum allowable stress values at the temperatures indicated for materials conforming to the specifications listed therein. Values may be interpolated for intermediate temperatures (see Par. UG-23).

UHT-25 Corrosion Allowance

Provision for possible deterioration due to the environment in which the vessel operates is the responsibility of the designer.

UHT-27 Thickness of Shells under External Pressure

Cylindrical and spherical shells under external pressure shall be designed by the rules in Par. UG-28, using Fig. UHT-28.1 in Appendix V for SA-517 A, B, D, E and F.

UHT-28 Structural Attachments and Stiffening Rings

All structural attachments and stiffening rings which are welded directly to pressure parts shall

TABLE UHT-23
MAXIMUM ALLOWABLE STRESS VALUES IN TENSION FOR FERRITIC STEELS WITH PROPERTIES ENHANCED BY HEAT TREATMENT

Spec	Grade	Specified UTS psi min	Specified YS psi min	Notes	For Metal Temperatures Not Exceeding Deg F: 150 & below	200	250	300	400	500	600	650	700	750
Plates														
SA-353		100,000	75,000	(1),(2)	25,000	23,400	22,700	...	...	...	...	...	...	...
SA-353		100,000	75,000	(1),(3)	23,750	22,250	21,550	...	...	...	...	...	...	...
SA-517	A	115,000	100,000		28,750	27,750		26,750	26,000	26,000	26,000	25,000	...	...
SA-517	B	115,000	100,000		28,750	27,750		26,750	26,000	26,000	26,000	25,000	...	...
SA-517	D	115,000	100,000		28,750	27,750		26,750	26,000	26,000	26,000	25,000	...	...
SA-517	E	115,000	100,000		28,750	27,750		26,750	26,000	26,000	26,000	25,000	...	...
SA-517	F	115,000	100,000		28,750	27,750		26,750	26,000	26,000	26,000	25,000	...	...
SA-553		100,000	85,000	(1),(2)	25,000	23,400	22,700	...	...	...	...	...	...	...
SA-553		100,000	85,000	(1),(3)	23,750	22,250	21,500	...	...	...	...	...	...	...
Pipes and Tubes														
SA-333	8	100,000	75,000	(1),(2)	25,000	23,400	22,700	...	...	...	...	...	...	...
SA-333	8	100,000	75,000	(1),(3)	23,750	22,250	21,550	...	...	...	...	...	...	...
SA-334	8	100,000	75,000	(1),(2)	25,000	23,400	22,700	...	...	...	...	...	...	...
SA-334	8	100,000	75,000	(1),(3)	23,750	22,250	21,550	...	...	...	...	...	...	...
Forgings														
SA-522		100,000	75,000	(2)	25,000	23,400	22,700	...	...	...	...	...	...	...
SA-522		100,000	75,000	(3)	23,750	22,250	21,550	...	...	...	...	...	...	...

Notes: (1) Minimum thickness after forming any section subject to pressure shall be $^{3}/_{16}$ in.
(2) Non-welded.
(3) Welded.

be made of material whose specified minimum strength is equal to or greater than that of the material to which it is attached.

UHT-29 Stiffening Rings for Shells under External Pressure

Rules covering the design of stiffening rings are given in Par. UG-29. The design shall be based on the appropriate chart in this Division for the material used in the ring.

UHT-30 Attachment of Stiffening Rings to Shells

Rules covering the attachment of stiffening rings are given in Par. UG-30. Attachments shall be made using a welding procedure qualified to Section IX of the Code for vessels constructed to Part UHT.

UHT-32 Formed Heads, Pressure on Concave Side

Formed heads shall be limited to ellipsoidal and/or hemispherical heads designed in accordance with Par. UG-32(d) or (f).

UHT-33 Formed Heads, Pressure on Convex Side

Ellipsoidal, hemispherical and conical heads having pressure on the convex side (minus heads) shall be designed by the Rules of Par. UG-33, using Fig. UHT-28.1 in Appendix V for SA-517 A, B, D, E and F.

UHT-34 Hemispherical Heads

When hemispherical heads are used, the head-to-shell transition of Fig. UW-9(c) shall be used. When the weld is in or adjacent to the tapered section, it shall be finished in a manner that will maintain the required uniform slope for the full length of the tapered section.

UHT-40 Materials Having Different Coefficients of Expansion

When welding materials with austenitic electrodes the differences between the coefficients of expansion and the strengths of the base material and the weld metal should be carefully considered, particularly for applications involving cyclic stresses.

UHT-56 Postweld Heat Treatment

(a) Before applying the detailed requirements and exemptions in these paragraphs satisfactory weld procedure qualifications of the procedures to be used shall be performed in accordance with all of the essential variables in Section IX of the

TABLE UHT-56
POSTWELD HEAT TREATMENT REQUIREMENTS

Material	P. Number	Quench (Q) or Normalize (N)	Temper	Thickness Requiring PWHT	Temp.	Holding Time Hrs/in.	Holding Time Min. Hrs.	Cool Rate
SA-333 Gr8 or SA-334 Gr8	11A SG-1	1625-1700(N) Plus 1425-1500(N)	1050-1125	Over 2"	1025-1085	1 ;	2	Note 1, Note 2
SA-333 Gr8 or SA-334 Gr8	11A SG-1	1450-1525(Q)	1050-1125	Over 2"	1025-1085	1 ;	2	Note 1, Note 2
SA-353	11A SG-1	(1625-1700(N) 1425-1500(N)	1050-1125	Over 2"	1025-1085	1 ;	2	Note 1, Note 2
SA-517 GrA	11B SG-1	1650-1725(Q)	1150 min.	Over .58"	1000-1100	1 ;	1/4	Note 1
SA-517 GrE	11B SG-2	1650-1725(Q)	1150 min.	Over .58"	1000-1100	1 ;	1/4	Note 1
SA-517 GrF	11B SG-3	1650-1725(Q)	1150 min.	Over .58"	1000-1100	1 ;	1/4	Note 1
SA-517 GrB	11B SG-4	1650-1725(Q)	1150 min.	Over .58"	1000-1100	1 ;	1/4	Note 1
SA-517 GrD	11B SG-5	1650-1725(Q)	1150 min.	Over .58"	1000-1100	1 ;	1/4	Note 1
SA-522	11A SG-1	(1625-1700(N) 1425-1500(N)	1050-1125	Over 2"	1025-1085	1 ;	2	Note 1, Note 2
SA-522	11A SG-1	1450-1525(Q)	1050-1125	Over 2"	1025-1085	1 ;	2	Note 1, Note 2
SA-553	11A SG-1	1450-1525(Q)	1050-1125	Over 2"	1025-1085	1 ;	2	Note 1, Note 2

NOTE:
(1) The maximum cooling rate required by Par. UCS-56(e)(5) need not apply.
(2) If postweld heat treatment is used, the cooling rate shall not be less than 300 F per hour down to a temperature of 600 F.

Code including conditions of postweld heat treatment or lack of postweld heat treatment and including restrictions listed below.

(b) Vessels or vessel parts constructed of steels listed in Table UHT-23 shall be postweld heat treated when required in Table UHT-56.

(c) Postweld heat treatment shall be performed in accordance with Par. UCS-56 as modified by the requirements of TableUHT-56.

(d) All welding of connections and attachments shall be postweld heat treated whenever required by Table UHT-56 based on the greatest thickness of material at the point of attachment of the head or shell (see Par. UHT-56(b) and (c)).

(e) When materials of Specifications SA-333 Grade 8, SA-334 Grade 8, SA-353, SA-522 and SA-553 are postweld heat treated the complete vessel or vessel component being so heat treated shall be maintained within the permissible temperature range defined in Table UHT-56.

UHT-57 Examination

(a) *Radiography* Complete radiographic examination in accordance with the requirements of Par. UW-51 is required for all welded joints of Type No. (1) of Table UW-12, made in or to quenched and tempered steel.

(b) *Nozzle Attachment Welds* Nozzle attachment welds as provided for in Par. UHT-18, Figs. UHT-18.1 and 18.2, shall be radiographically examined in accordance with the requirements of Par. UW-51, except that Fig. UHT-18.2 type nozzles having an inside diameter of 2 inches or less shall be examined by a magnetic particle or liquid penetrant method. For nozzle attachments illustrated as (a), (b) and (f) of Fig. UHT-18.2 the exposed cross section of the vessel wall at the opening shall be included in the examination.

(c) *Magnetic Particle Method* All welds, including welds for attaching nonpressure parts to heat treated steels covered by this Part, shall be examined by the magnetic particle method after the hydrostatic test, except those surfaces not accessible after the hydrostatic test shall be examined by the magnetic particle method at the last feasible stage of vessel fabrication. A magnetization method shall be used that will avoid arc strikes. Cracks and crack-like defects shall be repaired or removed.

(b) *Liquid Penetrant Method* As an acceptable alternative to magnetic particle examination or when magnetic particle methods are not feasable because of the nonmagnetic character of the weld deposits, a liquid penetrant method shall be used. Cracks and crack-like defects are unacceptable and shall be repaired or removed.

FABRICATION

UHT-75 General

The rules in the following paragraphs apply specifically to the fabrication of pressure vessels and vessel parts that are constructed of heat treated steels covered by this Part and shall be used in conjunction with the general requirements for fabrication in Subsection A, and, when applicable, with the specific requirements for Fabrication in Subsection B, Part UW.

UHT-79 Forming Shell Sections and Heads

(a) The selected thickness of material shall be such that the forming processes will not reduce the thickness of the material at any point below the minimum value required by the rules.

(1) Pieces that are formed after heat treatment at a temperature lower than the final tempering shall be post heat treated in accordance with Table UHT-56 when the extreme fiber strain from forming exceeds 3 percent as determined by the following formula:

$$\text{Per cent strain} = \frac{65t}{R_f}\left(1 - \frac{R_f}{R_o}\right)$$

t = Plate thickness
R_f = Final radius
R_o = Original radius (equals infinity for flat plate)

(2) Pieces that are formed at temperatures equal to or higher than the original tempering shall be reheat treated in accordance with Table UHT-56 either before or after welding into the vessel.

UHT-80 Heat Treatment

(a) *Heating Furnace* Furnaces for heating, for quenching, for normalizing, and for tempering shall be provided with suitable equipment for the automatic recording of temperatures. The temperature of the vessel or vessel part during the holding period shall be recorded and shall be controlled within plus or minus 25 F.

(b) Liquid quenching of flat plates and individual parts shall be done as required by the applicable material specifications.

(c) Formed plates for shell sections and heads may be quenched by sprays or immersion.

(d) Entire vessels, after completion of all welding operations, may be quenched by sprays or immersion.

(e) The design and operation of spray equipment and the size of tanks and provision for forced circulation shall be such as to produce a severity of quench in the quenched item sufficient to meet, in representative test specimens after tempering, the requirements of the materials specifications.

UHT-81 Heat Treatment Verification Tests

(a) Tests shall be made to verify that the heat treatments, and subsequent thermal treatments, performed by the fabricator have produced the required properties.

(b) One or more test coupons representative of the material and the welding in each vessel or vessel component shall be heat treated with the vessel or vessel component.

The requirements of (c) and (d), below, are to be taken as minimum steps toward these objectives.

(c) (1) One or more test coupons from each lot of material in each vessel (see UHT-81(d)) shall be quenched with the vessel or vessel component. A lot is defined as material from the same melt, quenched or normalized simultaneously and whose thicknesses are within plus or minus 20 percent or ½ in. of nominal thickness, whichever is smaller. The test coupons shall be so proportionated that tensile and impact tests may be taken from the same locations relative to thickness as are required by the applicable material specifications. Weld metal tests shall be taken from the same locations relative to thickness as are required by the materials specifications for plates used in the component to be treated. The gage length of tensile specimens and the middle third of the length of impact specimens must be located at a minimum distance of $1 \times t$ from the quenched edge and/or end of the test coupon, where t is the thickness of the material which the test coupon represents. If desired, the effect of this distance may be achieved by temporary attachment of suitable thermal buffers. The effectiveness of such buffers shall be demonstrated by tests.

(2) In cases where the test coupon is not attached to the part being treated, it shall be quenched from the same heat treatment charge and under the conditions as the part which it represents. It shall be so proportioned that test specimens may be taken from the locations prescribed in (1).

(d) **Tempering**

(1) *Attached Test Coupons* The test coupons shall remain attached to the vessel or vessel component during tempering, except that any thermal buffers may be removed after quenching. After the tempering operation and after removal from the component, the coupon shall be subjected to the same thermal treatment(s), if any, to which the vessel or vessel component will be later subjected. The holding time at temperature shall not be less than that applied to the vessel or vessel component (except that the total time at each temperature may be applied in one heating cycle) and the cooling rate shall be no faster.

(2) *Separate Test Coupons* Test coupons which are quenched separately as described in (c)(2) shall be tempered similarly and simultaneously with the vessel or component which they represent. The conditions for subjecting the test coupons to subsequent thermal treatment(s) shall be as described in (c)(1).

(e) **Number of Tests**

One tensile test and one impact test shall be made on material from coupons representing each lot of material in each vessel or vessel component heat treated. A lot is defined as material from the same melt quenched simultaneously and whose thicknesses are within plus or minus 20 per cent, or ½ inch, of nominal thickness, whichever is smaller.

(1) Coupons not containing welds shall meet the complete tensile requirements of the material specification and impact requirements of this part.

(2) Coupons containing weld metal shall be tested across the weld and shall meet the ultimate tensile strength requirements of the material specifications; in addition, the minimum impact requirements shall be met by samples with notches in the weld metal. The form and dimension of the tensile test specimen shall conform to Fig. Q-6 (c) of Section IX. Yield strength and elongation are not a requirement of this test. Charpy impact testing shall be in accordance with the requirements of Par. UHT-6.

UHT-82 Welding

(a) The qualification of the welding procedure and the welders shall conform to the requirements of Section IX.

(b) Filler metal containing more than 0.08 vanadium shall not be used for weldments subject to post heat treatment.

(c) For welded vessels, the welds of which are not subject to quenching or normalizing followed by tempering, the deposited weld metal and the heat-affected zone shall meet the impact test requirements of UG-84 except that the Charpy V-notch tests and requirements of UHT-6(a) shall apply

UHT-83 Methods of Metal Removal

(a) Plate edges, welding bevels, chamferring and other operations involving the removal of metal shall be by machining, chipping or grinding except as provided in (b).

(b) When metal removal is accomplished by methods involving melting, such as gas cutting or arc-air gouging, etc. it shall be done with due precautions to avoid cracking. Where the cut surfaces are not to be subsequently eliminated by fusion with weld deposits, they shall be removed by machining or grinding to a depth of at least

1/16 in. followed by inspection by magnetic particle or liquid penetrant methods.

Cautionary Note: The properties of the base metal may be adversely affected by excessive local heat inputs.

UHT-84 Weld Finish

The requirements of Pars. UW-35(a) and UW-51(b) shall be met except that the maximum weld reinforcement shall not exceed 10 per cent of the plate thickness, or 1/8 in. whichever is less. The edge of the weld deposits shall merge smoothly into the base metal without undercuts or abrupt transitions; this requirement shall apply to fillet and groove welds as well as to butt welds.

UHT-85 Structural and Temporary Welds

(a) Welds for pads, lifting lugs and other nonpressure parts, as well as temporary lugs for alignment, shall be made by qualified welders in full compliance with a qualified welding procedure.

(b) Temporary welds shall be removed and the metal surface shall be restored to a smooth contour. The area shall be inspected by magnetic powders or penetrant oil for the detection and elimination of cracks or crack-like defects. If repair welding is required, it shall be in accordance with qualified procedures, and the finished weld surface shall be inspected as required in Pars. UHT-57(b) or (c). Temporary welds and repair welds shall be considered the same as all other welds so far as requirements for qualified operators and procedures, and for heat treatment are concerned.

UHT-86 Marking on Plates and Other Materials

Steel stamping of all types may be omitted on material below 1/2 in. in thickness. Other markings used in lieu of stamping to identify material shall be legible on the completed vessel until final acceptance by the authorized inspector. Any steel stamping shall be done with "low stress" stamps, as commercially available.

INSPECTION AND TESTS

UHT-90 General

The provisions for inspection and testing in Subsections A and B shall apply to vessels and vessel parts constructed of steels covered by this Part.

STAMPING AND REPORTS

UHT-115 General

The provisions for stamping and reports in UG-115 through UG-120 shall apply to pressure vessel constructed in whole or in part of steels covered by this Part, except that the use of name plates is mandatory for shell thicknesses below 1/2 in. Name plates are preferred on vessels constructed of steels covered by this Part in all thicknesses in preference to stamping. In addition to the required marking the letters UHT shall be applied below the "U" symbol.

PRESSURE RELIEF DEVICES

UHT-125 General

The provisions for pressure-relief devices in Pars. UG-125 through UG-134 shall apply without supplement to pressure vessels constructed in whole or in part of steels covered by this Part.

Mandatory Appendices

APPENDIX I
Supplementary Design Formulas

UA-1 Thickness of Cylindrical and Spherical Shells

The following formulas, in terms of the outside radius, are equivalent to and may be used instead of those given in Par. UG-27(c) and (d):

(1) For Cylindrical Shells

$$t = \frac{PR_o}{SE + 0.4P} \quad \text{or} \quad P = \frac{SEt}{R_o - 0.4t}$$

where R_o = outside radius of the shell course under consideration, inches.

(2) For Spherical Shells

$$t = \frac{PR_o}{2SE + 0.8P}$$

$$P = \frac{2SEt}{R_o - 0.8t}$$

Other symbols are as defined in Par. UG-27.

UA-2 Thick Cylindrical Shells

(1) *Circumferential Stress (Longitudinal Joints)* When the thickness of the cylindrical shell under internal pressure exceeds one-half of the inside radius, or when P exceeds $0.385\,SE$, the following formulas shall apply:

When P is known and t is desired:

$$t = R\,(Z^{\frac{1}{2}} - 1) = R_o\,\frac{(Z^{\frac{1}{2}} - 1)}{Z^{\frac{1}{2}}}$$

where $Z = \dfrac{SE + P}{SE - P}$

Where t is known and P is desired:

$$P = SE\left(\frac{Z - 1}{Z + 1}\right)$$

where $Z = \left(\dfrac{R + t}{R}\right)^2 = \left(\dfrac{R_o}{R}\right)^2 = \left(\dfrac{R_o}{R_o - t}\right)^2$

(2) *Longitudinal stress (circumferential joints)* When the thickness of the cylindrical shell under internal pressure exceeds one-half of the inside radius, or when P exceeds $1.25\,SE$, the following formulas shall apply:

When P is known and t is desired.

$$t = R\,(Z^{\frac{1}{2}} - 1) = R_o\left(\frac{Z^{\frac{1}{2}} - 1}{Z^{\frac{1}{2}}}\right)$$

Where $Z = \left(\dfrac{P}{SE} + 1\right)$

When t is known and P is desired:

$$P = SE\,(Z - 1)$$

Where $Z = \left(\dfrac{R + t}{R}\right)^2 = \left(\dfrac{R_o}{R}\right)^2 = \left(\dfrac{R_o}{R_o - 1}\right)^2$

Symbols are as defined in Pars. UG-27 and UA-1.

UA-3 Thick Spherical Shells

When the thickness of the shell of a wholly spherical vessel or of a hemispherical head under internal pressure exceeds $0.356R$, or when P exceeds $0.665SE$, the following formulas shall apply:

When P is known and t is desired:

$$t = R\,(Y^{1/3} - 1) = R_0\left(\frac{Y^{1/3} - 1}{Y^{1/3}}\right)$$

where $Y = \dfrac{2\,(SE + P)}{2SE - P}$

When t is known and P is desired:

$$P = 2SE\left(\frac{Y - 1}{Y + 2}\right)$$

where $Y = \left(\dfrac{R + t}{R}\right)^3 = \left(\dfrac{R_0}{R_0 - t}\right)^3$

Symbols are as defined in Pars. UG-27 and UA-1.

UA-4 Formulas for the Design of Formed Heads Under Internal Pressure

(a) The formulas of this paragraph provide for the design of formed heads of proportions other than those given in Par. UG-32, in terms of inside and outside diameter.

(b) The notations defined below are used in the formulas of this paragraph (see Fig. UA-4):

t = minimum required thickness of head after forming, inches (exclusive of corrosion allowance, see Par. UG-25),

P = design pressure, pounds per square inch (see Par. UG-21) (or maximum allowable working pressure for existing vessels, see Par. UG-98),

D = inside diameter of the head skirt; or inside length of the major axis of an ellipsoidal head; or inside diameter of a cone head at the point under consideration measured perpendicular to the longitudinal axis; inches (measurements to be taken before corrosion allowance is added),

D_0 = outside diameter of the head skirt; or outside length of the major axis of an ellipsoidal head; or outside diameter of a cone head at the point under consideration measured perpendicular to the longitudinal axis, inches,

S = maximum allowable working stress, as given in Subsection C, pounds per square inch,

E = lowest efficiency of any joint in the head (for hemispherical heads this includes head-to-shell joint):

For welded vessels, use the efficiency specified in Par. UW-12;

For riveted joints, use the efficiency specified in Par. UR-15;

For seamless heads, use $E = 1$ except for hemispherical heads furnished without a skirt, in which case the head to shell joint must be considered.

r = inside knuckle radius, inches,

L = inside spherical or crown radius for torispherical and hemispherical heads, inches,

$L = K_1D$ for ellipsoidal heads in which K_1 is obtained from Table UG-37, inches,

L_0 = outside spherical or crown radius, inches,

$\dfrac{L}{r}$ = ratio of the inside crown radius to the inside knuckle radius, used in Table UA-4.2,

M = a factor in the formulas for torispherical heads depending on the head proportion, L/r,

h = one-half of the length of the minor axis of the ellipsoidal head, or the inside depth of the ellipsoidal head measured from the tangent line (head bend line), inches,

K = a factor in the formulas for ellipsoidal heads depending on the head proportion, $D/2h$,

$\dfrac{D}{2h}$ = ratio of the major to the minor axis of ellipsoidal heads, which equals the inside diameter of the skirt of the head divided by twice the inside height of the head, and is used in Table UA-4.1,

α = one-half of the included (apex) angle of the cone at the centerline of the head.

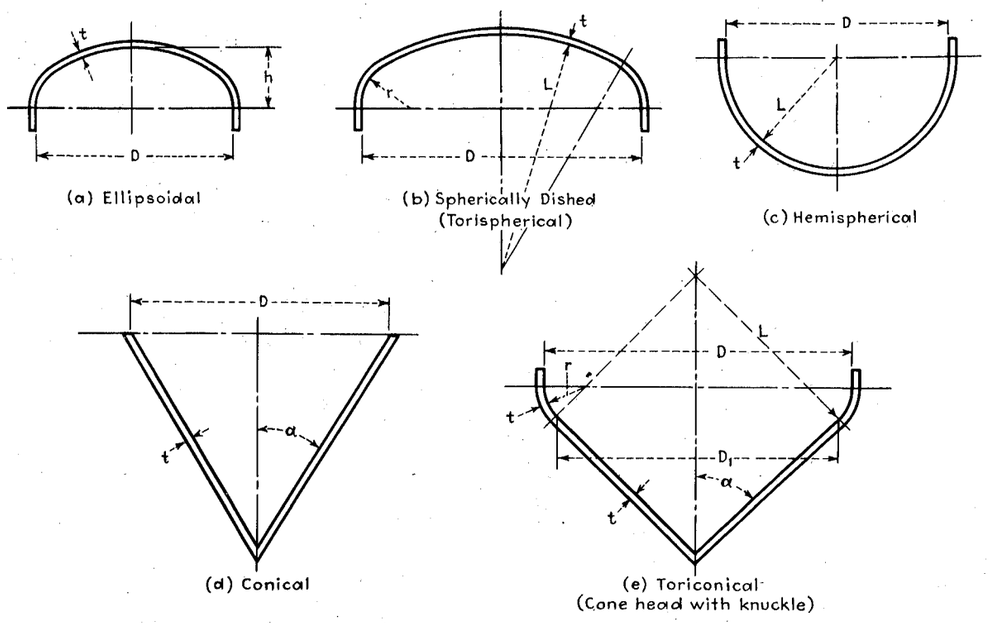

FIG. UA-4 PRINCIPAL DIMENSIONS OF TYPICAL HEADS

(c) *Ellipsoidal Heads*

$$t = \frac{PDK}{2SE - 0.2P} \quad \text{or} \quad P = \frac{2SEt}{KD + 0.2t} \quad \ldots (1)$$

$$t = \frac{PD_0K}{2SE + 2P\,(K - 0.1)} \quad \text{or}$$

$$P = \frac{2SEt}{KD_0 - 2t\,(K - 0.1)} \quad \ldots (2)$$

where $K = \dfrac{1}{6}\left[2 + \left(\dfrac{D}{2h}\right)^2\right]$

Numerical values of the factor K are given in Table UA-4.1.

Example 1: Determine the required thickness t of a seamless ellipsoidal head, exclusive of provision for corrosion, for the following conditions:

$D = 40$ in; $h = 9$ in; $P = 200$ psi; $S = 13{,}750$ psi; $E = 1.00$

$$\frac{D}{2h} = \frac{40}{18} = 2.22$$

From Table UA-4.1, $K = 1.14$
Substituting in Equation (1)

$$t = \frac{200 \times 40 \times 1.14}{2 \times 13750 \times 1.00 - 0.2 \times 200} = 0.33 \text{ in.}$$

Example 2: Determine the maximum allowable working pressure P of a seamless ellipsoidal head for the following conditions:

$D = 30$ in.; $h = 7.5$ in.; total thickness = ½ in. with no allowance for corrosion; material conforms to Specification SA-285 Grade C; maximum operating temperature = 800 F; $E = 1.00$.

From Table UCS-23, $S = 10{,}200$ psi

$$\frac{D}{2h} = \frac{30}{15} =$$

From Table UA-4.1, $K = 1.0$
Substituting in Equation (1)

$$P = \frac{2 \times 10{,}200 \times 1.0 \times 0.5}{1 \times 30 + 0.2 \times 0.5} = 339 \text{ psi}$$

(d) *Torispherical Heads*

$$t = \frac{PLM}{2SE - 0.2P} \quad \text{or} \quad P = \frac{2SEt}{LM + 0.2t} \quad \ldots (3)$$

$$t = \frac{PL_0M}{2SE + P\,(M - 0.2)} \quad \text{or}$$

$$P = \frac{2SEt}{ML_0 - t\,(M - 0.2)} \quad \ldots\ldots (4)$$

where $M = \dfrac{1}{4}\left(3 + \sqrt{\dfrac{L}{r}}\right)$

Numerical values of the factor M are given in Table UA-4.2.

Example 1: Determine the required thickness t, exclusive of allowance for corrosion, of a torispherical head for the following conditions:

$D = 40$ in.; $L = 40$ in.; $r = 4$ in.; $P = 200$ psi; $S = 13750$ psi; $E = 1.00$ (seamless head)

$\dfrac{L}{r} = \dfrac{40}{4} = 10$ and from Table UA-4.2, $M = 1.54$

Substituting in Equation (3):

$$t = \frac{200 \times 40 \times 1.54}{2 \times 13750 \times 1.00 - 0.2 \times 200} = 0.45 \text{ in.}$$

Example 2: Determine the maximum allowable working pressure P of a torispherical head for the following conditions:

$D = 30$ in.; $L = 24$ in.; $r = 2.00$ in.; $E = 1.00$. (seamless head); total thickness = 0.5 in. with no allowance for corrosion; material conforms to Specification SA-212, Grade B; maximum operating temperature = 900 F.

TABLE UA-4.1
VALUES OF FACTOR K
(Use nearest value of $D/2h$; interpolation unnecessary)

$\frac{D}{2h}$	3.0	2.9	2.8	2.7	2.6	2.5	2.4	2.3	2.2	2.1	2.0
K	1.83	1.73	1.64	1.55	1.46	1.37	1.29	1.21	1.14	1.07	1.00

$\frac{D}{2h}$	1.9	1.8	1.7	1.6	1.5	1.4	1.3	1.2	1.1	1.0
K	0.93	0.87	0.81	0.76	0.71	0.66	0.61	0.57	0.53	0.50

TABLE UA-4.2
VALUES OF FACTOR M
(Use nearest value of L/r; interpolation unnecessary)

$\frac{L}{r}$	1.0	1.25	1.50	1.75	2.00	2.25	2.50	2.75	3.00	3.25	3.50
M	1.00	1.03	1.06	1.08	1.10	1.13	1.15	1.17	1.18	1.20	1.22

$\frac{L}{r}$	4.0	4.5	5.0	5.5	6.0	6.5	7.0	7.5	8.0	8.5	9.0
M	1.25	1.28	1.31	1.34	1.36	1.39	1.41	1.44	1.46	1.48	1.50

$\frac{L}{r}$	9.5	10.00	10.5	11.0	11.5	12.0	13.0	14.0	15.0	16.0	16⅔*
M	1.52	1.54	1.56	1.58	1.60	1.62	1.65	1.69	1.72	1.75	1.77

*Maximum ratio allowed by Par. UG-32(j) when L equals the outside diameter of the skirt of the head.

From Table UCS-23, $S = 6500$ psi

$$\frac{L}{r} = \frac{24}{2.00} = 12.0$$

From Table UA-4.2, $M = 1.62$
Substituting in Equation (3):

$$P = \frac{2 \times 6500 \times 1.0 \times 0.5}{24 \times 1.62 + 0.2 \times 0.5} = 167 \text{ psi}$$

(e) *Conical Heads*

$$t = \frac{PD}{2 \cos \alpha (SE - 0.6P)} \text{ or}$$

$$P = \frac{2SEt \cos \alpha}{D + 1.2t \cos \alpha} \quad \ldots\ldots\ldots (5)$$

$$t = \frac{PD_0}{2 \cos \alpha (SE + 0.4P)} \text{ or}$$

$$P = \frac{2SEt \cos \alpha}{D_0 - 0.8t \cos \alpha} \quad \ldots\ldots\ldots (6)$$

UA-5 Rules for Reducer Sections and Conical Heads Under Internal Pressure

(a) The formulas of (b) and (c) provide for the design of reinforcement, if needed, at the cone-to-cylinder junctions for reducer sections and conical heads where all the elements have a common axis and the half-apex angle $\alpha \leqq 30°$. Subparagraph (e) provides for special analysis in the design of cone-to-cylinder intersections with or without reinforcing rings where α is greater than 30 deg.

The notations defined below are used in the formulas of the following subparagraphs:

t = minimum required thickness of cylinder at cone-to-cylinder junction, exclusive of corrosion allowance (see Par. UG-27(c)), inches,

t_s = nominal thickness of cylinder at cone-to-cylinder junction, exclusive of corrosion allowance (see Par. UG-25), inches,

t_c = nominal thickness of cone at cone-to-cylinder junction, exclusive of corrosion allowance (see Par. UG-25), inches,

t_e = the smaller of $(t_s - t)$ or $[t_c - (t/\cos \alpha)]$, inches,

R_s = inside radius of small cylinder, inches,

R_L = inside radius of large cylinder, inches,

A = required area of reinforcement, square inches,

A_e = effective area of reinforcement due to excess metal thickness, square inches,

Δ = Value to indicate need for reinforcement at cone-to-cylinder intersection having a half-apex angle $\alpha \leqq 30°$. When $\Delta \geqq \alpha$, no reinforcement at the junction is required (see Tables UA-5.1 and UA-5.2).

m = the smaller of $\left[\frac{t_s}{t} \cos (\alpha - \Delta)\right]$ or $\left[\frac{t_c \cos \alpha \cos (\alpha - \Delta)}{t}\right]$

E = lowest efficiency of the longitudinal joint in the shell or head or of the joint in the reinforcement ring. For the large end of the reducer in compression $E = 1$ for butt welds.

P, S and α are as defined in Par. UA-4(b).

(b) Reinforcement shall be provided at the junction of the cone with the large cylinder for conical heads and reducers without knuckles when the value of Δ obtained from Table UA-5.1, using the appropriate ratio P/SE, is less than α. Interpolation may be made in the table.

TABLE UA-5.1
VALUES OF Δ FOR JUNCTIONS AT THE LARGE CYLINDER FOR $\alpha \leqq 30$ deg

P/SE	0.001	0.002	0.003	0.004	0.005
Δ, deg	11	15	18	21	23
P/SE	0.006	0.007	0.008	0.009*	
Δ, deg	25	27	28.5	30	

*$\Delta = 30$ deg for greater values of P/SE

The cross-sectional area of the reinforcement ring shall be at least equal to that indicated by the following formula:

$$A = \frac{PR_L^2}{2SE}\left(1 - \frac{\Delta}{\alpha}\right) \tan \alpha \quad (1)$$

When the thickness, less corrosion allowance, of both the reducer and cylinder exceeds that required by the applicable design formulas, the minimum excess thickness may be considered to contribute to the required reinforcement ring in accordance with the following formula:

$$A_e = 4t_e \sqrt{R_L t_s} \quad (2)$$

Any additional area of reinforcement which is required shall be situated within a distance of $\sqrt{R_L t_s}$ from the junction of the reducer and the cylinder. The centroid of the added area shall be within a distance of $0.5\sqrt{R_L t_s}$ from the junction.

(c) Reinforcement shall be provided at the junction of the conical shell of a reducer without a flare and the small cylinder when the value of Δ obtained from Table UA-5.2, using the appropriate ratio P/SE, is less than α.

TABLE UA-5.2
VALUES OF Δ FOR JUNCTIONS AT THE SMALL CYLINDER FOR $\alpha \leqq 30$ deg

P/SE	0.002	0.005	0.010	0.02
Δ, deg	4	6	9	12.5
P/SE	0.04	0.08	0.10	0.125*
Δ, deg	17.5	24	27	30

*$\Delta = 30$ deg for greater values of P/SE

The cross-sectional area of the reinforcement ring shall be at least equal to that indicated by the following formula:

$$A = \frac{PR_s^2}{2SE}\left(1 - \frac{\Delta}{\alpha}\right) \tan \alpha \quad (3)$$

When the thickness, less corrosion allowance, of either the reducer or cylinder exceeds that required by the applicable design formula, the excess thickness may be considered to contribute to the required reinforcement ring in accordance with the following formula:

$$A_e = m\sqrt{R_s t}\{(t_c - t/\cos \alpha) + (t_s - t)\} \quad (4)$$

Any additional area of reinforcement which is required shall be situated within a distance of $\sqrt{R_s t_s}$ from the junction, and the centroid of the added area shall be within a distance of $0.5\sqrt{R_s t_s}$ from the junction.

(d) Reducers not described in Par. UG-36(e) (5), such as those made up of two or more conical frustums having different slopes, may be designed in accordance with subsection (e).

(e) When the half-apex angle α is greater than 30 deg, cone-to-cylinder junctions without a knuckle may be used, with or without reinforcing rings, if the design is based on special analysis, such as the beam-on-elastic-foundation analysis of Timoshenko, Hetenyi, or Watts and Lang. See Par. U-2(g). When such an analysis is made, the calculated localized stresses at the discontinuity shall not exceed the following values:

(1) (membrane hoop stress) + (average discontinuity hoop stress) shall not be greater than $1\frac{1}{2}SE$,

(2) (membrane longitudinal stress) + (discontinuity longitudinal stress due to bending) shall not be greater than $4SE$, where the "average discontinuity hoop stress" is the average hoop stress across the wall thickness due to the discontinuity at the junction, disregarding the effect of Poisson's ratio times the longitudinal stress at the surfaces.

The angle joint (see Par. UA-60(o)) between the cone and cylinder shall be designed equivalent to a double butt-welded joint, and because of the high bending stress, there shall be no weak

zones around the angle joint. The thickness of the cylinder may have to be increased to limit the difference in thickness so that the angle joint has a smooth contour.

(f) *Example 1:* Determine the required thickness of a conical head for the following conditions:

D = 200 in. (at junction with the cylinder);
α = 30 deg (tan α = 0.577, cos α = 0.866);
P = 50 psi; S = 13750 psi; E = 0.80.

Substituting in Equation (5), Par. UA-4(e)

$$t = \frac{50 \times 200}{2 \times 0.866\,(13750 \times 0.8 - 0.6 \times 50)} = 0.526 \text{ in.}$$

Example 2: A compression ring is to be used at the junction of conical head and shell of Example 1. Determine the required area of the compression ring. E = 1 (see Par. UA-5(a)).

$$\frac{P}{SE} = \frac{50}{13750 \times 1.00} = 0.0036$$

Entering Table UA-5.1, we find Δ = 19.8. Since α exceeds Δ, a compression ring is required.

Area required in compression ring, from Equation (1):

$$A = \frac{50\,(100)^2}{2\,(13750 \times 1.0)}\left(1 - \frac{19.8}{30}\right)0.577 = 3.55 \text{ sq in.}$$

Example 3: The conical head given in Example 1 is to be attached to the shell with a knuckle having a radius of 20 in. Find the thickness of the knuckle and the cone. (See Par. UG-32(g).)

Required thickness of the knuckle:

The inside diameter of the cone at the point tangent to the knuckle is

$$D_1 = 200 - 2 \times 20\,(1 - 0.866) = 194.64 \text{ in.}$$

$$L = \frac{D_1}{2 \cos \alpha} = \frac{194.64}{2 \times 0.866} = 112 \text{ in.}$$

$$\frac{L}{r} = \frac{112}{20} = 5.60$$

and from Table UA-4.2, M = 1.34.

Using formula (3) in Par. UA-4(d):

$$t = \frac{PLM}{2SE - 0.2P}$$

$$= \frac{50 \times 112 \times 1.34}{2 \times 13750 \times 0.80 - 0.2 \times 50} = 0.342 \text{ in.}$$

Required thickness of the cone:

$D = D_1$ = 194.64 in. cos α = 0.866

Using formula (5) in (e):

$$t = \frac{PD}{2 \cos \alpha\,(SE - 0.6P)}$$

$$= \frac{50 \times 194.64}{2 \times 0.866\,(13750 \times 0.80 - 0.6 \times 50)}$$

$$= 0.512 \text{ in.}$$

UA-6 Spherically Dished Covers (Bolted Heads)

(a) The symbols used in the formulas of this paragraph are defined as follows:

t = minimum required thickness of head plate after forming, inches,
L = inside spherical or crown radius, inches,
r = inside knuckle radius, inches,
P = design pressure (see Par. UG-21) or maximum allowable working pressure for existing vessels (see Par. UG-98), pounds per square inch,
S = maximum allowable stress value as given in Subsection C, pounds per square inch,
T = flange thickness, inches,
M_o = the total moment, inch pounds, determined as in Par. UA-50 for heads concave to pressure and Par. UA-55 for heads convex to pressure; except that for heads of the type shown in Fig. UA-6(d), H_D and h_D shall be as defined below, and an additional moment $H_r h_r$ (which may add or subtract) shall be included where:
H_r = radial component of the membrane load in the spherical segment = H_D cot β_1, pounds, acting at the intersection of the inside of the flange ring with the centerline of the dished cover thickness,
h_r = lever arm of force H_r about centroid of flange ring, inches,
H_D = axial component of the membrane load in the spherical segment, pounds, acting at the inside of the flange ring = $0.785B^2P$
h_D = radial distance from the bolt circle to the inside of the flange ring, inches.
β_1 = angle formed by the tangent to the centerline of the dished cover thickness at its point of intersection with the flange ring, and a line perpendicular to the axis of the dished cover

$$= \text{arc sin}\left(\frac{B}{2L + t}\right)$$

NOTE: Since $H_r h_r$ in some cases will subtract from the total moment, the moment in the flange ring when the internal pressure is zero may be the determining loading for the flange design.

A = outside diameter of flange, inches,
B = inside diameter of flange, inches,
C = bolt circle diameter, inches.

(b) *Heads Concave to Pressure* Circular spherically dished heads with bolting flanges, concave to the pressure and conforming to the several types illustrated in Fig. UA-6, shall be designed in accordance with the following formulas:

(1) Heads of the type shown in Fig. UA-6(a):

(a) The thickness of the head t, shall be determined by the appropriate formula in Par. UG-32;

(b) The head radius, L, or the knuckle radius r, shall not exceed the limitations given in Par. UG-32;

(c) The flange shall comply at least with the requirements of Fig. UA-48 and shall be designed in accordance with the provisions of Pars. UA-45 through UA-51. (Within the range of American Standards ASA B16.5-1961, the flange facings and drillings should conform to those Standards and the thickness specified therein shall be considered as a minimum requirement.)

(2) Heads of the type shown in Fig. UA-6(b) (no joint efficiency factor is required).

(a) Head thickness, $t = \frac{5PL}{6S}$

(b) Flange thickness, T:

For ring gasket, $T = \sqrt{\frac{M_o}{SB}\left[\frac{A + B}{A - B}\right]}$

For full face gasket,

$$T = 0.6\sqrt{\frac{P}{S}\left[\frac{B\,(A + B)\,(C - B)}{A - B}\right]}$$

NOTE: The radial components of the membrane load in the spherical segment are assumed to be resisted by its flange.

(Within the range of USAS B16.5-1961, the flange facings and drillings should conform to those Standards and the thickness specified therein shall be considered as a minimum requirement.)

(3) Heads of the type shown in Fig. UA-6(c) (no joint efficiency factor is required).

(a) Head thickness, $t = \frac{5PL}{6S}$

(b) Flange thickness,

For ring gasket, $t = Q\left[1 + \sqrt{1 + \frac{7.5M_o}{PQBL}}\right]$

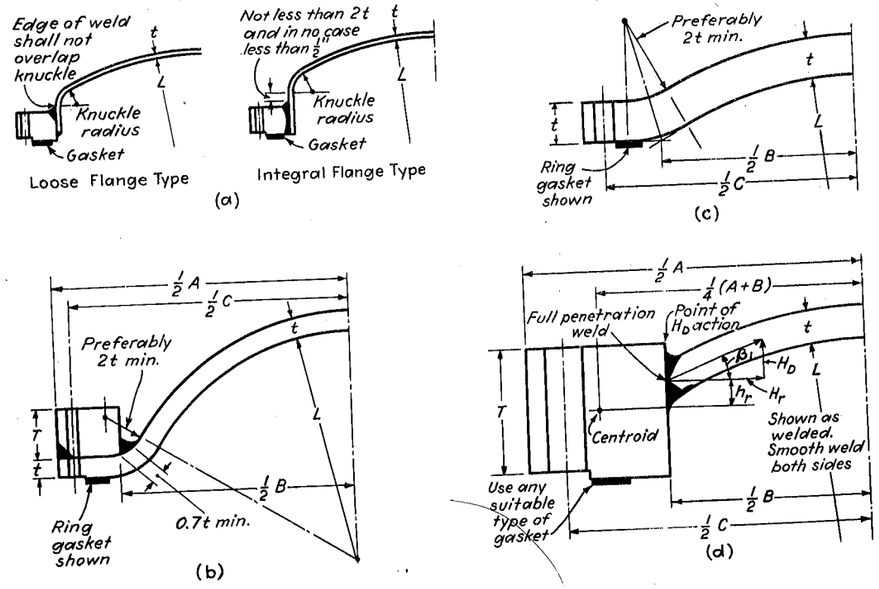

FIG. UA-6 SPHERICALLY DISHED STEEL PLATE COVERS WITH BOLTING FLANGES

For full face gasket,

$$t = Q\left[1 + \sqrt{1 + \frac{3(C-B)B}{QL}}\right]$$

where $Q = \frac{P}{S}\left(\frac{L}{4}\right)\left[\frac{1}{1 + 6\left(\frac{C-B}{C+B}\right)}\right]$

for heads with round bolting holes, or where

$$Q = \frac{P}{S}\left(\frac{L}{4}\right)\left[\frac{1}{1 + 2\left(\frac{C-B}{C+B}\right)}\right]$$

for heads with bolting holes slotted through edge of head.

(c) The larger of the values of t given by *(a)* and *(b)* shall be used.

(4) Heads of the type shown in Fig. UA-6 (d) (no joint efficiency factor is required).

(a) Head thickness, $t = \frac{5PL}{6S}$

(b) Flange thickness, $T = F\left[1 + \sqrt{1 + \frac{J}{F^2}}\right]$

where $F = \frac{PB\sqrt{4L^2 - B^2}}{8S(A-B)}$

and $J = \left(\frac{M_o}{SB}\right)\left(\frac{A+B}{A-B}\right)$

NOTE: These formulas are approximate in that they do not take into account continuity between the flange ring and the dished head. A more exact method of analysis which takes this into account may be used if it meets the requirements of Par. U-2. Such a method should parallel the method of analysis and allowable stresses for flange design in Appendix II.

(c) *Heads Convex to Pressure* Circular spherically dished heads convex to pressure shall be designed by the formulas in this paragraph and then the spherical segments shall be thickened, if necessary, to meet the requirements of Par. UG-33.

UA-7 Large Openings in Cylindrical Shells

The rules for reinforcement of openings given in Pars. UG-36 through UG-44 are intended to apply primarily to openings not exceeding the following:

For vessels 60 in. diameter and less: ½ the vessel diameter, but not to exceed 20 in.

For vessels over 60 in. diameter: ⅓ the vessel diameter, but not to exceed 40 in.

Larger openings should be given special attention and may be reinforced in any suitable manner at least complying with the code rules. It is recommended that the reinforcement provided be distributed close to the juncture. (A provision of about two-thirds of the required reinforcement within a distance of ¼ d on each side of the finished opening is suggested.) It is further recommended that special consideration be given to the fabrication details used and inspection employed on critical openings; reinforcement often may be advantageously obtained by use of heavier shell plate for a vessel course or inserted locally around the opening; welds may be ground to concave contour and the inside corners of the opening rounded to a generous radius to reduce stress concentrations when radiographic examination of welds is not practicable, liquid penetrant examination may be used with nonmagnetic materials and either liquid penetrant or magnetic particle inspection with ferro-magnetic materials. If magnetic particle inspection is employed, the Prod Method is preferred. The degree to which such measures should be used depends on the particular application and the severity of the intended service. Appropriate proof testing may be advisable in extreme cases of large openings approaching full vessel diameter, openings of unusual shape, etc. It is the committee's hope that research work now projected will result in the formulation of extended design rules for large openings.

APPENDIX II

Rules for Bolted Flange Connections

GENERAL

UA-45 Scope

(a) The rules in Appendix II apply specifically to the design of bolted flange connections for pressure vessels and are to be used in conjunction with the applicable requirements in Subsections A, B, and C of Section VIII. Appendix S provides discussion on Design Considerations for Bolted Flanged Connections.

These rules provide only for hydrostatic end loads and gasket seating. See Par. UA-55 for flanges subject to external pressure. Proper allowance shall be made if connections are subject to external loads other than external pressure.

(b) The design of a flange involves the selection of the gasket (material, type, and dimensions), flange facing, bolting, hub proportions, flange width, and flange thickness. (See Note 1, Par. UA-49(a)(1). Flange dimensions shall be such that the stresses in the flange, calculated in accordance with Par. UA-51, do not exceed the allowable flange stresses specified in Par. UA-52. All calculations shall be made on dimensions in the corroded condition.

(c) In the design of a bolted flange connection, complete calculations shall be made for two separate and independent sets of conditions, which are defined as follows:

(1) *Operating Conditions* The conditions required to resist the hydrostatic end force of the design pressure tending to part the joint, and to maintain on the gasket or joint-contact surface sufficient compression to assure a tight joint, all at the design temperature. The minimum load is a function of the design pressure, the gasket material, and the effective gasket or contact area to be kept tight under pressure, per Formula (1) in Par. UA-49(a)(1), and determines one of the two requirements for the amount of the bolting, A_{m1}. This load is also used for the design of the flange, per Formula (3) in Par. UA-49(c).

(2) *Gasket Seating* The conditions existing when the gasket or joint-contact surface is seated by applying an initial load with the bolts when assembling the joint, at atmospheric temperature and pressure. The minimum initial load considered to be adequate for proper seating is a function of the gasket material, and the effective gasket or contact area to be seated, per Formula (2) in Par. UA-49(a)(2), and determines the other of the two requirements for the amount of bolting, A_{m2}. For the design of the flange, this load is modified per Formula (4) in Par. UA-49(c), to take account of the operating conditions, when these govern the amount of bolting required, A_m, as well as the amount of bolting actually provided, A_b.

(d) It is recommended that bolted flange connections conforming to the standards[1] listed in Par. UG-44 be used for connections to external piping. These standards may be used for other bolted flange connections within the limits of size in the Standards and the pressure-temperature ratings permitted in Par. UG-44.

(e) Except as otherwise provided in (d), bolted flange connections for unfired pressure vessels shall satisfy the requirements in this Appendix.

UA-46 Materials

(a) Materials used in the construction of bolted flange connections shall comply with the requirements given in Pars. UG-5 through UG-14.

(b) Flanges made from ferritic steel and designed in accordance with this Appendix shall be given a normalizing or full-annealing heat-treatment when the thickness of the flange section exceeds 3 in.

(c) Material on which welding is to be performed shall be proved of good weldable quality. Satisfactory qualification of the welding procedure under Section IX of the Code is considered as proof. Welding shall not be performed on steel that has a carbon content greater than 0.35 per cent. All welding on flange connections shall comply with the requirements for postweld heat treatment given in this Division.

[1] The ratings in these standards are based on the hub dimensions given or on the minimum specified thickness of flanged fittings of integral construction. Flanges fabricated from rings may be used in place of the hub flanges in these standards provided that their strength, calculated by the rules in this Appendix, is not less than that calculated for the corresponding size of hub flange.

(d) Hubbed flanges shall not be machined from plate or bar stock material unless the material has been formed into a ring, and further provided that:

(1) In a ring formed from plate, the original plate surfaces are parallel to the axis of the finished flange. (This is not intended to imply that the original plate surface be present in the finished flange.)

(2) The joints in the ring are welded butt-joints that conform to the requirements of this Division. Thickness to be used to determine stress-relief and radiography requirements shall be the lesser of:

$$t \text{ or } \frac{(A - B)}{2}$$

where these symbols are as defined in Par. UA-47 (b).

(3) The back of the flange and the outer surface of the hub are inspected by non-destructive methods, such as magnetic particle inspection as per Appendix VI or liquid penetrant inspection to assure that these surfaces are free from defects.

(e) Bolts, studs, nuts, and washers shall comply with the requirements in this Division of Section VIII. It is recommended that bolts and studs have a nominal diameter of not less than ½ in. If bolts or studs smaller than ½ in. are used, ferrous bolting material shall be of alloy steel. Precautions shall be taken to avoid over-stressing small-diameter bolts.

PART A – FLANGES WITH RING TYPE GASKETS

The rules in Part A apply specifically to flanges with gaskets that are entirely within the circle enclosed by the bolt holes and with no contact outside this circle.

UA-47 Flanges Subject to Internal Pressure

(a) *Scope* The flange design methods outlined in this paragraph, together with Pars. UA-48, UA-49, UA-50, UA-51 and UA-52, are applicable to circular flanges under internal pressure. Modifications of these methods are outlined in Pars. UA-53 and UA-54, for the design of split and noncircular flanges.

(b) *Notation* The notations described below are used in the formulas for the design of flanges (see also Fig. UA-48).

A = outside diameter of flange or, where slotted holes extend to the outside of the flange, the diameter to the bottom of the slots, inches

A_b = actual total cross-sectional area of bolts at root of thread or section of least diameter under stress, square inches

A_m = total required cross-sectional area of bolts, taken as the greater of A_{m1} and A_{m2}, square inches

A_{m1} = total cross-sectional area of bolts at root of thread or section of least diameter under stress, required for the operating conditions, square inches, $= W_{m1}/S_b$

A_{m2} = total cross-sectional area of bolts at root of thread or section of least diameter under stress, required for gasket seating, square inches, $= W_{m2}/S_a$

B = inside diameter of flange, inches. When B is less than $20g_1$, it will be optional for the designer to substitute B_1 for B in the formula for longitudinal hub stress, S_H (see equation 6)

B_1 = $B + g_1$ for loose-type hub flanges and also for integral-type flanges when f is less than 1

B_1 = $B + g_0$ for integral-type flanges when f is equal to or greater than 1

b = effective gasket or joint-contact-surface seating width, inches (see Note 1, Par. UA-49 (a) (1))

$2b$ = effective gasket or joint-contact-surface pressure width, inches (see Note 1, Par. UA-49 (a) (1)

b_o = basic gasket seating width, inches (from Table UA-49.2)

C = bolt-circle diameter, inches

c = basic dimension used for the minimum sizing of welds, inches, equal to t_n or t_x, whichever is less

d = factor, for integral-type flanges

$$d = \frac{U}{V} h_o g_o^2$$

for loose-type flanges

$$d = \frac{U}{V_L} h_o g_o^2$$

e = factor, for integral-type flanges

$$e = \frac{F}{h_o}$$

for loose-type flanges

$$e = \frac{F_L}{h_o}$$

F = factor for integral-type flanges (from Fig. UA-51.2)

F_L = factor for loose-type flanges (from Fig. UA-51.4)

f = hub stress-correction factor for integral flanges from Fig. UA-51.6 (When greater than 1, this is the ratio of the stress in the small end of hub to the stress in the large end.) (For values below limit of figure use $f = 1$)

G = diameter at location of gasket load reaction. Except as noted in Sketch 1 of Fig. UA-48, G is defined as follows (see Table UA-49.2):
When $b_o \leq \frac{1}{4}$ inch, G = mean diameter of gasket contact face, inches
When $b_o > \frac{1}{4}$ inch, G = outside diameter of gasket contact face less $2b$, inches

g_o = thickness of hub at small end, inches

g_1 = thickness of hub at back of flange, inches

H = total hydrostatic end force, pounds $= 0.785 G^2 P$

H_D = hydrostatic end force on area inside of flange, pounds $= 0.785 B^2 P$

H_G = gasket load (difference between flange design bolt load and total hydrostatic end force), pounds $= W - H$

H_p = total joint-contact-surface compression load, pounds, $= 2b \times 3.14 GmP$

H_T = difference between total hydrostatic end force and the hydrostatic end force on area inside of flange, pounds, $= H - H_D$

h = hub length, inches

h_D = radial distance from the bolt circle, to the circle on which H_D acts, as prescribed in Par. UA-50, inches

h_G = radial distance from gasket load reaction to the bolt circle, inches, $= \frac{C - G}{2}$

h_o = factor $= \sqrt{Bg_o}$, inches

h_T = radial distance from the bolt circle to the circle on which H_T acts as prescribed in Par. UA-50, inches

K = ratio of outside diameter of flange to inside diameter of flange $= A/B$

L = factor $= \frac{te + 1}{T} + \frac{t^3}{d}$

M_D = component of moment due to H_D, inch-pounds, $= H_D h_D$

M_G = component of moment due to H_G, inch-pounds, $= H_G h_G$

M_o = total moment acting upon the flange, for the operating conditions or gasket seating, as may apply, inch-pounds (see Par. UA-50)

M_T = component of moment due to H_T, inch-pounds, $= H_T h_T$

m = gasket factor, obtain from Table UA-49.1 (see Note 1, Par. UA-49)

N = width, inches, used to determine the basic gasket seating width b_o, based upon the possible contact width of the gasket (see Table UA-49.2)

P = design pressure, pounds per square inch. For flanges subject to external pressure see Par. UA-55

R = radial distance from bolt circle to point of intersection of hub and back of flange, inches (integral and hub flanges), $= \frac{C - B}{2} - g_1$

S_a = allowable bolt stress at atmospheric temperature, pounds per square inch (given in Subsection C)

S_b = allowable bolt stress at design temperature, pounds per square inch (given in Subsection C)

S_f = allowable design stress for material of flange at design temperature (operating condition) or atmospheric temperature (gasket seating), as may apply, pounds per square inch (given in Subsection C)

S_n = allowable design stress for material of nozzle neck, vessel or pipe wall, at design temperature (operating condition) or atmospheric temperature (gasket seating), as may apply, pounds per square inch (given in Subsection C)

S_H = calculated longitudinal stress in hub, pounds per square inch

S_R = calculated radial stress in flange, pounds per square inch

S_T = calculated tangential stress in flange, pounds per square inch

T = factor involving K (from Fig. UA-51.1)

t = flange thickness, inches

t_n = nominal thickness of shell or nozzle wall to which flange or lap is attached, less corrosion allowance, inches

t_x = two times the thickness g_o, when the design is calculated as an integral flange, inches, or two times the thickness of shell or nozzle wall required for internal pressure, when the design is calculated as a loose flange, but not less than ¼ in., inches

U = factor involving K (from Fig. UA-51.1)

V = factor for integral-type flanges (from Fig. UA-51.3)

V_L = factor for loose-type flanges (from Fig. UA-51.5)

W = flange design bolt load, for the operating conditions or gasket seating, as may apply, pounds (see Par. UA-49(c))

W_{m1} = minimum required bolt load for the operating conditions, pounds (see Par. UA-49(a))

W_{m2} = minimum required bolt load for gasket seating, pounds (see Par. UA-49(a))

w = width, in inches, used to determine the basic gasket seating width b_o, based upon the contact width between the flange facing and the gasket (see Table UA-49.2)

Y = factor involving K (from Fig. UA-51.1)

y = gasket or joint-contact-surface unit seating load, pounds per square inch (see Note 1, Par. UA-49(a)(1))

Z = factor involving K (from Fig. UA-51.1)

UA-48 Circular Flange Types

(a) For purposes of computation, there are three types:

(1) *Loose-Type Flanges* This type covers those designs in which the flange has no direct connection to the nozzle neck, vessel, or pipe wall, and designs where the method of attachment is not considered to give the mechanical strength equivalent of integral attachment. See Fig. UA-48 (1), (1a), (2), (3) and (4) for typical loose-type flanges and the location of the loads and moments. Welds and other details of construction shall satisfy the dimensional requirements given in Fig. UA-48(1), (1a), (2), (3) and (4).

(2) *Integral-Type Flanges* This type covers designs where the flange is cast or forged integrally with the nozzle neck, vessel or pipe wall, butt-welded thereto, or attached by other forms of arc or gas welding of such a nature that the flange and nozzle neck, vessel, or pipe wall is considered to be the equivalent of an integral structure. In welded construction, the nozzle neck, vessel, or pipe wall is considered to act as a hub. See Fig. UA-48 (5), (6), (6a), (6b) and (7) for typical integral-type flanges and the location of the loads and moments. Welds and other details of construction shall satisfy the dimensional requirements given in Fig. UA-48 (5), (6), (6a), (6b) and (7).

(3) *Optional-Type Flanges* This type covers designs where the attachment of the flange to the nozzle neck, vessel, or pipe wall is such that the assembly is considered to act as a unit, which shall be calculated as an integral flange, except that for simplicity the designer may calculate the construction as a loose-type flange provided none of the following values is exceeded:

g_o = 5/8 inch; $\frac{B}{g_o}$ = 300; P = 300 psi;

, operating temperature = 700 F

See Fig. UA-48(8), (8a), (8b) and (9) for typical optional-type flanges. Welds and other details of construction shall satisfy the dimensional requirements given in Fig. UA-48(8), (8a), (8b) and (9).

UA-49 Bolt Loads

(a) *Required Bolt Loads* The flange bolt loads used in calculating the required cross-sectional area of bolts shall be determined as follows:

(1) The required bolt load for the operating conditions, W_{m1}, shall be sufficient to resist the hydrostatic end force, H, exerted by the maximum allowable working pressure on the area bounded by the diameter of gasket reaction, and, in addition, to maintain on the gasket or joint-contact-surface a compression load, H_p, which experience has shown to be sufficient to assure a tight joint. (This compression load is expressed as a multiple "m" of the internal pressure. Its value is a function of the gasket material and construction. See Note 1.)

NOTE 1: Tables UA-49.1 and UA-49.2 give a list of many commonly used gasket materials and contact facings, with suggested values of m, b, and y that have proved satisfactory in actual service. These values are suggested only and are not mandatory. Values that are too low may result in leakage at the joint, without affecting the safety of the design. The primary proof that the values are adequate is the hydrostatic test.

The required bolt load for the operating conditions, W_{m1}, is determined in accordance with Formula (1).

$$W_{m1} = H + H_p = 0.785G^2P + (2b \times 3.14GmP) \quad (1)$$

(2) Before a tight joint can be obtained it is necessary to seat the gasket or joint-contact surface properly by applying a minimum initial load (under atmospheric temperature conditions without the presence of internal pressure), which is a function of the gasket material and the effective gasket area to be seated. The minimum initial bolt load required for this purpose, W_{m2}, shall be determined in accordance with Formula (2)

$$W_{m2} = 3.14b\,Gy \quad (2)$$

The need for providing sufficient bolt load to seat the gasket or joint-contact surfaces in accordance

with Formula (2) will prevail on many low-pressure designs and with facings and materials that require a high seating load, and where the bolt load computed by Formula (1) for the operating conditions is insufficient to seat the joint. Accordingly, it is necessary to furnish bolting and to pretighten the bolts to provide a bolt load sufficient to satisfy both of these requirements, each one being individually investigated. When Formula (2) governs, flange proportions will be a function of the bolting instead of internal pressure.

(3) Bolt loads for flanges using gaskets of the self-energizing type differ from those shown above.

(a) The required bolt load for the operating conditions W_m, shall be sufficient to resist the hydrostatic end force H, exerted by the maximum allowable working pressure on the area bounded by the outside diameter of the gasket. H_p is to be considered as 0 (zero) for all self-energizing gaskets except certain seal configurations which generate axial loads which must be considered.

(b) W_{m2} = 0 (zero)

Self-energizing gaskets may be considered to require an inconsequential amount of bolting force to produce a seal. Bolting, however, must be pretightened to provide a bolt load sufficient to withstand the hydrostatic end force H.

(b) *Total Required and Actual Bolt Areas, A_m and A_b* The total cross-section area of bolts, A_m, required for both the operating conditions and gasket seating is the greater of the values for A_{m1} and A_{m2} where $A_{m1} = W_{m1}/S_b$ and $A_{m2} = W_{m2}/S_a$. A selection of bolts to be used shall be made such that the actual total cross-sectional area of bolts, A_b, will not be less than A_m.

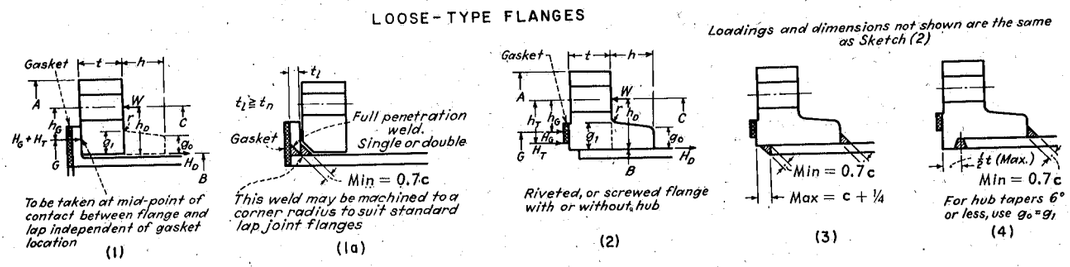

General Note: Fillet radius r to be at least 0.25g, but not less than 3/16 in. Raised, tongue-groove, male and female, and ring joint facings shall be in excess of the required minimum flange thickness t.

FIG. UA-48 TYPES OF FLANGES

TABLE UA-49.1
GASKET MATERIALS AND CONTACT FACINGS

Gasket Factors (*m*) for Operating Conditions and Minimum Design Seating Stress (*y*)
NOTE: This table gives a list of many commonly used gasket materials and contact facings with suggested design values of *m* and *y* that have generally proved satisfactory in actual service when using effective gasket seating width *b* given in Table UA-49.2. The design values and other details given in this table are suggested only and are not mandatory.

Gasket material		Gasket factor *m*	Min design seating stress *y*	Sketches and notes	Refer to Table UA-49.2: Use facing sketch	Use column	
Self-Energizing Types O Rings, Metallic, Elastomer other gasket types considered as self-sealing		0	0	–	–	–	
Elastomers without fabric or a high percentage of asbestos fiber: Below 75 shore Durometer 75 or higher Shore Durometer		0.50 1.00	0 200		1 (a, b, c, d) 4, 5		
Asbestos with a suitable binder for the operating conditions	1/8 thick 1/16 thick 1/32 thick	2.00 2.75 3.50	1600 3700 6500				
Elastomers with cotton fabric insertion		1.25	400	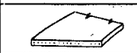			
Elastomers with asbestos fabric insertion, with or without wire reinforcement	3-ply	2.25	2200	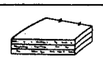			
	2-ply	2.50	2900				
	1-ply	2.75	3700				
Vegetable fiber		1.75	1100				
Spiral-wound metal, asbestos filled	Carbon Stainless or Monel	2.50 3.00	2900 4500		1 (a, b)		II
Corrugated metal, asbestos inserted or Corrugated metal, jacketed asbestos filled	Soft aluminum Soft copper or brass Iron or soft steel Monel or 4–6% chrome Stainless steels	2.50 2.75 3.00 3.25 3.50	2900 3700 4500 5500 6500				
Corrugated metal	Soft aluminum Soft copper or brass Iron or soft steel Monel or 4–6% chrome Stainless steels	2.75 3.00 3.25 3.50 3.75	3700 4500 5500 6500 7600	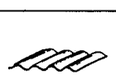	1 (a, b, c, d)		
Flat metal jacketed asbestos filled	Soft aluminum Soft copper or brass Iron or soft steel Monel 4–6% chrome Stainless steels	3.25 3.50 3.75 3.50 3.75 3.75	5500 6500 7600 8000 9000 9000	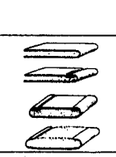	1a, 1b, 1c*, 1d*, 2*		
Grooved metal	Soft aluminum Soft copper or brass Iron or soft steel Monel or 4–6% chrome Stainless steels	3.25 3.50 3.75 3.75 4.25	5500 6500 7600 9000 10100	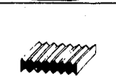	1 (a, b, c, d) 2, 3		
Solid flat metal	Soft aluminum Soft copper or brass Iron or soft steel Monel or 4–6% chrome Stainless steels	4.00 4.75 5.50 6.00 6.50	8800 13000 18000 21800 26000		1 (a, b, c, d) 2, 3, 4, 5		I
Ring joint	Iron or soft steel Monel or 4–6% chrome Stainless steels	5.50 6.00 6.50	18000 21800 26000	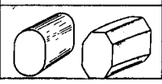	6		

*The surface of a gasket having a lap should not be against the nubbin.

TABLE UA-49.2 EFFECTIVE GASKET WIDTH

	FACING SKETCH Exaggerated	BASIC GASKET SEATING WIDTH b_o COLUMN I	COLUMN II
1a	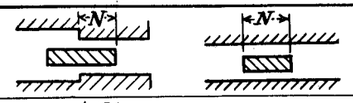	$\frac{N}{2}$	$\frac{N}{2}$
1b*	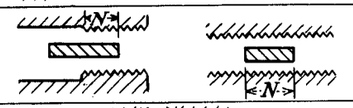		
1c	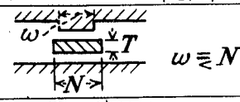 $w \geqq N$	$\frac{w+T}{2}; \left(\frac{w+N}{4} \max\right)$	$\frac{w+T}{2}; \left(\frac{w+N}{4} \max\right)$
1d*	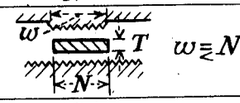 $w \geqq N$		
2	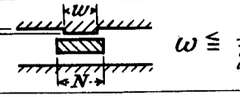 1/64" Nubbin; $w \leqq \frac{N}{2}$	$\frac{w+N}{4}$	$\frac{w+3N}{8}$
3	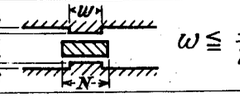 1/64" Nubbin; $w \leqq \frac{N}{2}$	$\frac{w}{2}; \left(\frac{N}{4} \min\right)$	$\frac{w+N}{4}; \left(\frac{3N}{8} \min\right)$
4*	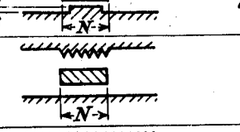	$\frac{3N}{8}$	$\frac{7N}{16}$
5*	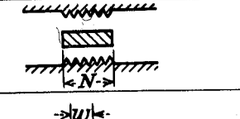	$\frac{N}{4}$	$\frac{3N}{8}$
6	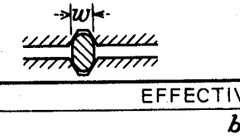	$\frac{w}{8}$	

EFFECTIVE GASKET SEATING WIDTH "b"

$b = b_o$, when $b_o \leqq 1/4"$

$b = \frac{\sqrt{b_o}}{2}$, when $b_o > 1/4"$

LOCATION OF GASKET LOAD REACTION

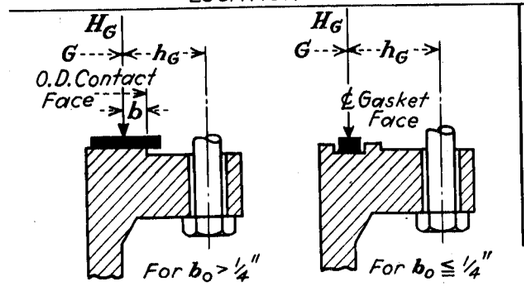

NOTE: The gasket factors listed only apply to flanged joints in which the gasket is contained entirely within the inner edges of the bolt holes

*Where serrations do not exceed 1/64" depth and 1/32" width spacing, sketches 1b and 1d shall be used

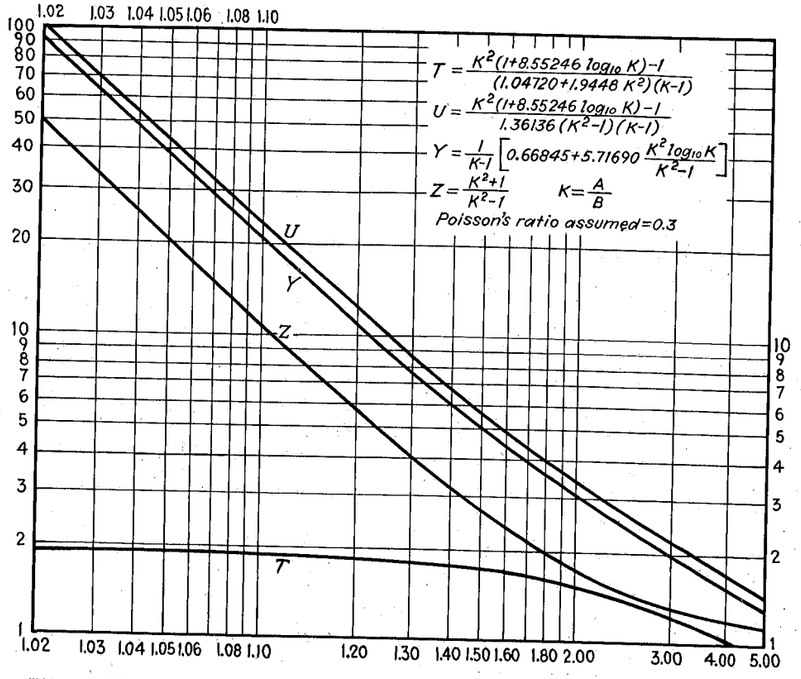

FIG. UA-51.1 VALUES OF T, U, Y, AND Z (TERMS INVOLVING K) ($K = A/B$)

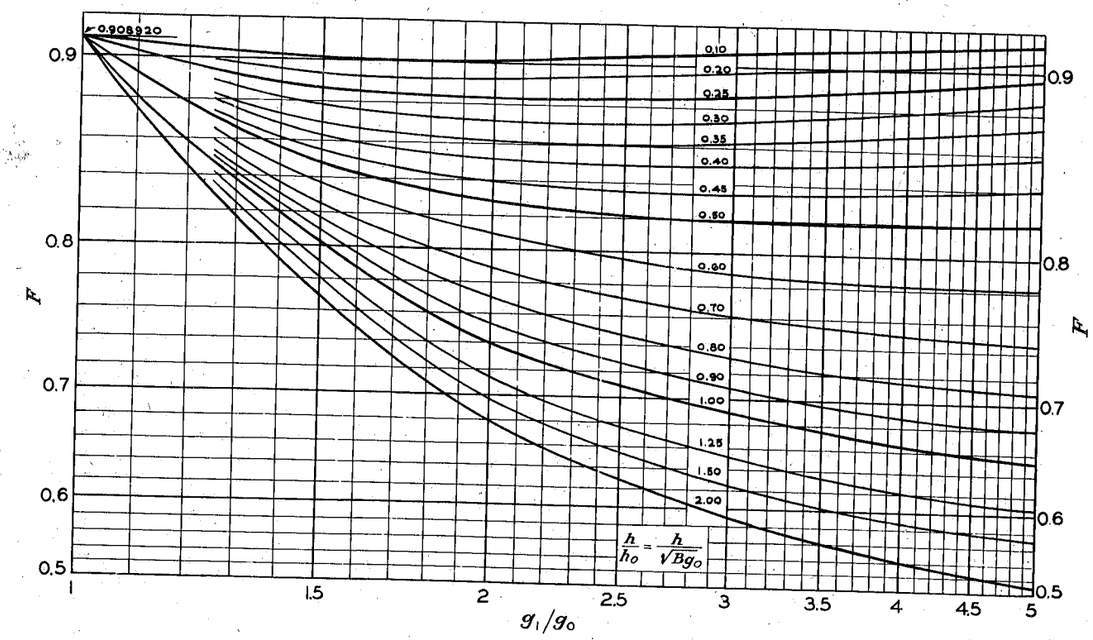

FIG. UA-51.2 VALUES OF F (INTEGRAL FLANGE FACTORS)

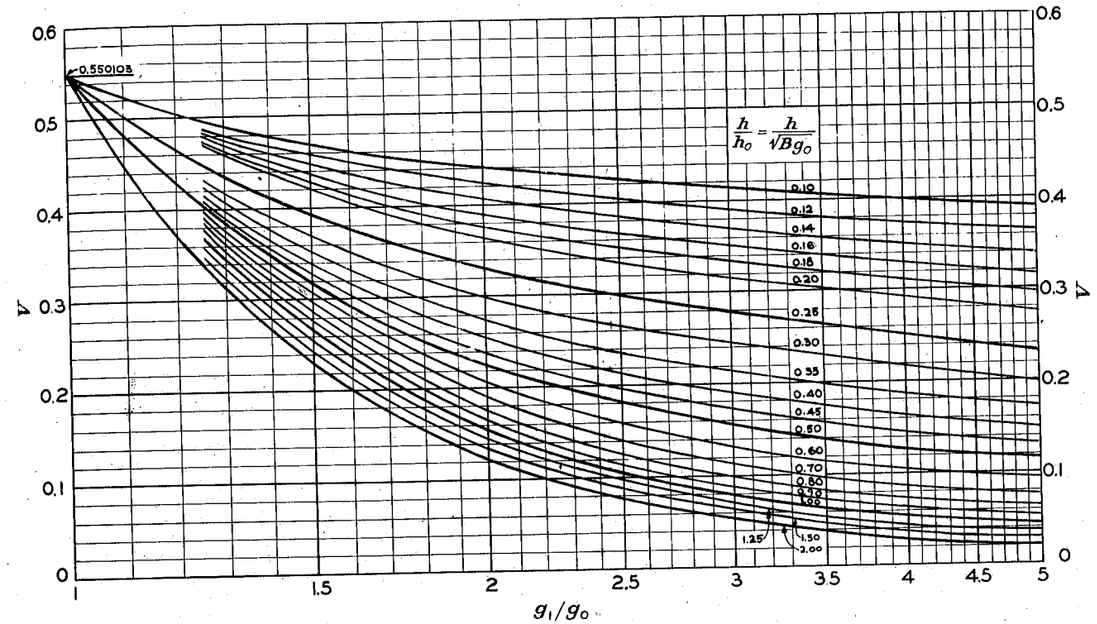

FIG. UA-51.3 VALUES OF V (INTEGRAL FLANGE FACTORS)

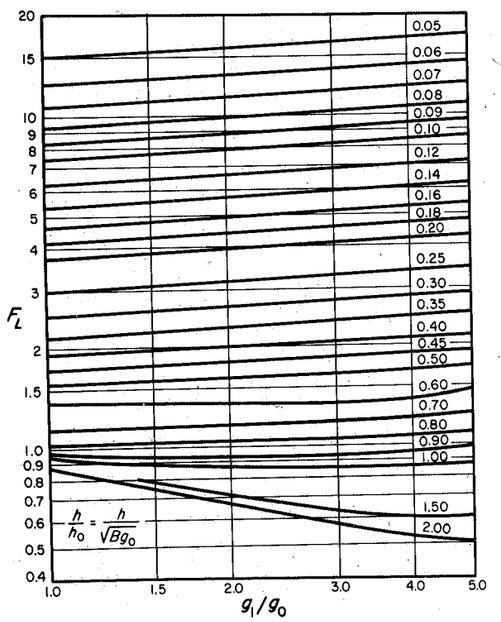

FIG. UA-51.4 VALUES OF F_L (LOOSE HUB FLANGE FACTORS)

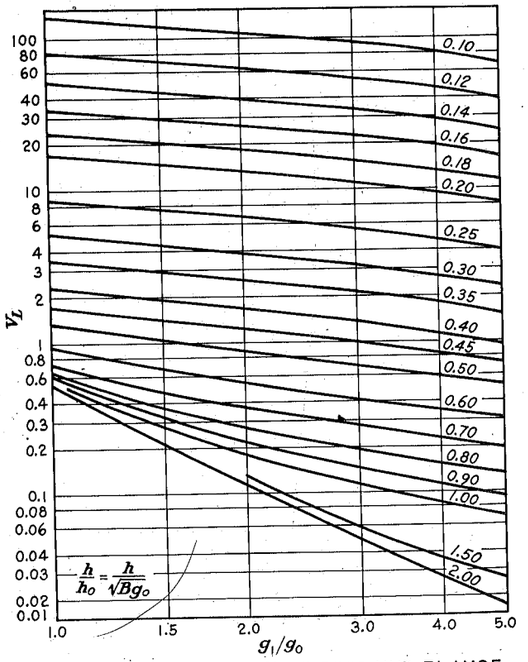

FIG. UA-51.5 VALUES OF V_L (LOOSE HUB FLANGE FACTORS)

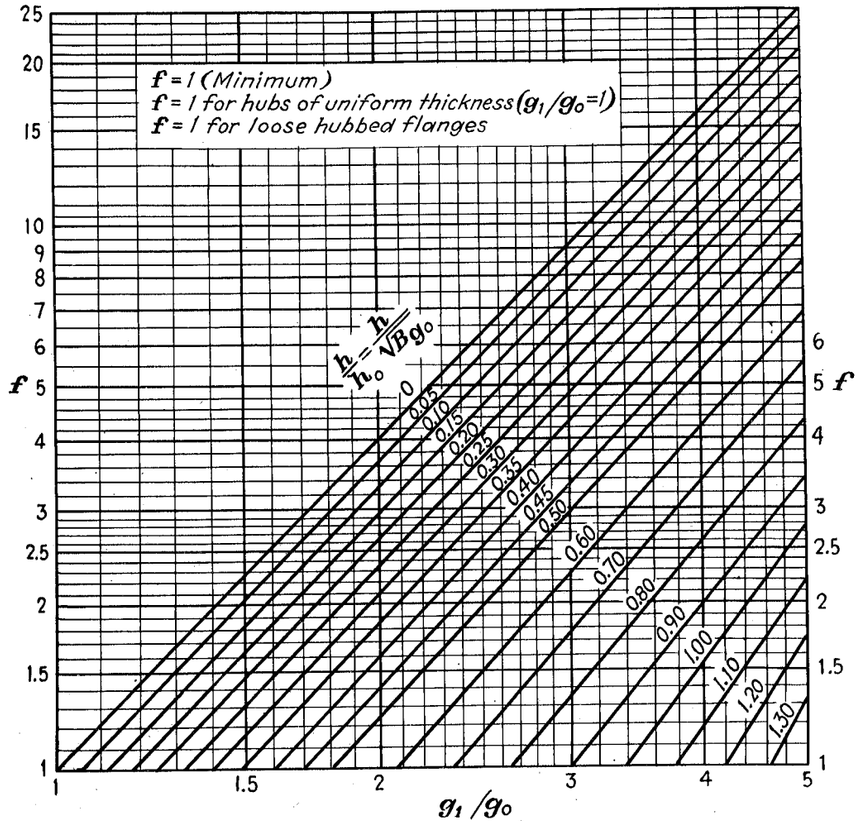

FIG. UA-51.6 VALUES OF f (HUB STRESS CORRECTION FACTOR)

(e) *Flange Design Bolt Load, W* The bolt loads used in the design of the flange shall be the values obtained from Formulas (3) and (4). For Operating Conditions

$$W = W_{m1} \qquad (3)$$

For Gasket Seating

$$W = \frac{(A_m + A_b)\, S_a}{2} \qquad (4)$$

In addition to the minimum requirements for safety, Formula (4) provides a margin against abuse of the flange from overbolting. Since margin against such abuse is needed primarily for the initial, bolting-up operation which is done at atmospheric temperature and before application of internal pressure, the flange design is required to satisfy this loading only under such conditions (see Note 2).

NOTE 2: Where additional safety against abuse is desired, or where it is necessary that the flange be suitable to withstand the full available bolt load $A_b \times S_a$, the flange may be designed on the basis of this latter quantity.

(3) Bolt loads for flanges using gaskets of the self energizing type differ from those shown above.

(a) The required bolt load for the operating conditions W_m, shall be sufficient to resist the hydrostatic end force H, exerted by the maximum allowable working pressure on the area bounded by the outside diameter of the gasket. H_p is to be considered as 0 (zero) for all self-energizing gaskets except certain seal configurations which generate axial loads which must be considered.

(b) $W_{m2} = 0$ (zero)

Self-sealing gaskets may be considered to require an inconsequential amount of bolting force to produce a seal. Bolting, however, must be pre-

tightened to provide a bolt load sufficient to withstand the hydrostatic end force H.

UA-50 Flange Moments

In the calculation of flange stresses, the moment of a load acting on the flange is the product of the load and its moment arm. The moment arm is determined by the relative position of the bolt circle with respect to that of the load producing the moment (see Fig. UA-48). No consideration shall be given to any possible reduction in moment arm due to cupping of the flanges or due to inward shifting of the line of action of the bolts as a result thereof.

For the operating conditions, the total flange moment, M_o, is the sum of the three individual moments, M_D, M_T, and M_G, as defined in Par. UA-47 (b) and based on the flange design bolt load of Formula (3) with moment arms as given in Table UA-50.

For gasket seating, the total flange moment, M_o, is based on the flange design bolt load of Formula (4), which is opposed only by the gasket load, in which case

$$M_o = W\, \frac{(C - G)}{2} \qquad (5)$$

UA-51 Calculation of Flange Stresses

The stresses in the flange shall be determined for both the operating conditions and gasket seating, whichever controls, in accordance with the following formulas:

(1) For integral-type flanges and all hub-type flanges:

$$\text{Longitudinal hub stress } S_H = \frac{fM_o}{Lg_1^2B} \qquad (6)$$

$$\text{Radial flange stress } S_R = \frac{(1.33te + 1)\, M_o}{Lt^2B} \qquad (7)$$

$$\text{Tangential flange stress } S_T = \frac{YM_o}{t^2B} - ZS_R \qquad (8)$$

(2) For loose-type ring flanges (including optional type calculated as loose type) having a rectangular cross section

$$S_T = \frac{YM_o}{t^2B} \qquad (9)$$

$$S_R = 0 \qquad S_H = 0$$

TABLE UA-50
MOMENT ARMS FOR FLANGE LOADS UNDER OPERATING CONDITIONS

	h_D	h_T	h_G
Integral-type flanges (see Fig. UA-48 (5), (6), (6a), (6b), (7), (8), (8a), (8b), and (9))	$R + 0.5g_1$	$\frac{R + g_1 + h_G}{2}$	$\frac{C - G}{2}$
Loose-type, except lap-joint flanges (see Fig. UA-48 (2), (3) and (4)); and optional-type flanges (see Fig. UA-48 (8), (8a), (8b), and (9))	$\frac{C - B}{2}$	$\frac{h_D + h_G}{2}$	$\frac{C - G}{2}$
Lap-joint flanges (see Fig. UA-48 (1))	$\frac{C - B}{2}$	$\frac{C - G}{2}$	$\frac{C - G}{2}$

UA-52 Allowable Flange Design Stresses

(a) The flange stresses calculated by the formulas in Par. UA-51 shall not exceed the following values:

(1) Longitudinal hub-stress S_H not greater than S_f for cast iron[1] and, except as otherwise limited by (1)(a) and (1)(b), not greater than $1.5\,S_f$ for materials other than cast iron.

(a) Longitudinal hub-stress S_H not greater than the smaller of $1.5S_f$ or $1.5\,S_n$ for optional-type flanges designed as integral (Fig. UA-48(8), (8a), (8b) and (9)), also integral type (Fig. UA-48(7) where the neck material constitutes the hub of the flange.

(b) Longitudinal hub-stress S_H not greater than the smaller of $1.5S_f$ or $2.5S_n$ for integral-type flanges with hub welded to the neck, pipe or vessel wall (Fig. UA-48 (6), (6a) and (6b)).

(2) Radial flange stress S_R not greater than S_f.

(3) Tangential flange stress S_T not greater than S_f.

(4) Also $\frac{S_H + S_R}{2}$ not greater than S_f and $\frac{S_H + S_T}{2}$ not greater than S_f.

(b) For hub flanges attached as shown in Fig. UA-48 (2), (3), and (4), the nozzle neck, vessel or pipe wall shall not be considered to have any value as a hub.

(c) In the case of loose-type flanges with laps, as shown in Fig. UA-48 (1), where the gasket is so located that the lap is subjected to shear, the shearing stress shall not exceed 0.8 times S_n for the material of the lap, as defined in UA-47 (b). In the case of welded flanges, shown in Fig. UA-48 (3), (4), (7), (8), (8a) and (8b) where the nozzle neck, vessel or pipe wall

[1] When the flange material is cast iron, particular care should be taken when tightening the bolts to avoid excessive stress that may break the flange; an attempt should be made to apply no greater wrenching effort than is needed to assure tightness in the hydrostatic test.

extends near to the flange face and may form the gasket contact face, the shearing stress carried by the welds shall not exceed 0.8 times S_n. The shearing stress shall be calculated on the basis of H_p, or W_{m2} as defined in Par. UA-47(b), whichever is greater. Similar cases where flange parts are subjected to shearing stress shall be governed by the same requirements.

UA-53 Split Loose Flanges[1]

Loose flanges split across a diameter and designed under the rules given in Part A of this Appendix may be used under the following provisions:

(a) When the flange consists of a single split flange or flange ring, it shall be designed as if it were a solid flange (without splits), using 200 per cent of the total moment M_0 as defined in Par. UA-50.

(b) When the flange consists of two split rings each ring shall be designed as if it were a solid flange (without splits), using 75 per cent of the total moment M_0 as defined in Par. UA-50. The pair of rings shall be assembled so that the splits in one ring shall be 90 deg from the splits in the other ring.

(c) The splits should preferably be midway between bolt holes.

UA-54 Non-Circular Shaped Flanges with Circular Bore

The outside diameter A for a non-circular flange with a circular bore shall be taken as the diameter of the largest circle, concentric with the bore, inscribed entirely within the outside edges of the flange. Bolt loads and moments, as well as stresses, are then calculated as for circular flanges, using a bolt circle drawn through the centers of the outermost bolt holes.

UA-55 Flanges Subject to External Pressure

(a) The design of flanges for external pressure only (see Par. UG-99(f))[2] shall be based on the formulas given in Par. UA-51 for internal pressure except that for operating conditions:

$$M_0 = H_D(h_D - h_G) + H_T(h_T - h_G) \quad (10)$$

for gasket seating

$$M_0 = Wh_G \quad (11)$$

in the above formulas

$$W = \frac{A_{m2} + A_b}{2} S_a$$

$$H_D = 0.785B^2P_e$$

$$H_T = H - H_D$$

$$H = 0.785G^2P_e$$

P_e = external design pressure, pounds per square inch. See Par. UA-47(b) for definitions of other symbols.

(b) When flanges are subject at different times during operation to external or internal pressure, the design shall satisfy the external pressure design requirements given in (a) of this paragraph and the internal pressure design requirements given elsewhere in this Appendix.

NOTE: The combined force of external pressure and bolt loading may plastically deform certain gaskets to result in loss of gasket contact pressure when the connection is depressurized. To maintain a tight joint when the unit is repressurized, consideration should be given to gasket and facing details, so that excessive deformation of the gasket will not occur. Joints subject to pressure reversals, such as in heat exchanger floating heads, are in this type of service.

PART B – FLANGES WITH OTHER THAN RING TYPE GASKETS

UA-56

The rules in Part A shall not be construed to prohibit the use of other types of bolted flanged connections, such as flanges using full-face gaskets,[3] or other means of fixing or clamping the flange at the bolt circle to provide effective restraint against flange deflection. Such designs may be used provided they are designed in accordance with good engineering practice, and the method of design is acceptable to the authorized inspector.

[1] Loose flanges of the type shown in Fig. UA-48(1) are of the split design when it is necessary to install them after heat-treatment of a stainless steel vessel, or when for any reason it is desired to have them completely removable from the nozzle neck or vessel.

[2] When internal pressure occurs only during the required pressure test, the design may be based on external pressure, and auxiliary devices such as clamps may be used during the application of the required test pressure.

[3] See also Par. UA-6(b)(2) and (b)(3).

APPENDIX III

Definitions

UA-60 Terms Relating to Pressure Vessels

(a) *Maximum Allowable Working Pressure* The maximum gage pressure permissible at the top of a completed vessel in its operating position for a designated temperature. This pressure is based on calculations for every element of the vessel using nominal thicknesses exclusive of allowances for corrosion and thickness required for loadings other than pressure (see Par. UG-98). It is the basis for the pressure setting of the pressure relieving devices protecting the vessel. The design pressure (see (b)) may be used in place of the maximum allowable working pressure in all cases in which calculations are not made to determine the value of the maximum allowable working pressure.

(b) *Design Pressure* The pressure used in the design of a vessel for the purpose of determining the minimum permissible thickness or physical characteristics of the different parts of the vessel. When applicable, static head shall be added to the design pressure to determine the thickness of any specific part of the vessel (see Par. UG-21).

(c) *Maximum Allowable Stress Value* The maximum unit stress permissible for any specified material that may be used in the design formulas given in this Division (see Par. UG-23).

(d) *Normal Operation* Operation within the design limits[1] for which the vessel has been stamped. (See Par. UG-116(a).)

(e) *Basis for Calculated Test Pressure* The requirements for determining the test pressure based on calculations are outlined in Par. UG-99(c) for the hydrostatic test and in Par. UG-100(b) for the pneumatic test. The basis for calculated test pressure in either of these paragraphs is the highest permissible internal pressure, as determined by the design formulas, for each element of the vessel using nominal thicknesses with corrosion allowances included and using the allowable stress values given in Subsection C for the temperature of the test.

(f) *Operating Pressure* The pressure at the top of a pressure vessel at which it normally operates. It shall not exceed the maximum allowable working pressure and it is usually kept at a suitable level below the setting of the pressure relieving devices to prevent their frequent opening.

(g) *Operating or Working Temperature* The temperature that will be maintained in the metal of the part of the vessel being considered for the specified operation of the vessel (see Pars. UG-20 and UG-23).

(h) *Thickness of Vessel Wall*

(1) The "required thickness" is that computed by the formulas in this Division, before corrosion allowance is added (see Par. UG-22).

(2) The "design thickness" is the sum of the required thickness and the corrosion allowance (see Par. UG-25).

(3) The "nominal thickness" is the thickness selected as commercially available, and as supplied to the manufacturer; it may exceed the design thickness.

(i) *Efficiency of a Joint*

(1) *Welded Joint* The efficiency of a welded joint is expressed as a numerical (decimal) quantity and is used in the design of a joint as a multiplier of the appropriate allowable stress value taken from the applicable table in Subsection C.

(2) *Riveted Joint* The efficiency of a riveted joint is a reduction (decimal) factor which expresses the ratio of the lowest computed working strength of the joint for all the ways in which it might normally fail under a bursting pressure to the computed working strength of the solid plate adjacent to the joint, using the appropriate allowable stress values taken from the applicable table in Subsection C.

(j) *Radiographing (RT)* The process of passing electronic radiations through an object and obtaining a record of its soundness upon a sensitized film.

(k) *Magnetic Particle Examination (MT)* A

[1] Any coincident pressure and temperature during a specific operation are permissible, provided they do not constitute a more severe condition than that assumed in the design of the vessel; that is, if the resultant stresses as determined by the design formulas do not exceed the applicable stress values given in the tables in Subsection C; and assuming that any extra metal thickness added, or remaining, for corrosion allowance (and if still so needed) is gone.

method of detecting cracks and similar discontinuities at or near the surface in iron and the magnetic alloys of steel. It consists of properly magnetizing the material and applying finely divided magnetic particles which form patterns indicating the discontinuities.

(l) *Liquid Penetrant Examination (PT)* A method of nondestructive examination which provides for the detection of discontinuities open to the surface in ferrous and nonferrous materials which are nonporous. Typical discontinuities detectable by this method are cracks, seams, laps, cold shuts and laminations.

(m) *Ultrasonic Examination (UT)* A nondestructive means for locating and identifying internal discontinuities by detecting the reflections they produce of a beam of ultrasonic vibrations.

(n) *Bolt* A threaded fasteners with a head on one end.

(o) *Stud* A threaded fastener without a head, with threads on one end, or both ends or threaded full length.

(p) *Clad Vessel* A vessel made from plate having a corrosion-resistant material integrally bonded to a base of less resistant material.

(q) *Lined Vessel* A vessel having a corrosion-resistant lining attached intermittently to the vessel wall.

(r) *Layer or Laminated Vessel* A vessel having a shell which is made up of two or more separate layers.

(s) *Terms Relating to Welding:*

Angle Joint – A joint between two members located in intersecting planes between zero (a butt joint) and 90 deg (a corner joint).

Arc Welding – A group of welding processes wherein coalescence is produced by heating with an electric arc or arcs, with or without the application of pressure and with or without the use of filler metal.

Atomic Hydrogen Welding – An arc-welding process wherein coalescence is produced by heating with an electric arc maintained between two metal electrodes in an atmosphere of hydrogen. Shielding is obtained from the hydrogen. Pressure may or may not be used and filler metal may or may not be used.

Automatic Welding – Welding with equipment which performs the entire welding operation without constant observation and adjustment of the controls by an operator. The equipment may or may not perform the loading and unloading of the work.

Backing – Material (metal, weld metal, asbestos, carbon, franular flux, etc.) backing up the joint during welding to facilitate obtaining a sound weld at the root.

Base Metal – The metal to be welded or cut.

Butt Joint – A joint between two members lying approximately in the same plane.

Corner Joint – A joint between two members located approximately at right angles to each other in the form of an L.

Double-Welded Butt Joint – A butt joint welded from both sides.

NOTE: A joint with filler metal added from one side only may be considered equivalent to a double-welded butt joint only within the limitations of Type No. (1) of Table UW-12.

Double-Welded Lap Joint – A lap joint in which the overlapped edges of the members to be joined are welded along the edges of both members.

Edge Joint – A joint between the edges of two or more parallel or nearly parallel members.

Filler Metal – Metal to be added in making a weld.

Fillet Weld – A weld of approximately triangular cross section joining two surfaces approximately at right angles to each other in a lap joint, tee joint, or corner joint.

Forge Welding – A group of welding processes wherein coalescence is produced by heating in a forge or other furnace and by applying pressure or blows.

Full Fillet Weld – A fillet weld whose size is equal to the thickness of the thinner member joined.

Fusion – The melting together of filler metal and base metal, or of base metal only, which results in coalescence.

Gas Metal-Arc Welding – An arc-welding process wherein coalescence is produced by heating with an electric arc between a filler metal (consumable) electrode and the work. Shielding is obtained from a gas, a gas mixture (which may contain an inert gas) or a mixture of a gas and a flux. (This process has sometimes been called Mig Welding.)

Gas Tungsten-Arc Welding – An arc-welding process wherein coalescence is produced by heating with an electric arc between a single tungsten (nonconsumable) electrode and the work. Shielding is obtained from a gas or gas mixture (which may contain an inert gas). Pressure may or may not be used and filler metal may or may not be used. (This process has sometimes been called Tig welding.)

Gas Welding – A group of welding processes wherein coalescence is produced by heating with a gas flame or flames with or without the application of pressure, and with or without the use of filler metal.

Groove Weld – A weld made in the groove between two members to be joined.

Heat-Affected Zone – That portion of the base metal which has not been melted, but whose mechanical properties or microstructures have been altered by the heat of welding or cutting.

Induction Welding – A welding process wherein coalescence is produced by the heat obtained from resistance of the work to the flow of induced electric current, with or without the application of pressure.

Joint Penetration – The minimum depth a groove weld extends from its face into a joint, exclusive of reinforcement.

Lap Joint – A joint between two overlapping members.

Machine Welding – Welding with equipment which performs the welding operation under the observation and control of an operator. The equipment may or may not perform the loading and unloading of the work.

Manual Welding – Welding wherein the entire welding operation is performed and controlled by hand.

Overlap – Protrusion of weld metal beyond the bond at the toe of the weld.

Oxyacetylene Welding – A gas-welding process wherein coalescence is produced by heating with a gas flame or flames obtained from the combustion of acetylene with oxygen, with or without the application of pressure and with or without the use of filler metal.

Oxygen Cutting – A group of cutting processes wherein the severing of metals is effected by means of the chemical reaction of oxygen with the base metal at elevated temperatures. In the case of oxidation-resistant metals the reaction is facilitated by use of a flux or metal powder.

Oxy-hydrogen Welding – A gas-welding process wherein coalescence is produced by heating with a gas flame or flames obtained from combustion of hydrogen with oxygen, without the application of pressure and with or without the use of filler metal.

Plug Weld – A circular weld made through a hole in one member of a lap or tee joint joining that member to the other. The walls of the hole may or may not be parallel and the hole may be partially or completely filled with weld metal. (A fillet-welded hole or a spot weld should not be construed as conforming to this definition.)

Porosity – Gas pockets or voids in metal.

Postweld Heat Treatment – Uniform heating of a structure or portion thereof to a sufficient temperature, below the critical range, to relieve the major portion of the residual stresses, followed by uniform cooling.

Pressure-Gas Welding – A gas welding process wherein coalescence is produced simultaneously over the entire area of abutting surfaces, by heating with gas flames obtained from the combustion of a fuel gas with oxygen and by the application of pressure without the use of filler metal.

Pressure Welding – Any welding process or method wherein pressure is used to complete the weld.

Reinforcement of Weld – Weld metal on the face of a groove weld in excess of the metal necessary for the specified weld size.

Resistance Welding – A group of welding processes wherein coalescence is produced by the heat obtained from resistance of the work to the flow of electric current in a circuit of which the work is a part, and by the application of pressure.

Seal Weld – Any weld used primarily to obtain tightness.

Semi-Automatic Arc Welding – Arc welding with equipment which controls only the filler metal feed. The advance of the welding is manually controlled.

Shielded Metal-Arc Welding – An arc-welding process wherein coalescence is produced by heating with an electric arc between a covered metal electrode and the work. Shielding is obtained from decomposition of the electrode covering. Pressure is not used and filler metal is obtained from the electrode.

Single-Welded Butt Joints – A butt joint welded from one side only.

Single-Welded Lap Joint – A lap joint in which the overlapped edges of the members to be joined are welded along the edge of one member.

Size of Weld:

Groove Weld – The joint penetration (depth of chamfering plus the root penetration when specified).

Fillet Weld – *For equal-leg fillet welds,* the leg length of the largest isosceles right-triangle which can be inscribed within the fillet-weld cross section.

For unequal-leg fillet welds, the leg lengths of the largest right-triangle which can be inscribed within the fillet-weld cross section.

Slag Inclusion – Non-metallic solid material entrapped in weld metal or between weld metal and base metal.

Submerged Arc Welding – An arc-welding process wherein coalescence is produced by heating with an electric arc or arcs between a bare metal electrode or electrodes and the work. The welding is shielded by a blanket of granular, fusible material on the work. Pressure is not used and filler metal is obtained from the electrode and sometimes from a supplementary welding rod.

Tee Joint – A joint between two members located approximately at right angles to each other in the form of a T.

Thermit Welding – A group of welding processes wherein coalescence is produced by heating with superheated liquid metal and slag resulting from a chemical reaction between a metal oxide and aluminum, with or without the application of pressure. Filler metal, when used, is obtained from the liquid metal.

Throat of a Fillet Weld:

Theoretical – The distance from the beginning of the root of the joint perpendicular to the hypotenuse of the largest right-triangle that can be inscribed within the fillet-weld cross section.

Actual – The shortest distance from the root of a fillet weld to its face.

Undercut – A groove melted into the base metal adjacent to the toe of a weld and left unfilled by weld metal.

Weld – A localized coalescence of metal wherein coalescence is produced by heating to suitable temperatures, with or without the application of pressure, and with or without the use of filler metal. The filler metal has a melting point approximately the same as the base metals.

Weld Metal – That portion of a weld which has been melted during welding.

Welded Joint – A union of two or more members produced by the application of a welding process.

Welder – One who is capable of performing a manual or semi-automatic welding operation.

Welding Operator – One who operates machine or automatic welding equipment.

APPENDIX IV
Porosity Charts

UA-65 Acceptance Standards for Radiographically Determined Porosity In Welds

(a) These standards are applicable to ferritic, austenitic, and nonferrous materials.

(b) The total area of porosity as determined from the radiographic film shall not exceed $0.060T$ square inches in any six inch length of weld, where T is the thickness of the weld. If the weld is less than six inches long, the total area of porosity will be reduced in proportion.

(1) The maximum pore dimension shall be 20 per cent of T, or ⅛ in., whichever is smaller except that an isolated pore separated from an adjacent pore by one inch or more may be 30 per cent of T, or ¼ in., whichever is less.

(2) Dark images of a generally circular or oval shape shall be interpreted as porosity for the purposes of this standard.

(c) The porosity charts in this Appendix illustrate various types of assorted and uniform, randomly dispersed porosity indications. These charts for each thickness represent the maximum acceptable porosity. The charts represent full scale six inch radiographs, and shall not be enlarged or reduced. The porosity distributions shown are not necessarily the patterns that may appear on the radiograph, but are typical of the number and size of indications permitted. When porosity indications differ significantly from the porosity charts, the actual numbers and sizes of the pores may be measured and the total area of porosity calculated.

(d) In any one inch length of weld or $2T$, whichever is smaller, porosity may be clustered to a concentration four times that permitted by $0.06T$. Such clustered porosity shall be included in the porosity in any six inch length of weld which includes the cluster.

(e) Aligned porosity shall be acceptable providing the summation of the diameters of the pores is no more than T in a length $12T$, or 6 inches, whichever is less, providing each pore is separated by a distance at least six times the diameter of the largest adjacent pore. Aligned porosity indications shall be counted in the total area of permissible indications in any six inch length of weld.

(f) Permissible porosity indications for weld thicknesses intermediate to those illustrated may be evaluated either by comparison with the next thinner material or by calculation as shown in Table UA-65.

Permissible porosity for greater thicknesses shall not exceed $0.060T$ square inches in any 6-inch length of weld.

TABLE UA-65

MAXIMUM PERMISSIBLE POROSITY INDICATIONS IN RADIOGRAPHS PER 6 IN. LENGTH OF WELD

Weld Thickness (Inches)	Total Area of Permitted Porosity (Square Inches)	LARGE Pore Size (In.) Approx. Fraction	LARGE Pore Size (In.) Decimal Value (1)	LARGE Pore Size (In.) No.	MEDIUM Pore Size (In.) Approx. Fraction	MEDIUM Pore Size (In.) Decimal Value (1)	MEDIUM Pore Size (In.) No.	FINE Pore Size (In.) Approx. Fraction	FINE Pore Size (In.) Decimal Value (1)	FINE Pore Size (In.) No.
⅛	.0075	....	....	....	....	....	....	1/64	.014	49
¼	.015	....	....	....	3/128	.025	31	1/64	.0138	100
½	.030	3/32	.10	4	1/32	.031	40	3/128	.0195	101
¾	.045	⅛	.125	4	1/32	.034	50	3/128	.024	99
1	.060	⅛	.125	5	5/128	.039	50	1/32	.0275	101
1½	.090	⅛	.125	7	3/64	.048	50	1/32	.034	99
2	.120	⅛	.125	10	7/128	.055	51	5/128	.039	100
2½	.150	⅛	.125	12	1/16	.061	51	3/64	.044	99
3	.180	⅛	.125	15	1/16	.068	50	3/64	.048	99
3½	.210	⅛	.125	17	5/64	.073	50	7/128	.052	99
4	.240	⅛	.125	20	5/64	.078	50	7/128	.055	101

(1) These values used for calculating total area of permissible porosity given in second column.

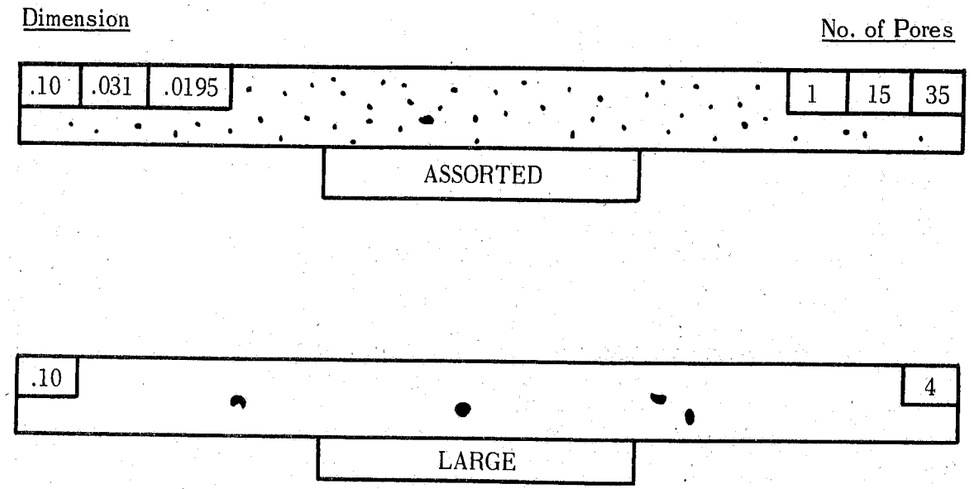

TYPICAL NUMBER AND SIZE PERMITTED
IN ANY SIX INCH LENGTH OF WELD
ONE HALF INCH WELD THICKNESS
TOTAL PORE AREA PERMITTED IS .030 SQ. IN.

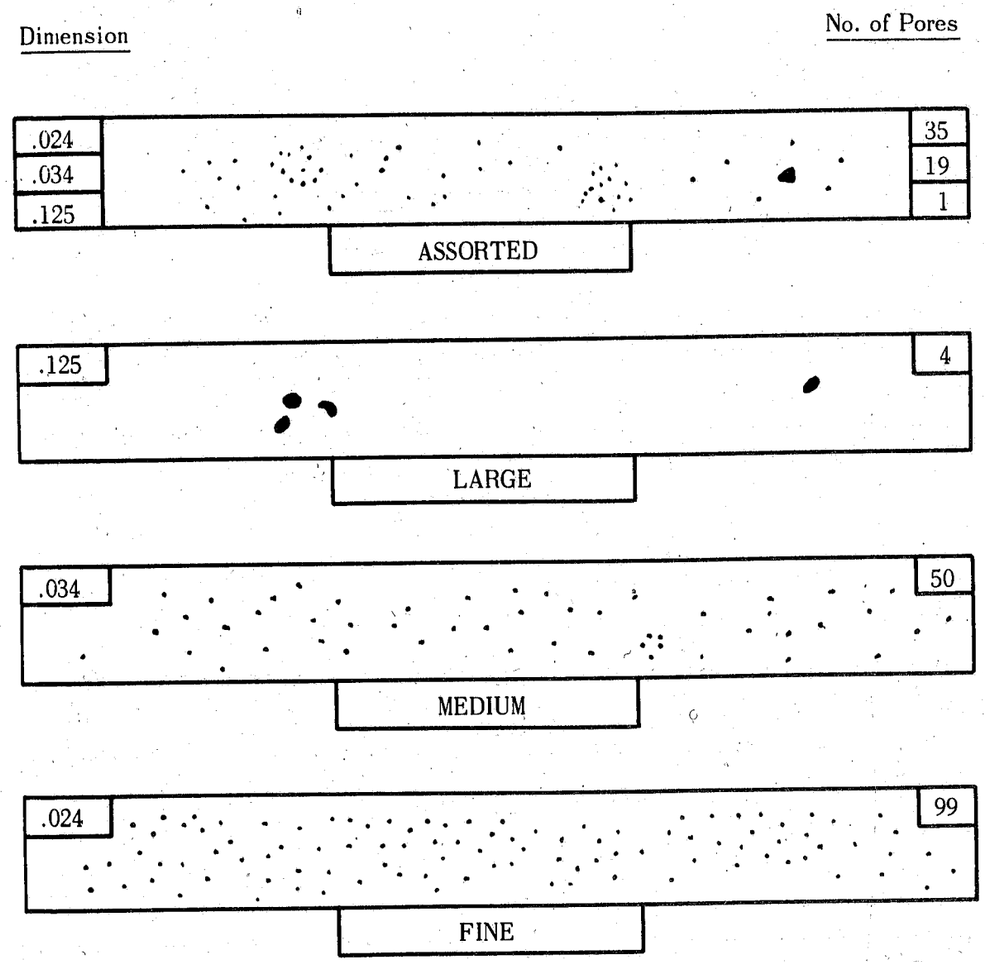

TYPICAL NUMBER AND SIZE PERMITTED
IN ANY SIX INCH LENGTH OF WELD
THREE QUARTER INCH WELD THICKNESS
TOTAL PORE AREA PERMITTED IS .045 SQ. IN.

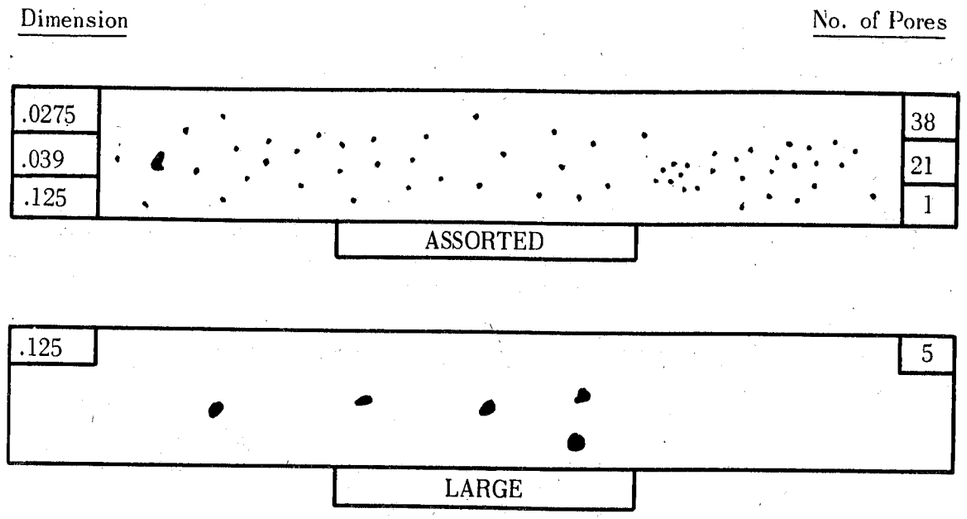

TYPICAL NUMBER AND SIZE PERMITTED
IN ANY SIX INCH LENGTH OF WELD
ONE INCH WELD THICKNESS
TOTAL PORE AREA PERMITTED IS .060 SQ. IN.

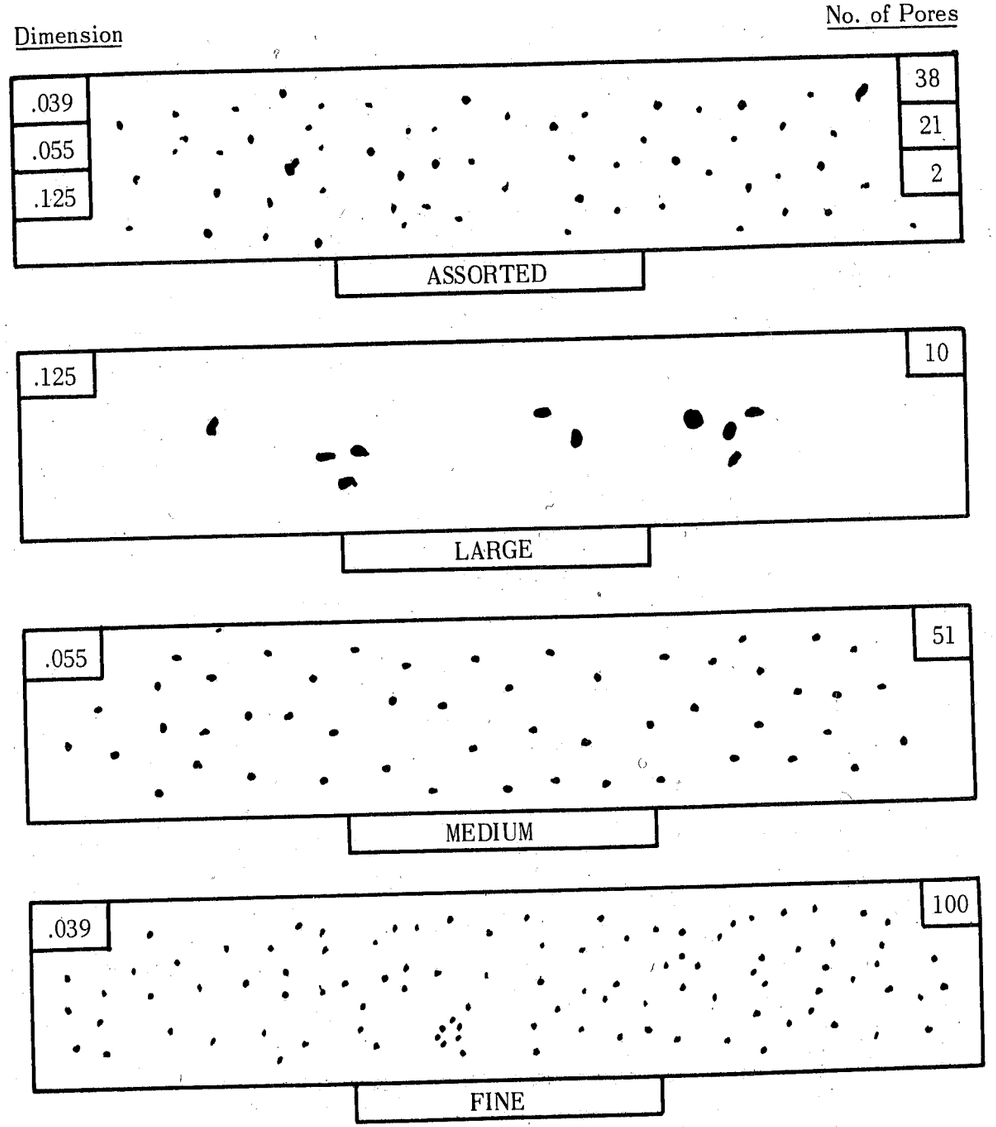

TYPICAL NUMBER AND SIZE PERMITTED
IN ANY SIX INCH LENGTH OF WELD
TWO INCH WELD THICKNESS
TOTAL PORE AREA PERMITTED IS .120 SQ. IN.

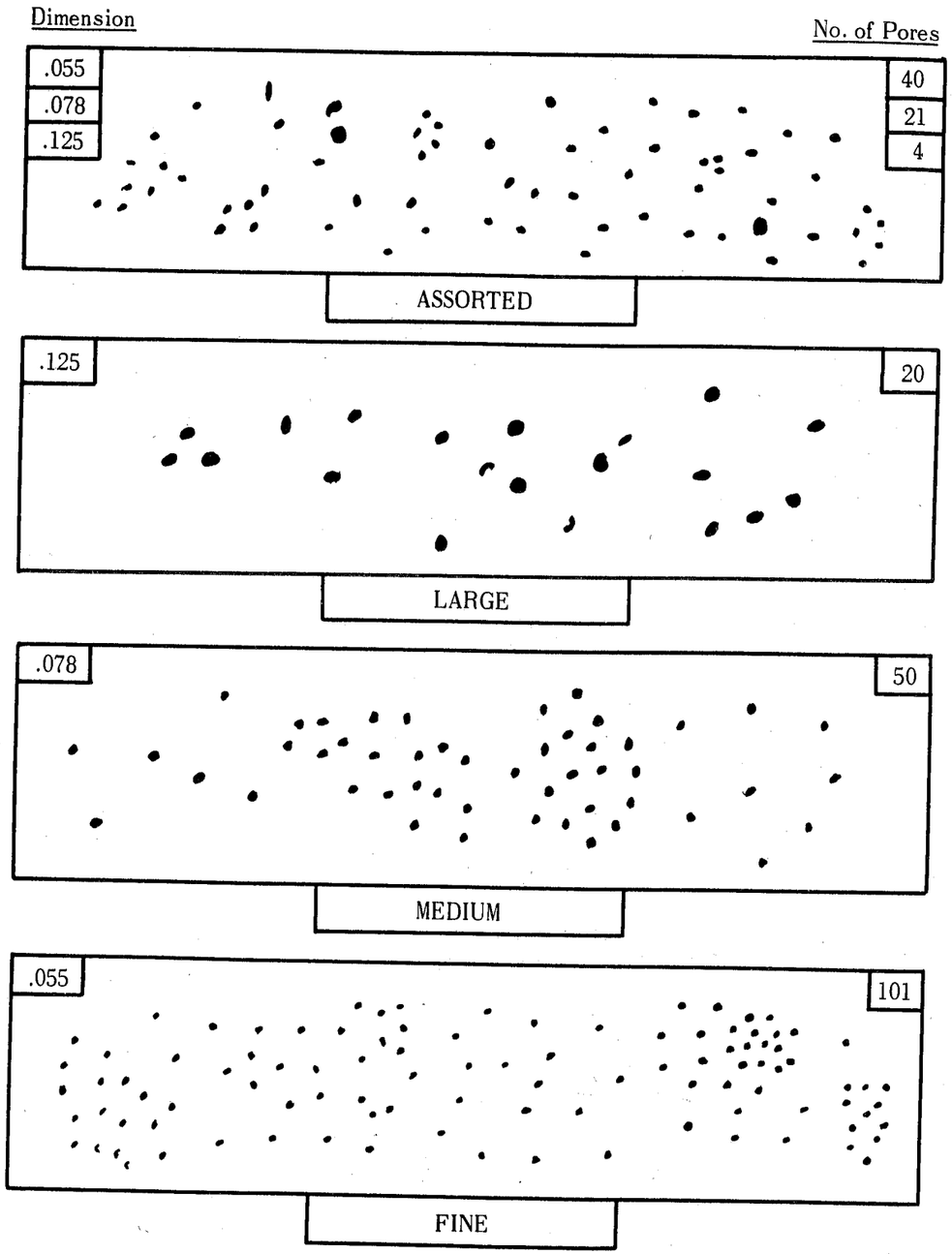

TYPICAL NUMBER AND SIZE PERMITTED
IN ANY SIX INCH LENGTH OF WELD
FOUR INCH WELD THICKNESS
TOTAL PORE AREA PERMITTED IS .240 SQ. IN.

APPENDIX V

Charts for Determining Shell Thickness of Cylindrical and Spherical Vessels Under External Pressure

Figure No. — Page No.

Carbon and Low-Alloy Steels

UCS-28.1–Specified Yield Strength 24000 to but not Including 30000 psi 222
UCS-28.2–Specified Yield Strength 30000 to 38000 psi Inclusive and Type 405 and Type 410 Stainless Steel 223
UHT-28.1–Quenched and Tempered Low Alloy Steel SA-517A, E and F 224

Nonferrous Materials

UNF-28.1–Low Carbon Nickel 225
UNF-28.2–Aluminum Alloy 3003 in O and H112 Temper 226
UNF-28.3–Aluminum Alloy 3003 in H14 Temper 227
UNF-28.4–Aluminum Alloy 3004 in O and H112 Temper 228
UNF-28.5–Aluminum Alloy 3004 in H34 Temper 229
UNF-28.6–Nickel 230
UNF-28.7–Annealed Nickel-Copper Alloy 231
UNF-28.8–Annealed Nickel-Chromium-Iron Alloy 232
UNF-28.9–Annealed Copper, Type DHP 233
UNF-28.10–Copper-Silicon Alloys A and C 234
UNF-28.11–Annealed 90-10 Copper-Nickel Alloy 235
UNF-28.12–Annealed 70-30 Copper-Nickel Alloy 236
UNF-28.13–Aluminum Alloy 5154 in O and H112 Temper and 5454 in O H32, H34 and H112 Temper 237
UNF-28.14–Aluminum Bronze SB-169 Alloy D 238
UNF-28.15–Nickel Molybdenum Alloy 239
UNF-28.16–Nickel-Chromium-Molybdenum Alloy 240
UNF-28.17–Aluminum Alloy 1060 in O Temper 241
UNF-28.18–Aluminum Alloy 5052 in O and H112 Temper 242
UNF-28.19–Aluminum Alloy 5086 in O and H112 Temper 243
UNF-28.20–Aluminum Alloy 5456 in O Temper 244
UNF-28.22–Unalloyed Titanium Grade 3 245
UNF-28.23–Aluminum Alloy 5083 in O or H113 Temper 246
UNF-28.25–Nickel-Iron-Chromium-Molybdenum-Copper Alloy 247
UNF-28.28–Unalloyed Titanium Grade 2 248

High-Alloy Steel

UHA-28.1–Austenitic Steel (18 Cr-8 Ni, Type 304) 249
UHA-28.2–Austenitic Steels (18 Cr-8 Ni Mo, Type 316; 18 Cr-8 Ni Ti, Type 321; 18 Cr-8 Ni Cb, Type 347; 25 Cr-12 Ni, Type 309 (Through 1100 F only); 25 Cr-20 Ni, Type 310) 250
UHA-28.3–Austenitic Steel (18 Cr-8 Ni-0.03 Maximum Carbon, Type 304L) 251
UHA-28.4–Austenitic Steel (18 Cr-8 Ni + Mo-0.03 Maximum Barbon, Types 316L & 317L) 252
UCS-28.2–Type 405 and Type 410 Stainless Steel 223

Cast Iron

UCI-28–Cast Iron 253
UCN-28–Cast Nodular Iron 254

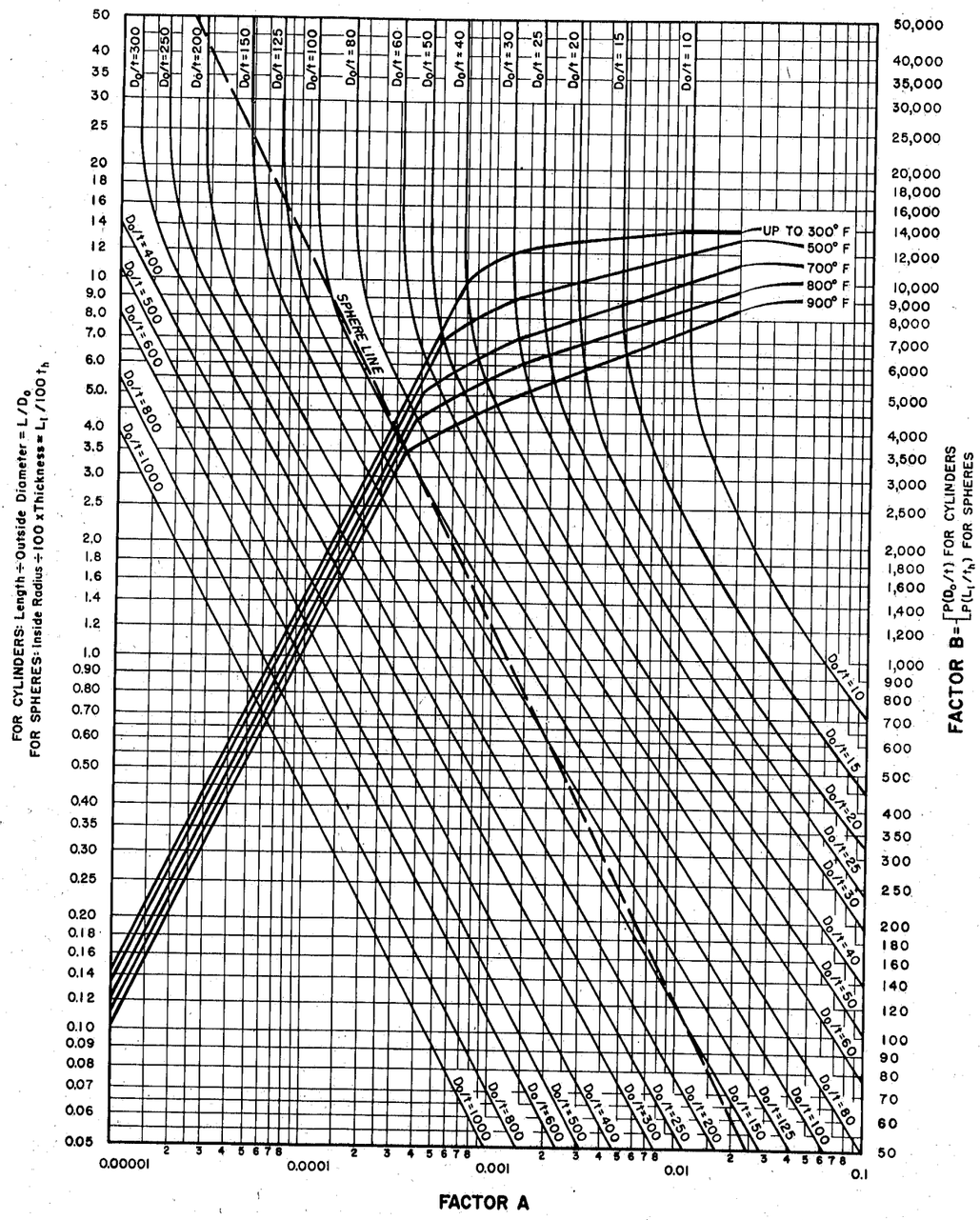

FIG. UCS-28.1 CHART FOR DETERMINING SHELL THICKNESS OF CYLINDRICAL AND SPHERICAL VESSELS UNDER EXTERNAL PRESSURE WHEN CONSTRUCTED OF CARBON STEEL
(Specified Yield Strength 24,000 psi to, but not including, 30,000 psi)

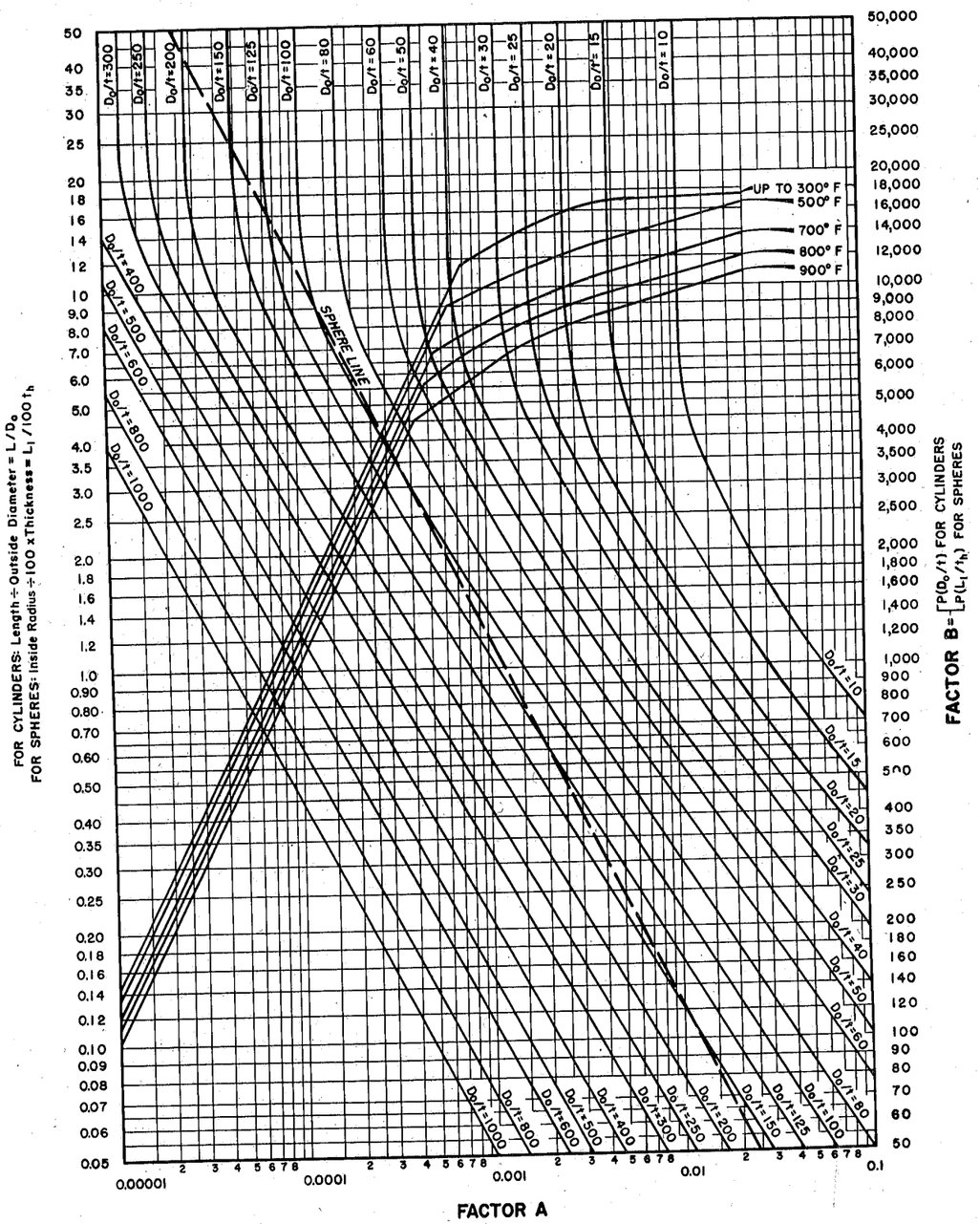

FIG. UCS-28.2 CHART FOR DETERMINING SHELL THICKNESS OF CYLINDRICAL AND SPHERICAL VESSELS UNDER EXTERNAL PRESSURE WHEN CONSTRUCTED OF CARBON STEEL
(Specified Yield Strength 30,000 to 38,000 psi inclusive) AND TYPE 405 AND TYPE 410 STAINLESS STEEL

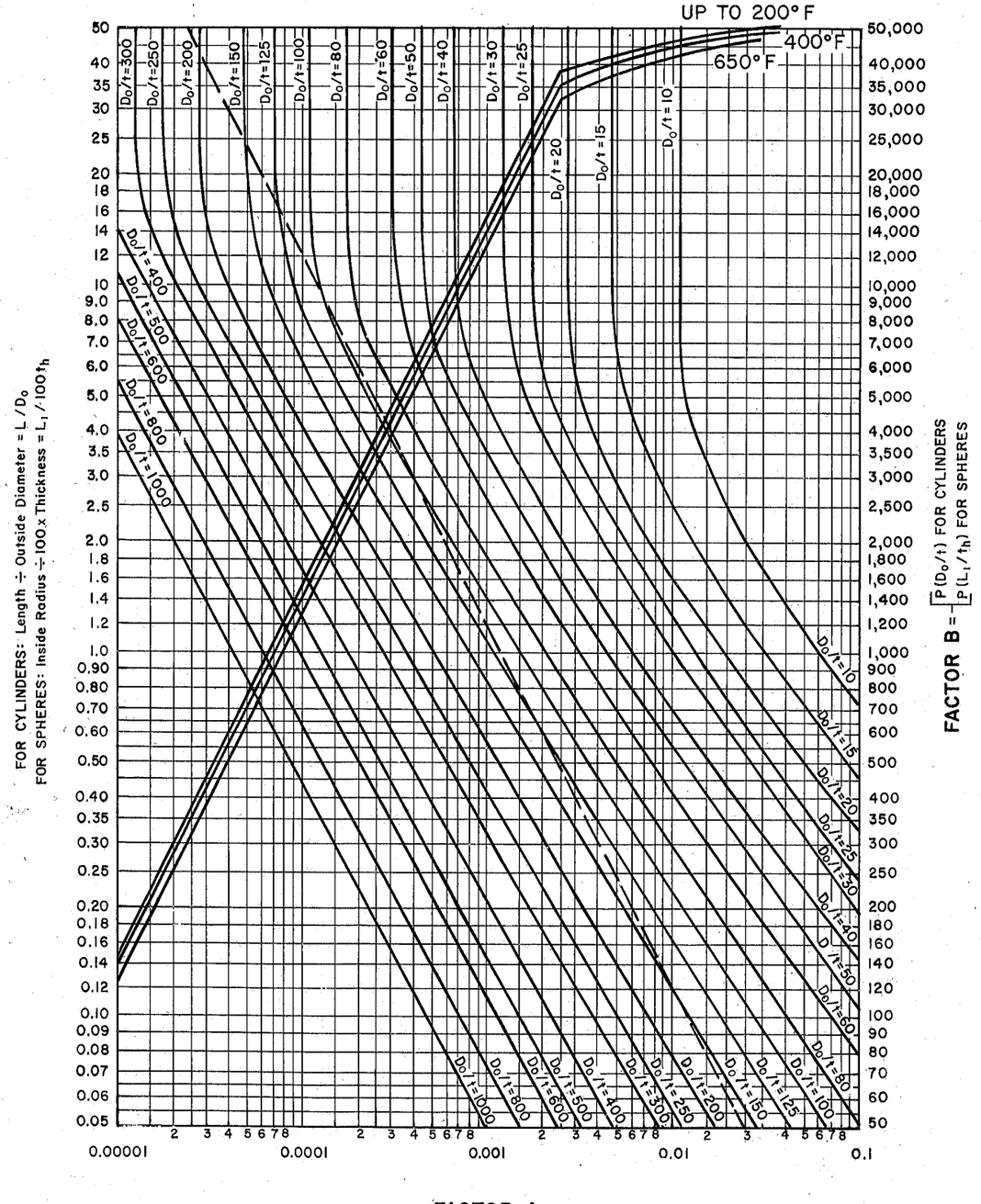

FIG. UHT-28.1 CHART FOR DETERMINING SHELL THICKNESS OF CYLINDRICAL AND SPHERICAL VESSELS UNDER EXTERNAL PRESSURE WHEN CONSTRUCTED OF QUENCHED AND TEMPERED LOW ALLOY STEEL SA-517A, E, AND F

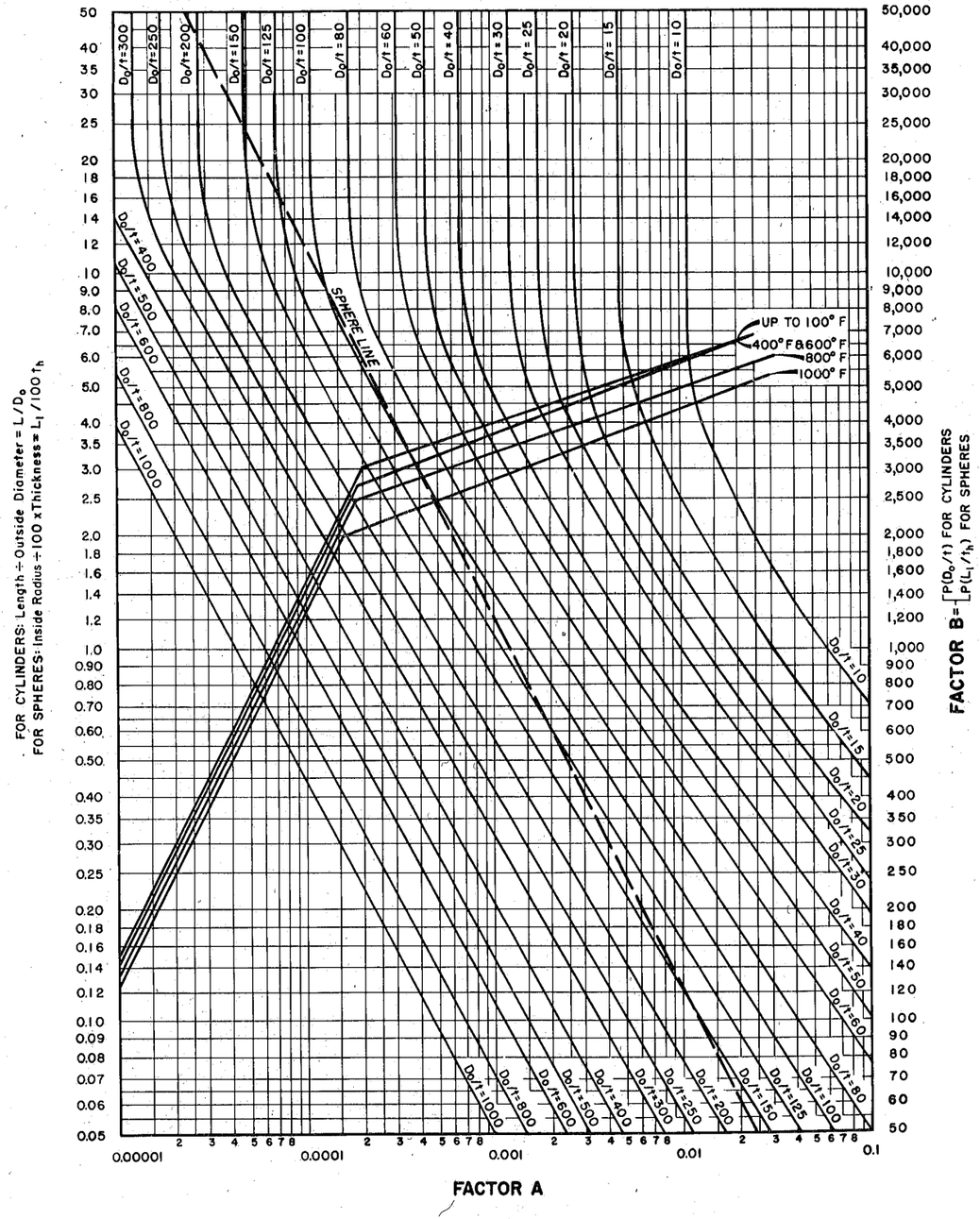

FIG. UNF-28.1 CHART FOR DETERMINING SHELL THICKNESS OF CYLINDRICAL AND SPHERICAL VESSELS UNDER EXTERNAL PRESSURE WHEN CONSTRUCTED OF LOW-CARBON NICKEL

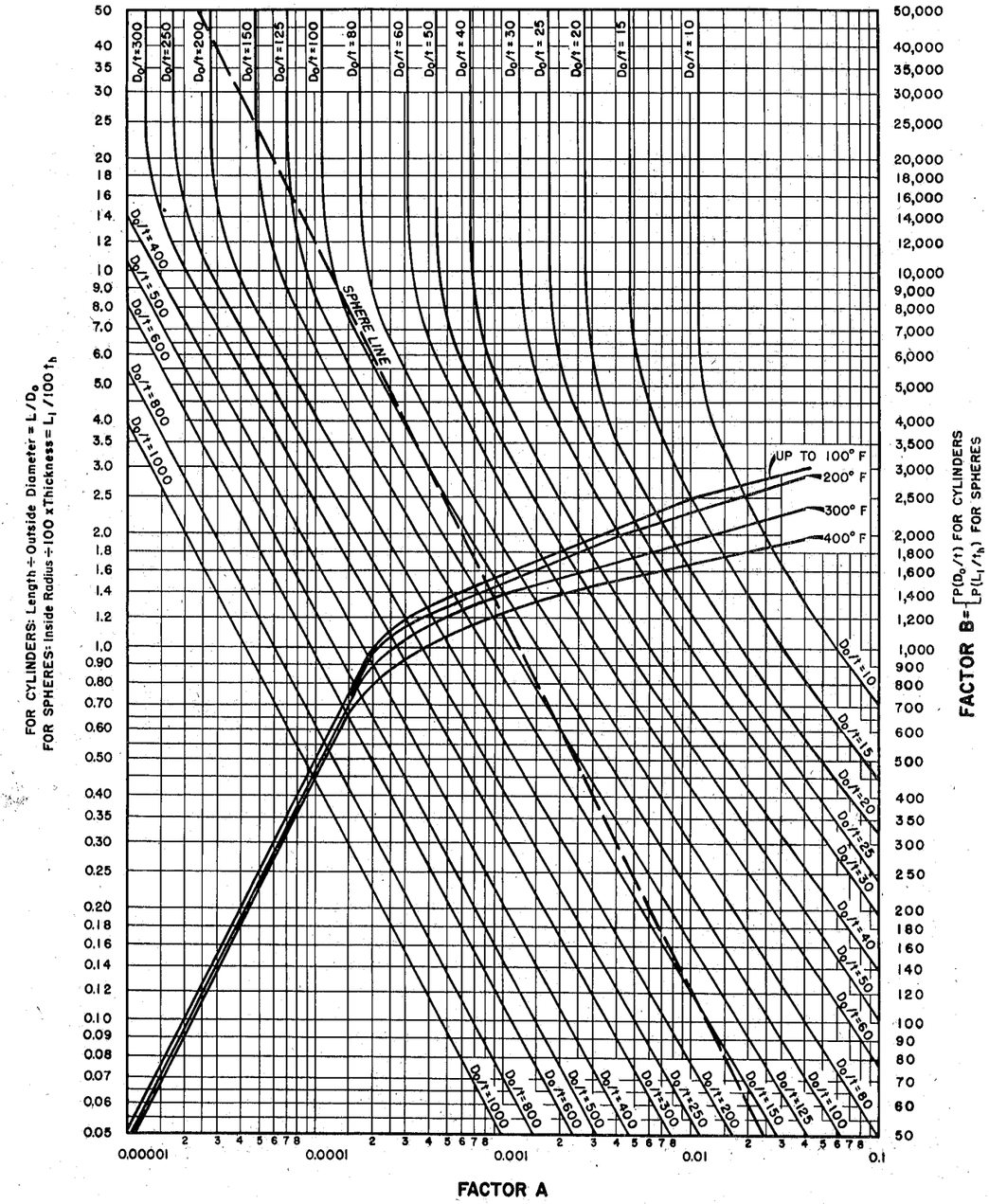

FIG. UNF-28.2 CHART FOR DETERMINING SHELL THICKNESS OF CYLINDRICAL AND SPHERICAL VESSELS UNDER EXTERNAL PRESSURE WHEN CONSTRUCTED OF ALUMINUM ALLOY 3003 IN O AND H 112 TEMPER

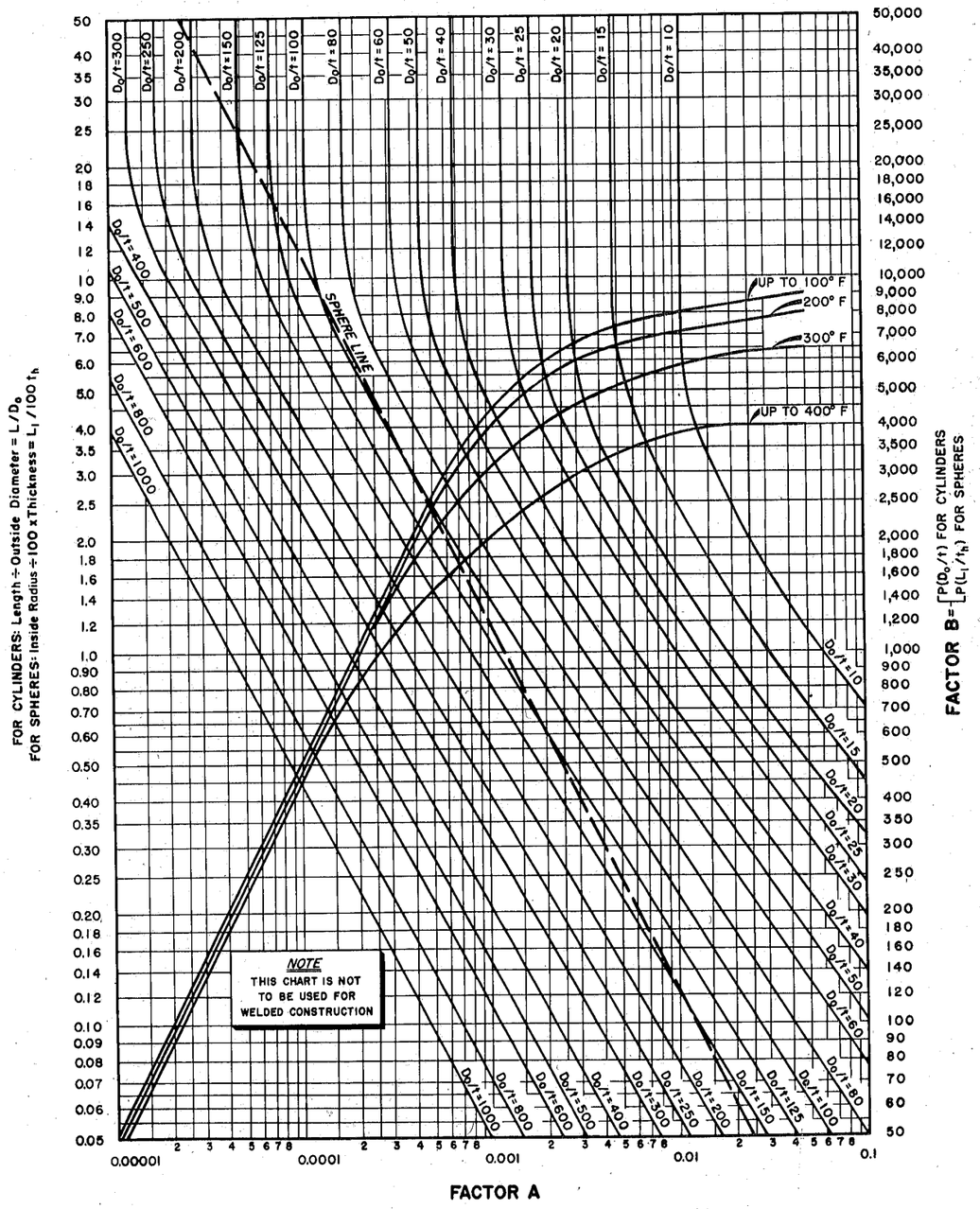

FIG. UNF-28.3 CHART FOR DETERMINING SHELL THICKNESS OF CYLINDRICAL AND SPHERICAL VESSELS UNDER EXTERNAL PRESSURE WHEN CONSTRUCTED OF ALUMINUM ALLOY 3003 IN H14 TEMPER

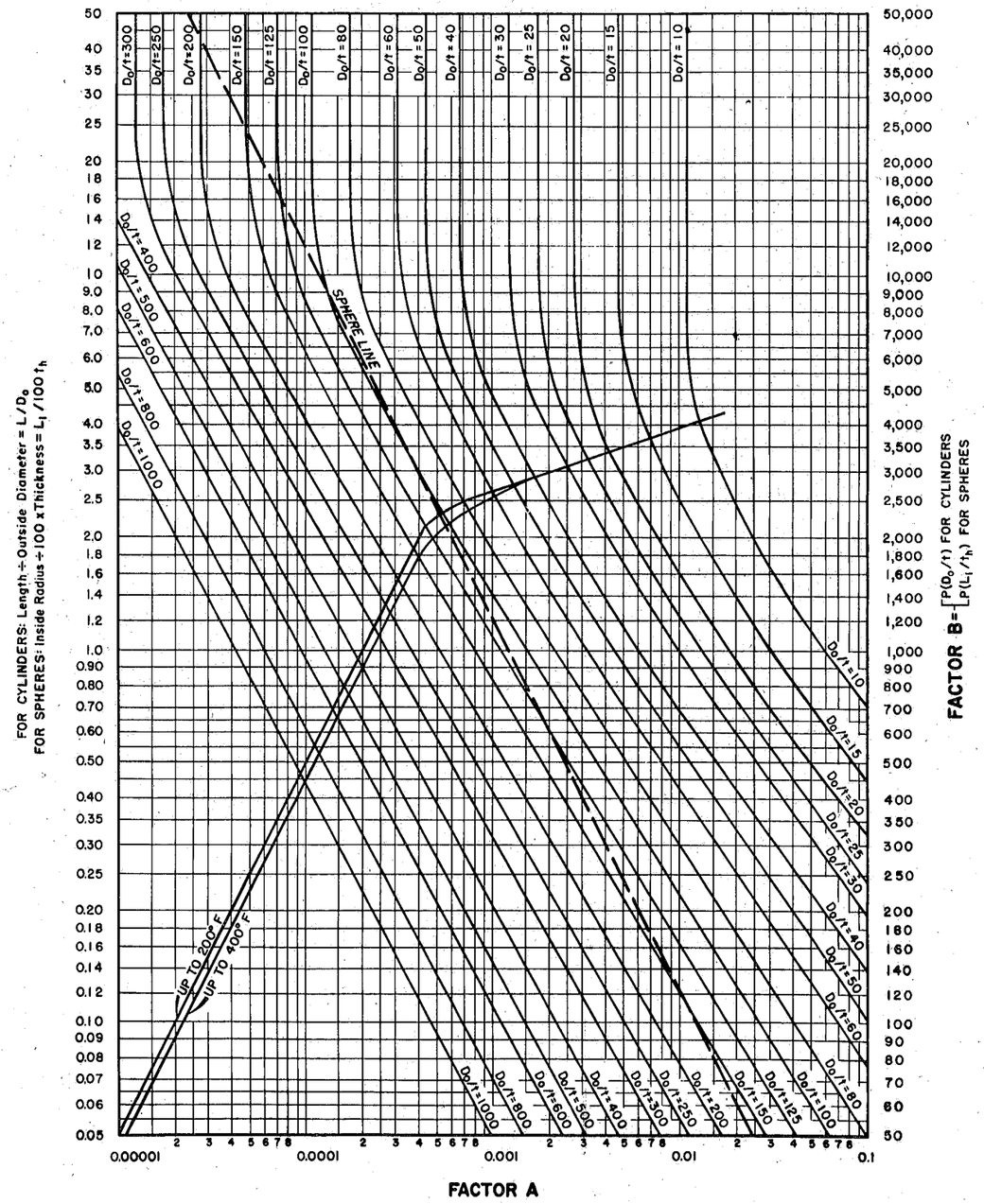

FIG. UNF-28.4 CHART FOR DETERMINING SHELL THICKNESS OF CYLINDRICAL AND SPHERICAL VESSELS UNDER EXTERNAL PRESSURE WHEN CONSTRUCTED OF ALUMINUM ALLOY 3004 IN O AND H112 TEMPER

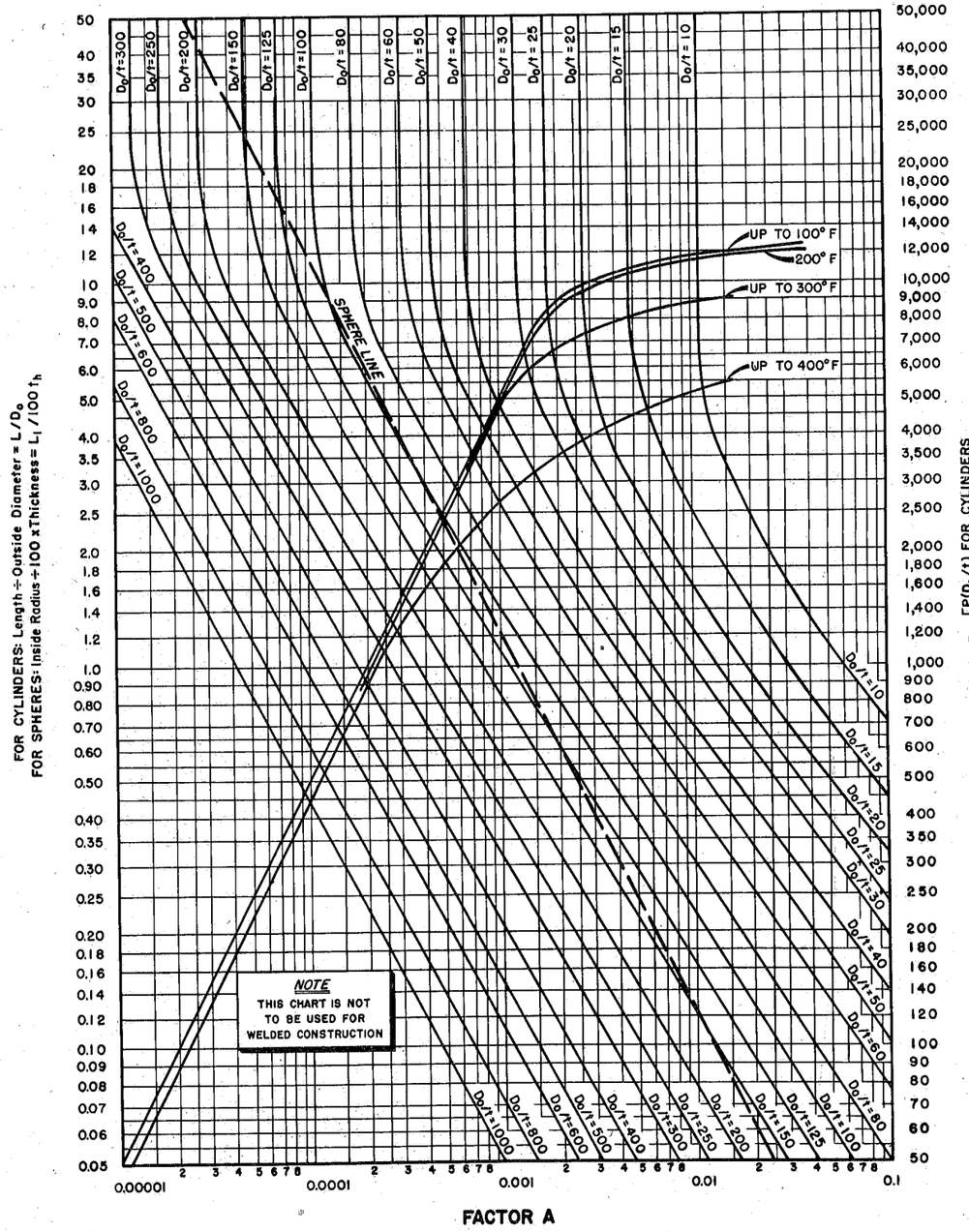

FIG. UNF-28.5 CHART FOR DETERMINING SHELL THICKNESS OF CYLINDRICAL AND SPHERICAL VESSELS UNDER EXTERNAL PRESSURE WHEN CONSTRUCTED OF ALUMINUM ALLOY 3004 IN H34 TEMPER

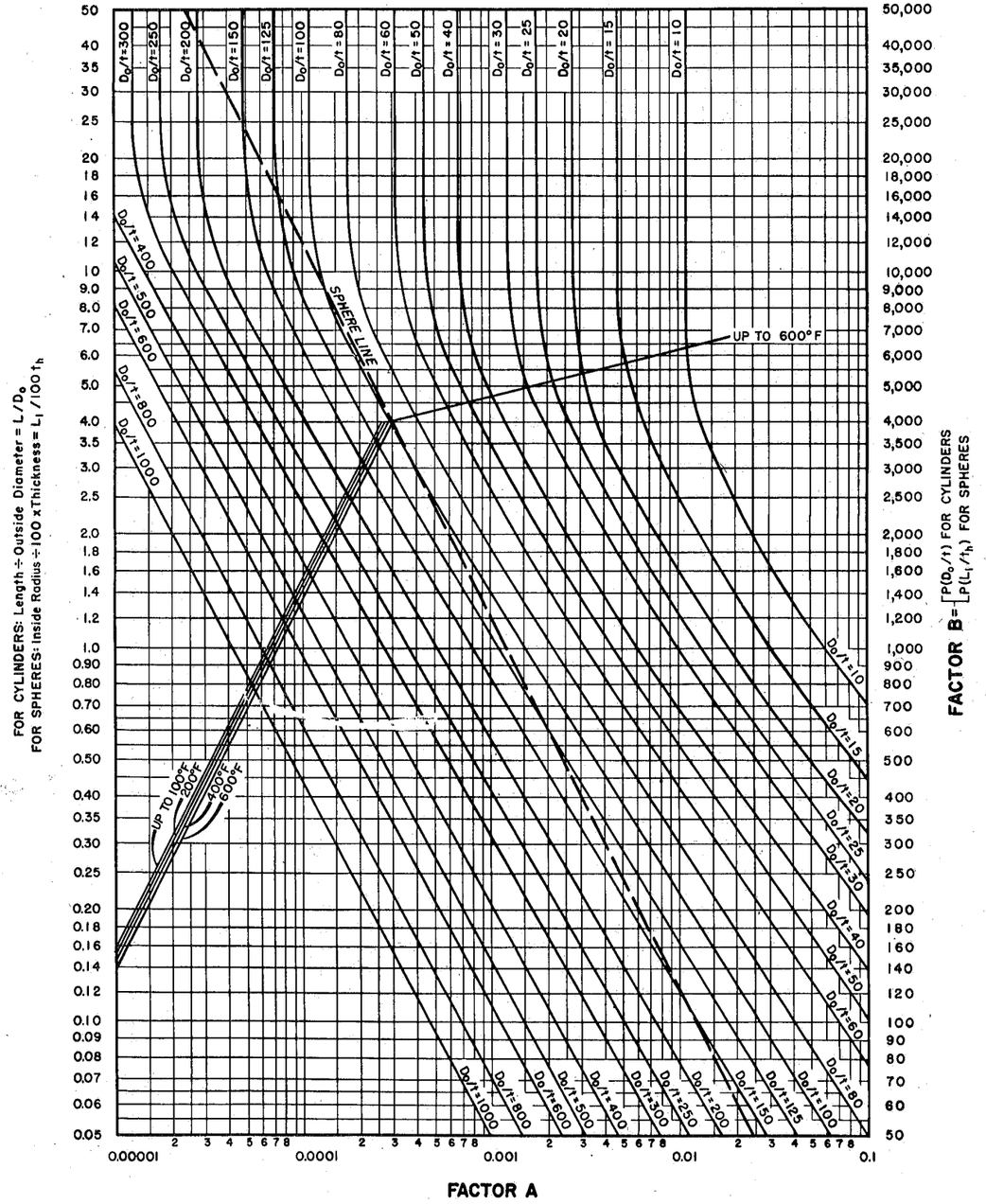

FIG. UNF-28.6 CHART FOR DETERMINING SHELL THICKNESS OF CYLINDRICAL AND SPHERICAL VESSELS UNDER EXTERNAL PRESSURE WHEN CONSTRUCTED OF NICKEL

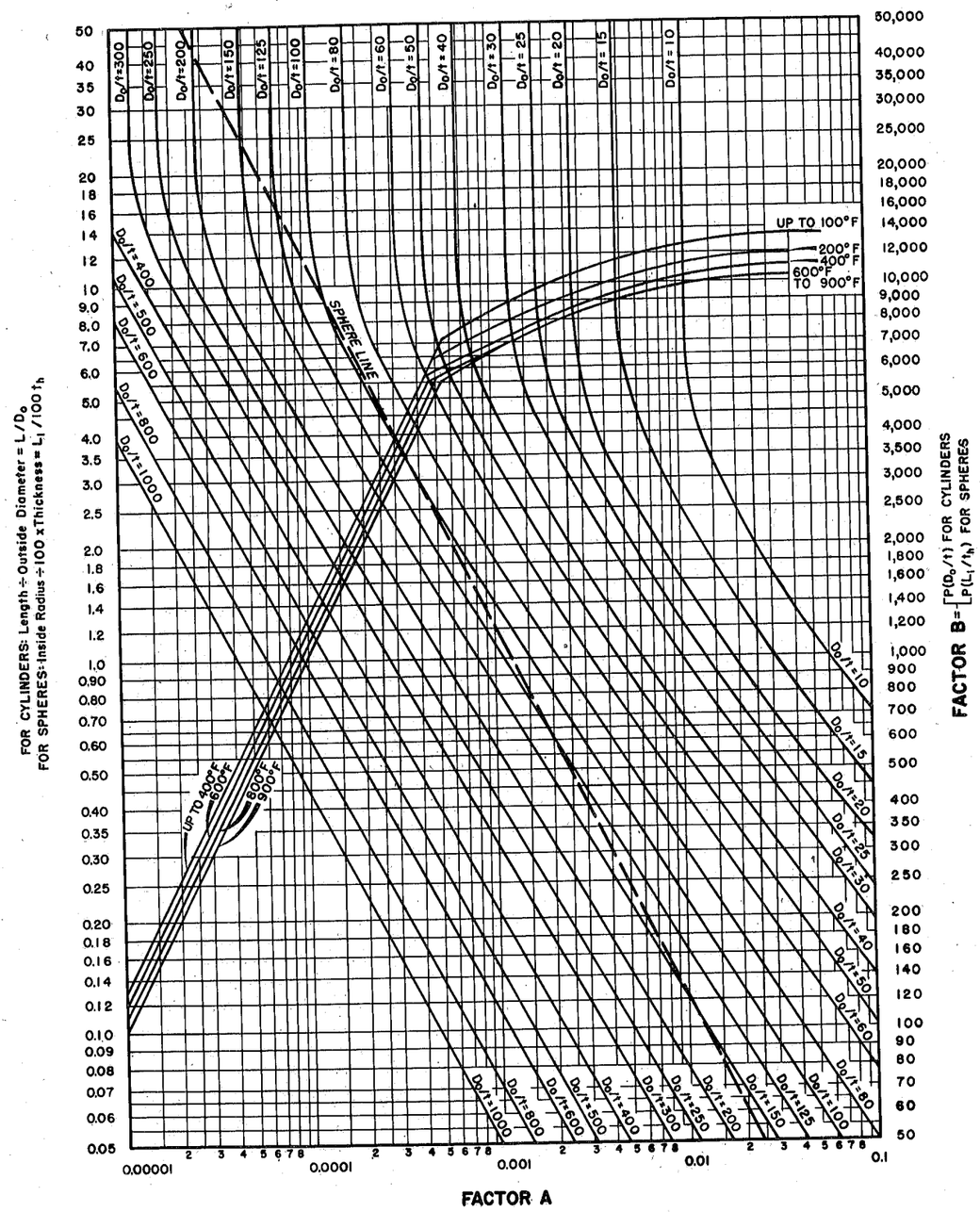

FIG. UNF-28.7 CHART FOR DETERMINING SHELL THICKNESS OF CYLINDRICAL AND SPHERICAL VESSELS UNDER EXTERNAL PRESSURE WHEN CONSTRUCTED OF ANNEALED NICKEL-COPPER ALLOY

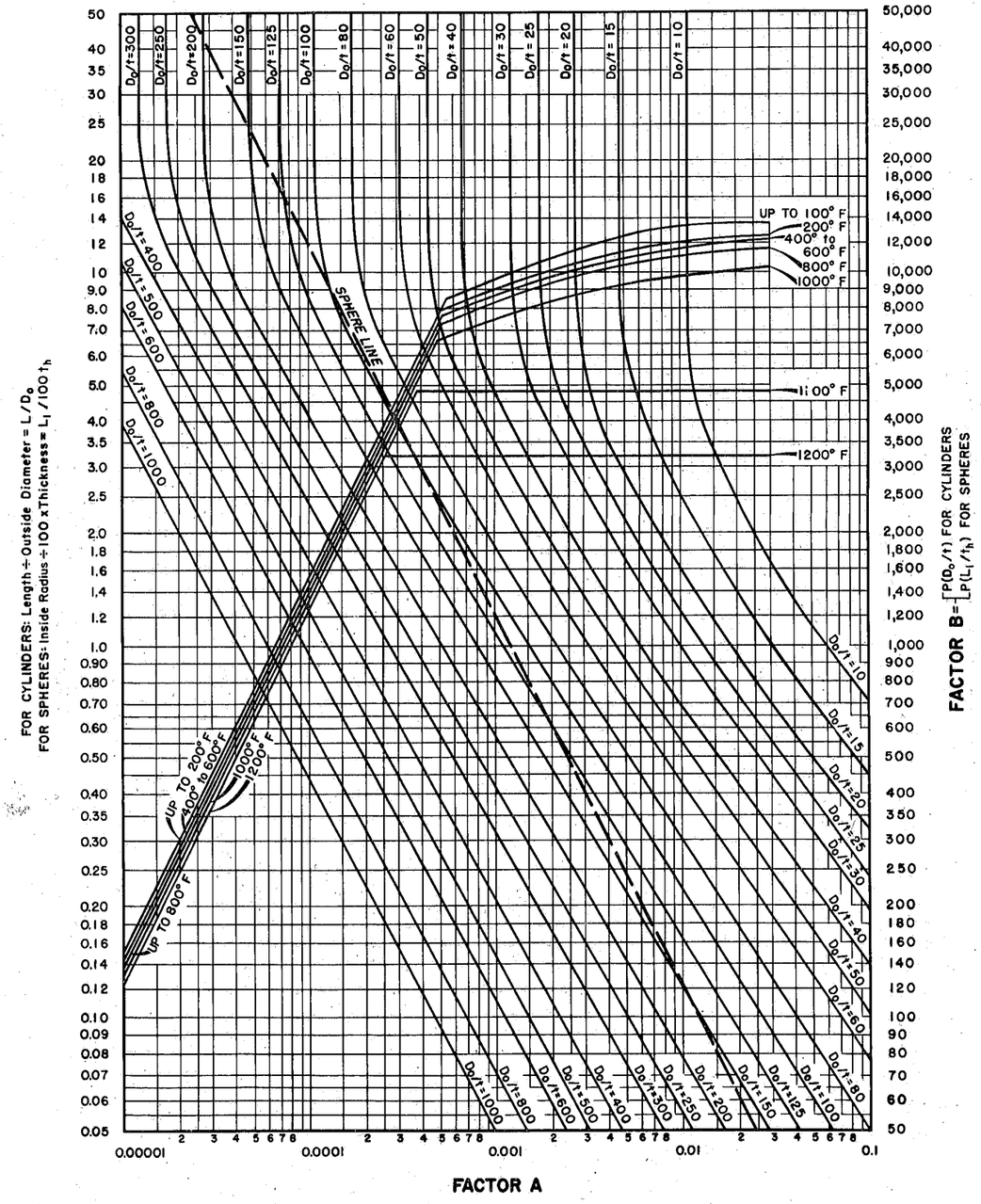

FIG. UNF-28.8 CHART FOR DETERMINING SHELL THICKNESS OF CYLINDRICAL AND SPHERICAL VESSELS UNDER EXTERNAL PRESSURE WHEN CONSTRUCTED OF ANNEALED NICKEL-CHROMIUM-IRON ALLOY

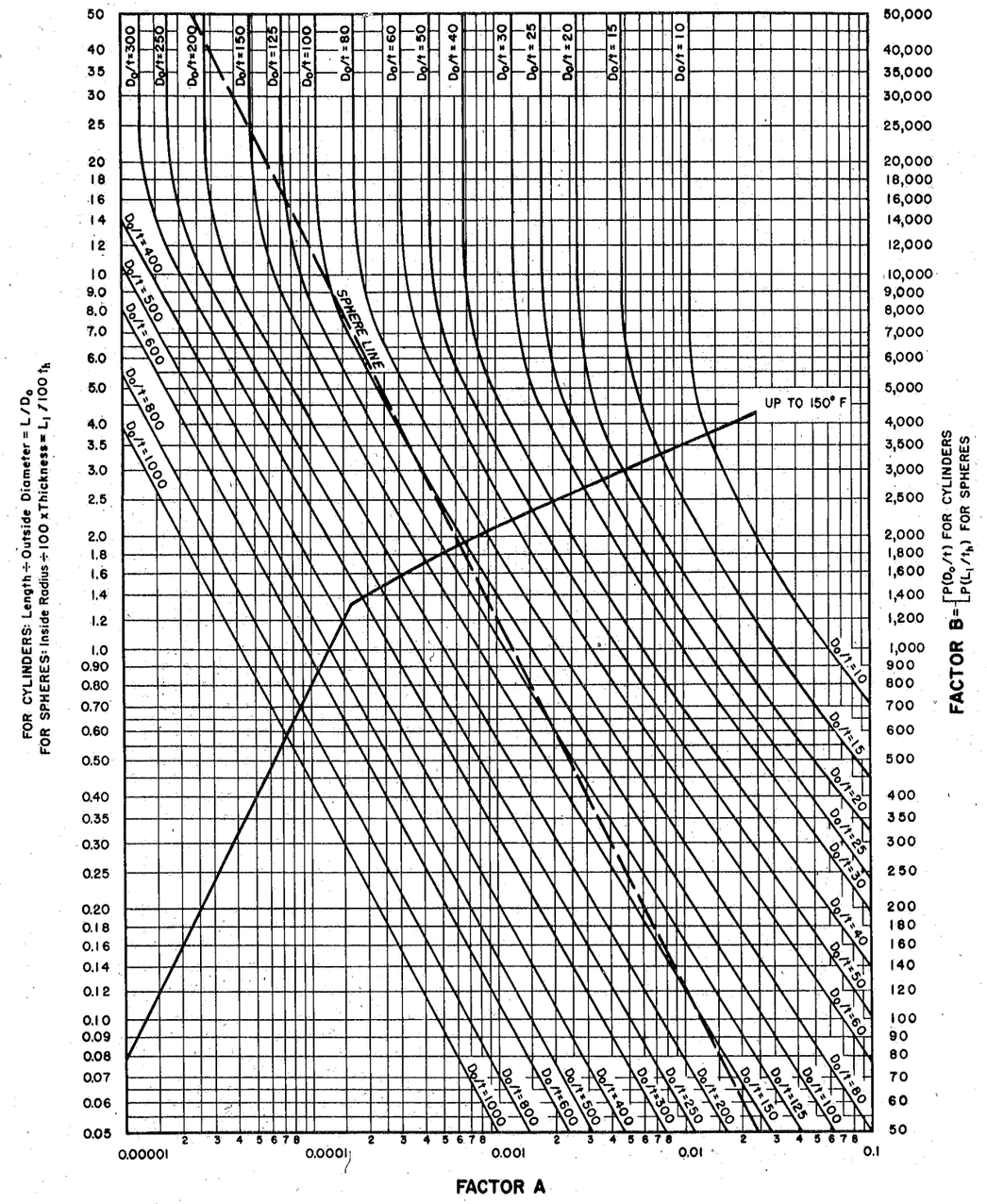

FIG. UNF-28.9 CHART FOR DETERMINING SHELL THICKNESS OF CYLINDRICAL AND SPHERICAL VESSELS UNDER EXTERNAL PRESSURE WHEN CONSTRUCTED OF ANNEALED COPPER, TYPE DHP

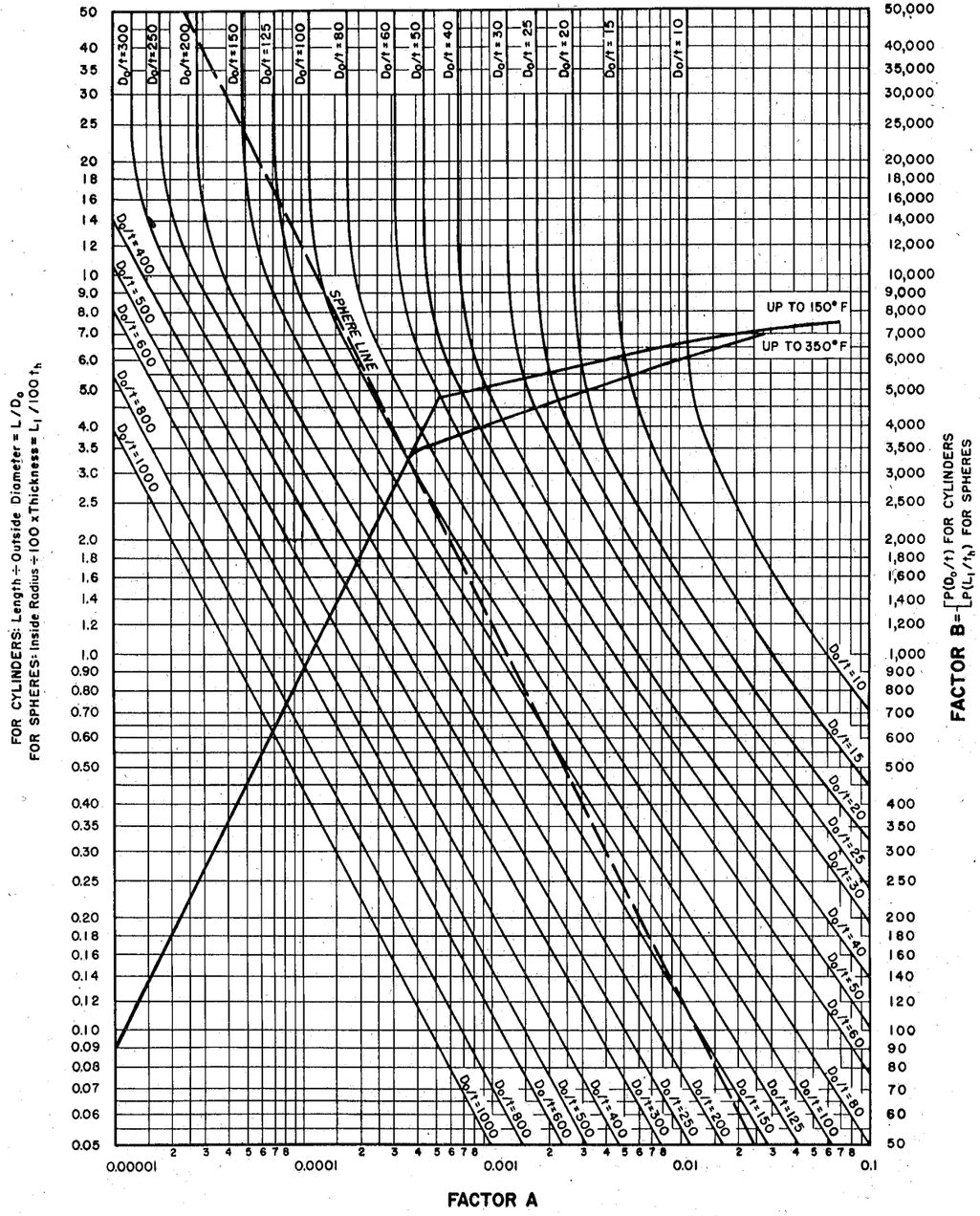

FIG. UNF-28.10 CHART FOR DETERMINING SHELL THICKNESS OF CYLINDRICAL AND SPHERICAL VESSELS UNDER EXTERNAL PRESSURE WHEN CONSTRUCTED OF COPPER-SILICON ALLOYS A AND C

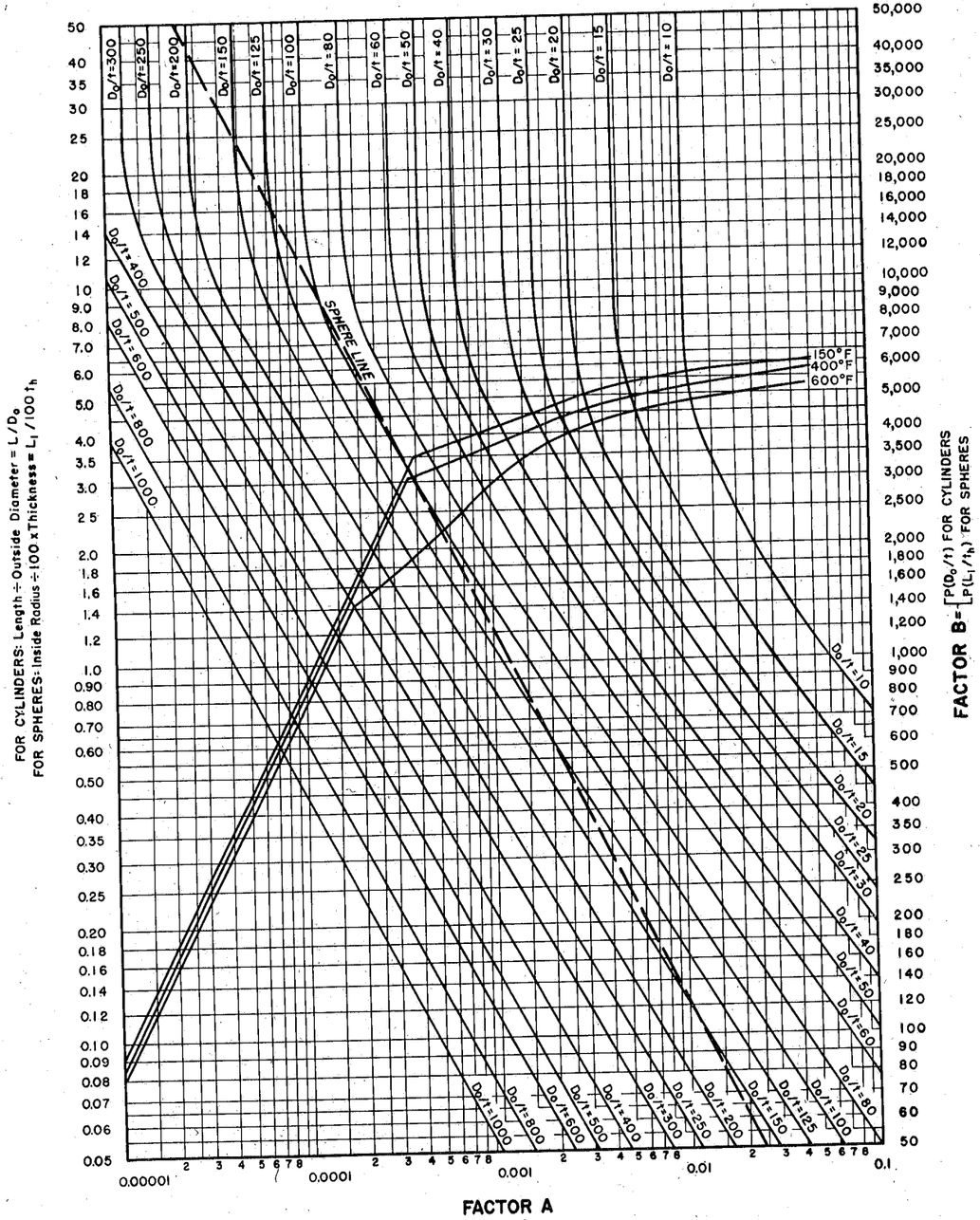

FIG. UNF-28.11 CHART FOR DETERMINING SHELL THICKNESS OF CYLINDRICAL AND SPHERICAL VESSELS UNDER EXTERNAL PRESSURE WHEN CONSTRUCTED OF ANNEALED 90–10 COPPER-NICKEL ALLOY

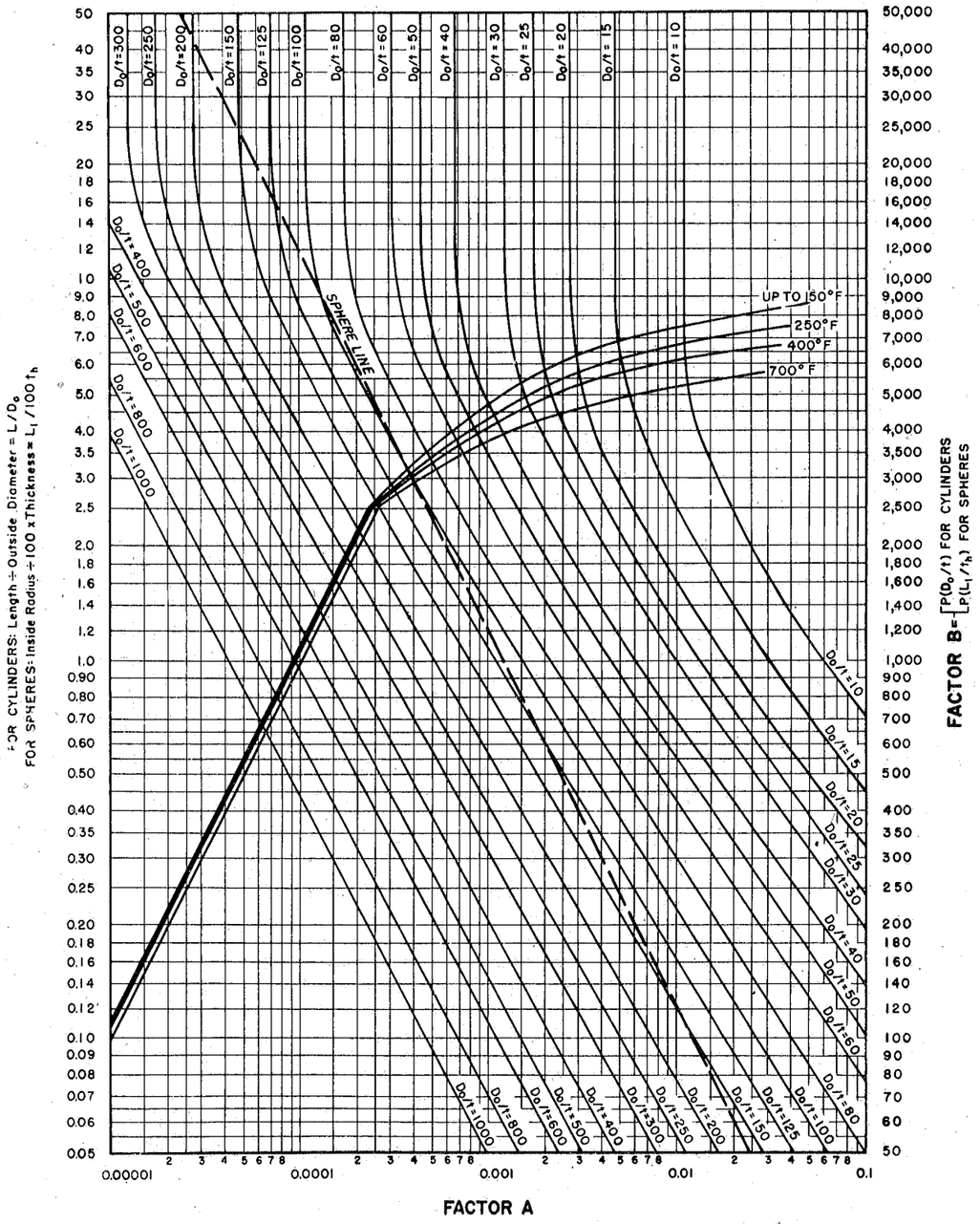

FIG. UNF-28.12 CHART FOR DETERMINING SHELL THICKNESS OF CYLINDRICAL AND SPHERICAL VESSELS UNDER EXTERNAL PRESSURE WHEN CONSTRUCTED OF ANNEALED 70–30 COPPER-NICKEL ALLOY

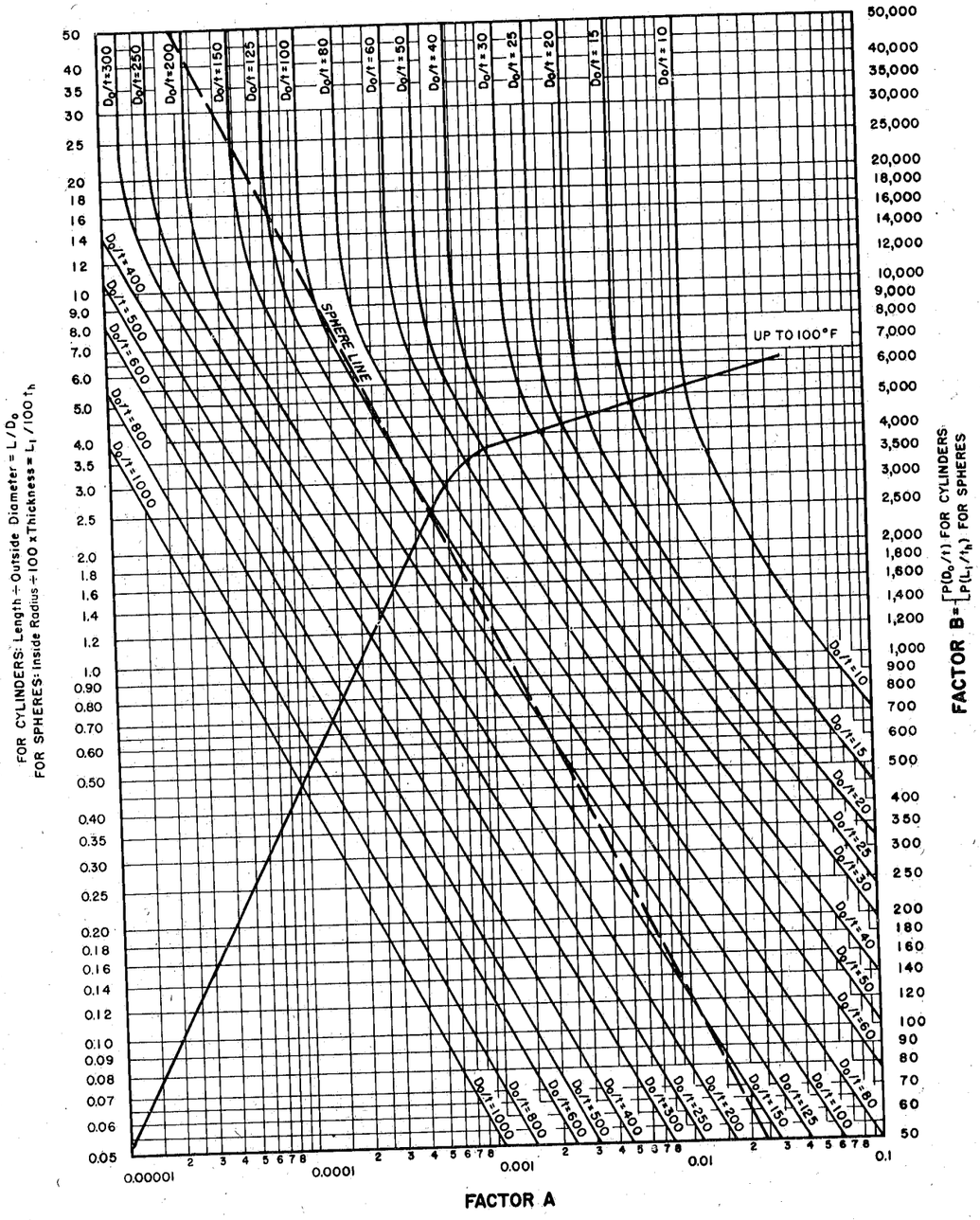

FIG. UNF-28.13 CHART FOR DETERMINING SHELL THICKNESS OF CYLINDRICAL AND SPHERICAL VESSELS UNDER EXTERNAL PRESSURE WHEN CONSTRUCTED OF ALUMINUM ALLOY 5154 IN O AND H112 TEMPER AND 5454 IN O, H32, H34, AND H112 TEMPER

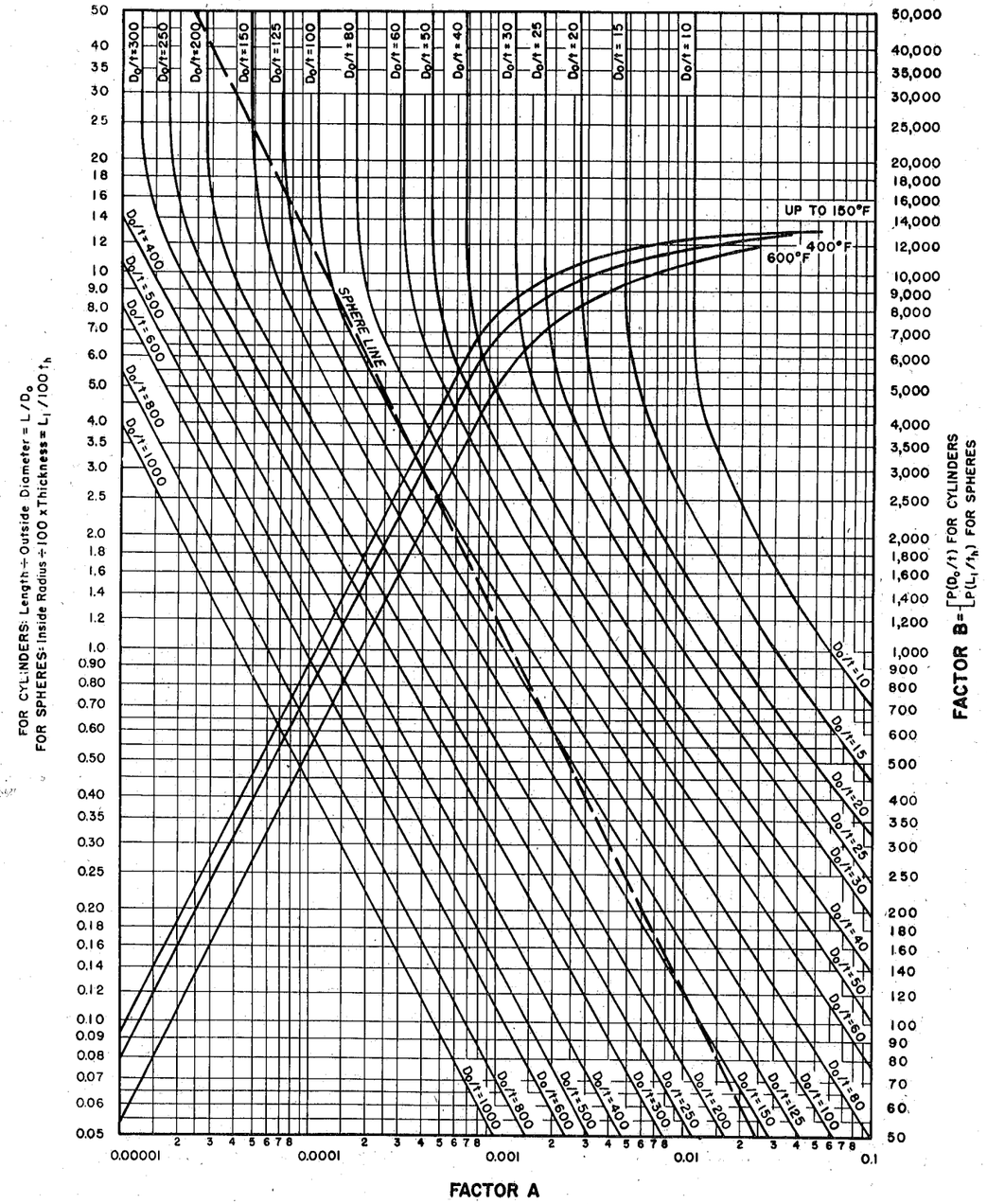

FIG. UNF-28.14 CHART FOR DETERMINING SHELL THICKNESS OF CYLINDRICAL AND SPHERICAL VESSELS UNDER EXTERNAL PRESSURE WHEN CONSTRUCTED OF ALUMINUM BRONZE SB-169 ALLOY D

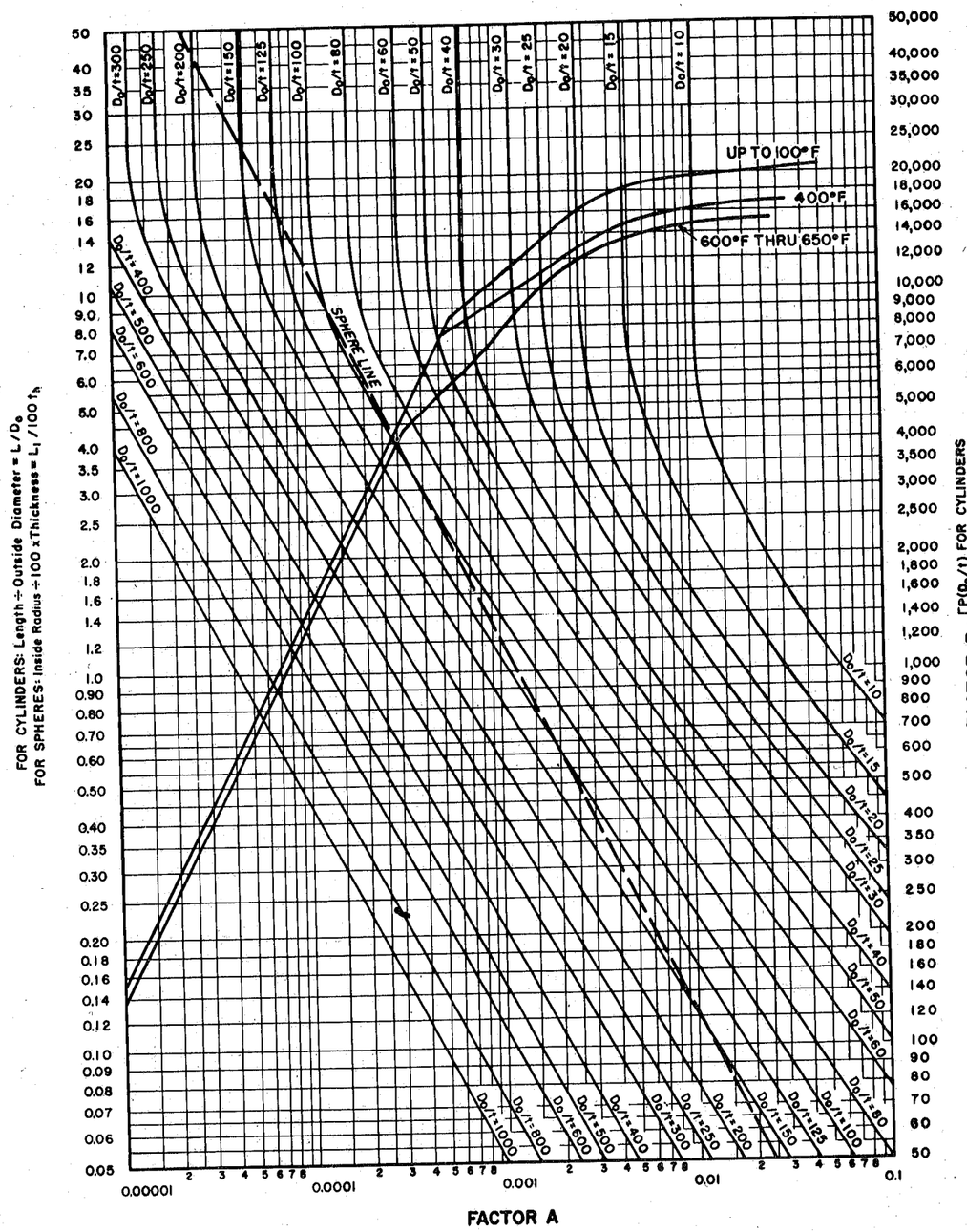

FIG. UNF-28.15 CHART FOR DETERMINING SHELL THICKNESS OF CYLINDRICAL AND SPHERICAL VESSELS UNDER EXTERNAL PRESSURE WHEN CONSTRUCTED OF NICKEL-MOLYBDENUM ALLOY

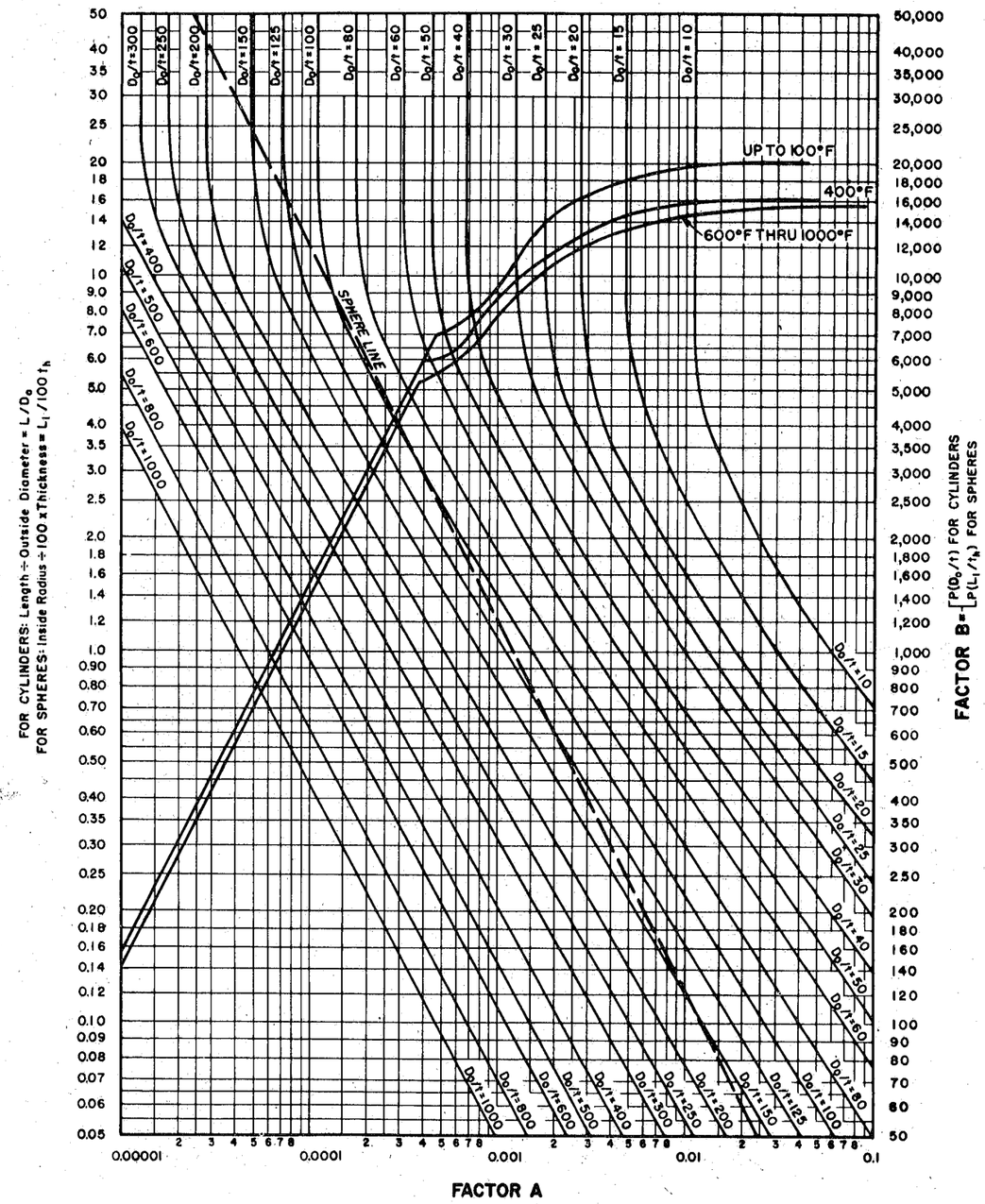

FIG. UNF-28.16 CHART FOR DETERMINING SHELL THICKNESS OF CYLINDRICAL AND SPHERICAL VESSELS UNDER EXTERNAL PRESSURE WHEN CONSTRUCTED OF NICKEL-CHROMIUM-MOLYBDENUM ALLOY

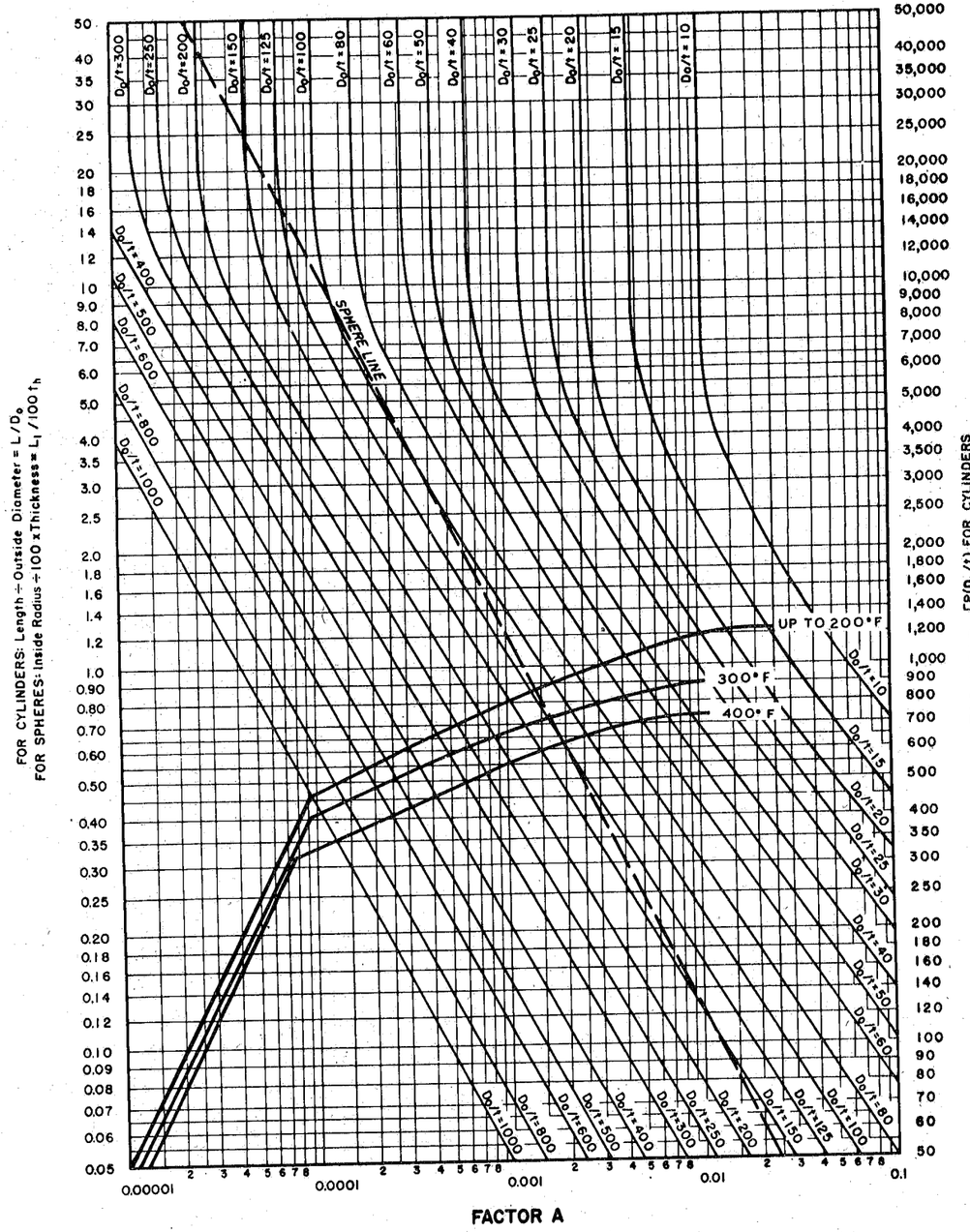

FIG. UNF-28.17 CHART FOR DETERMINING SHELL THICKNESS OF CYLINDRICAL AND SPHERICAL VESSELS UNDER EXTERNAL PRESSURE WHEN CONSTRUCTED OF ALUMINUM ALLOY 1060 IN 0 TEMPER

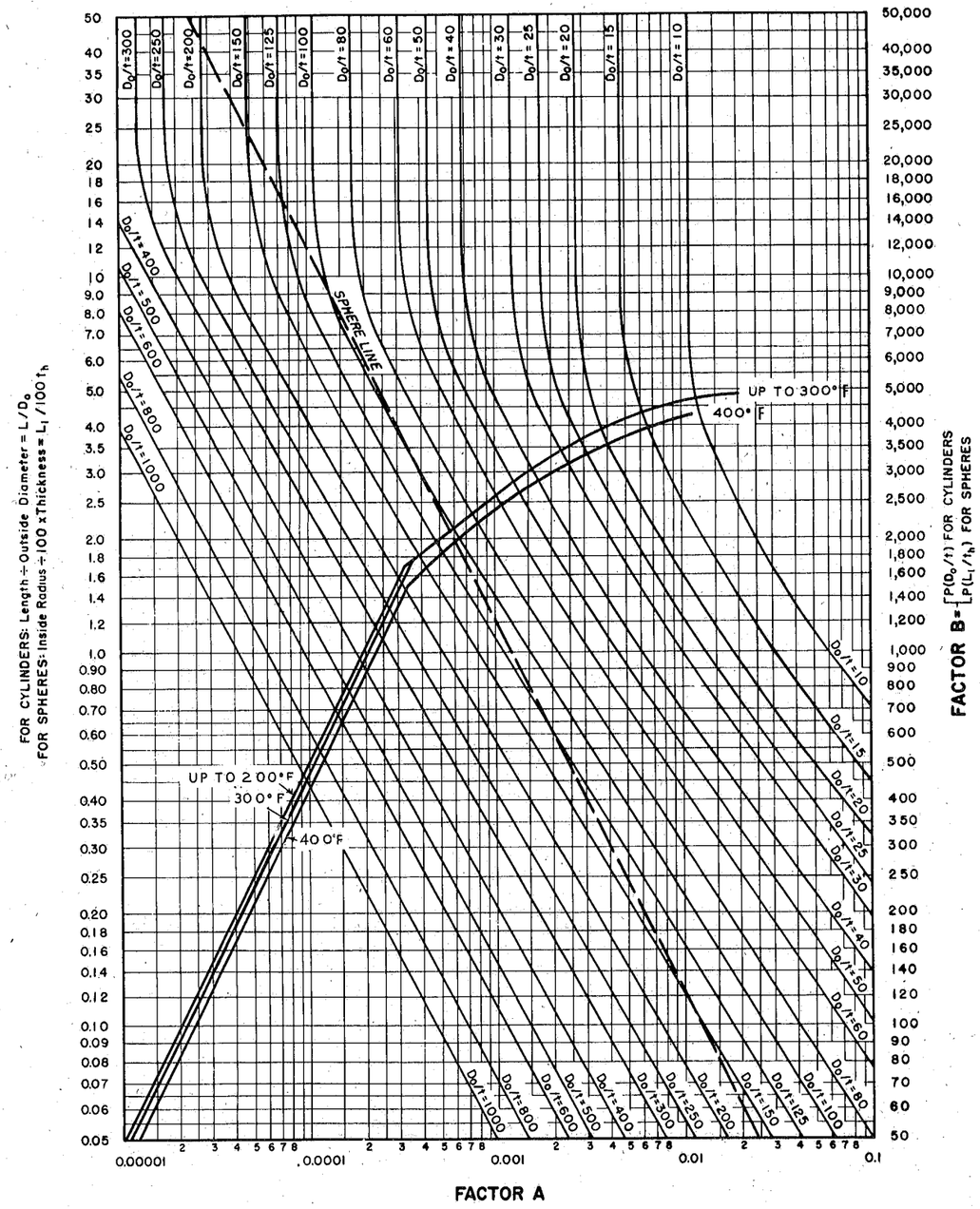

FIG. UNF-28.18 CHART FOR DETERMINING SHELL THICKNESS OF CYLINDRICAL AND SPHERICAL VESSELS UNDER EXTERNAL PRESSURE WHEN CONSTRUCTED OF ALUMINUM ALLOY 5052 IN 0 AND H112 TEMPER

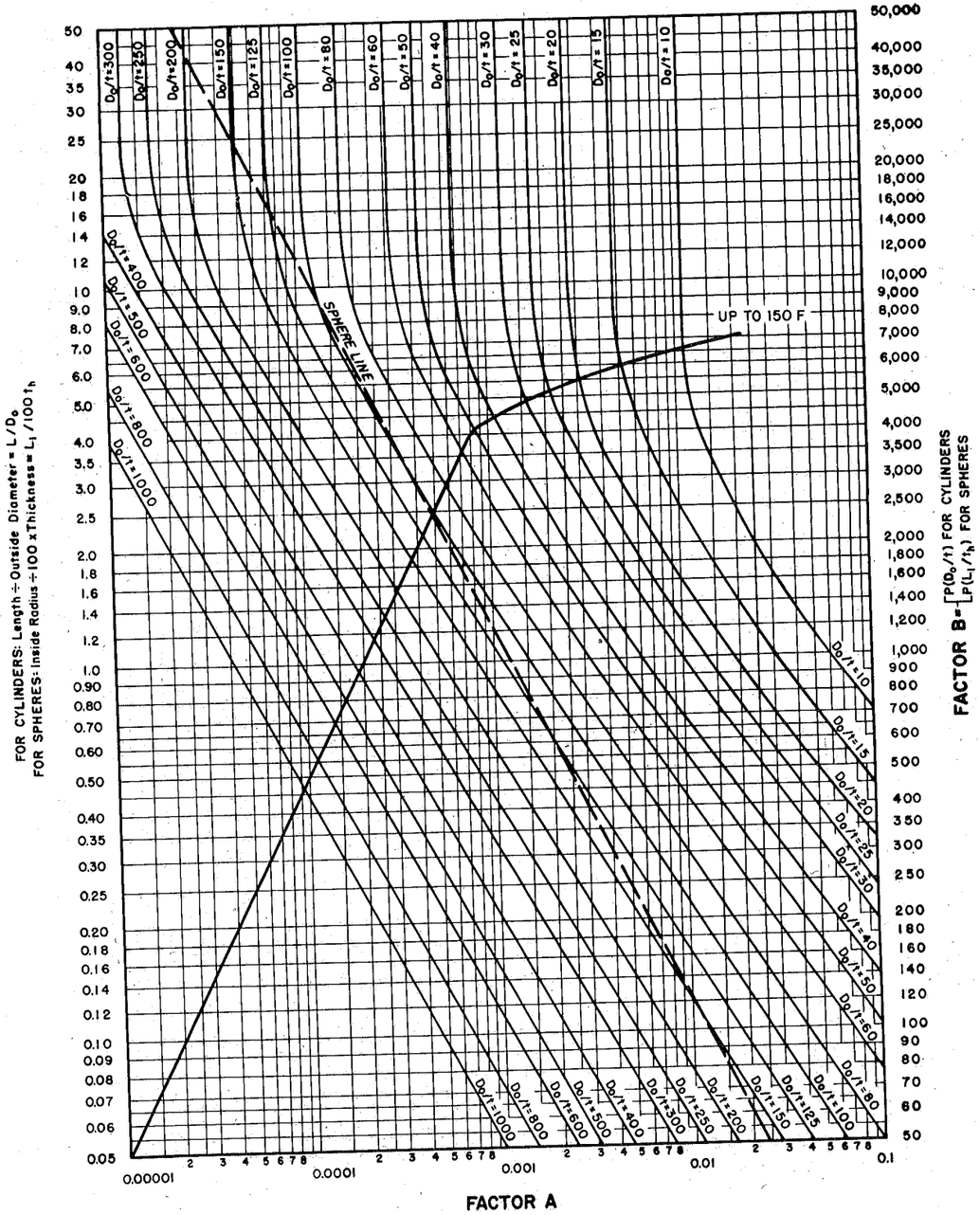

FIG. UNF 28.19 CHART FOR DETERMINING SHELL THICKNESS OF CYLINDRICAL AND SPHERICAL VESSELS UNDER EXTERNAL PRESSURE WHEN CONSTRUCTED OF ALUMINUM ALLOY 5086 IN 0 AND H112 TEMPER

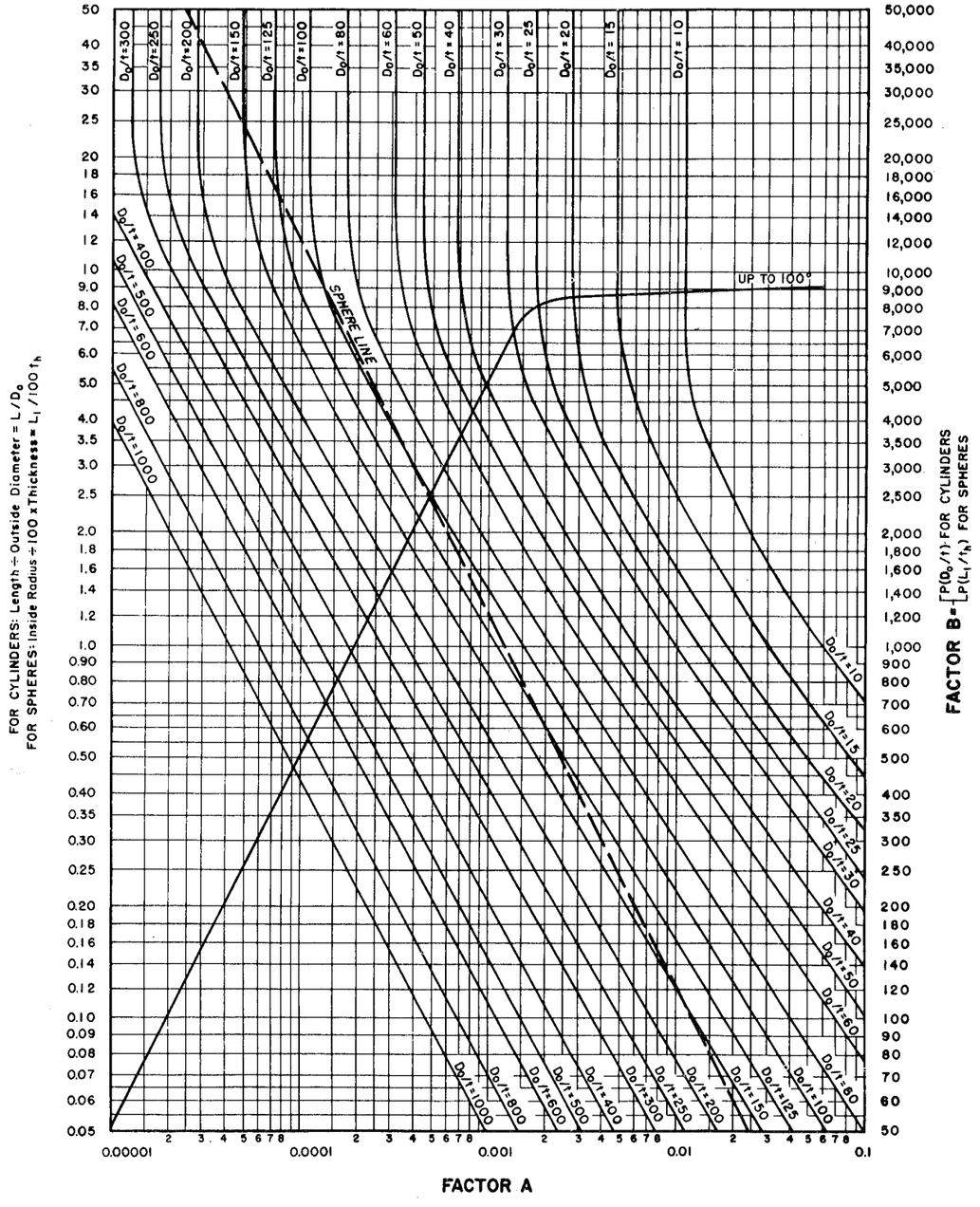

FIG. UNF-28.20 CHART FOR DETERMINING SHELL THICKNESS OF CYLINDRICAL AND SPHERICAL VESSELS UNDER EXTERNAL PRESSURE WHEN CONSTRUCTED OF ALUMINUM ALLOY 5456 IN 0 TEMPER

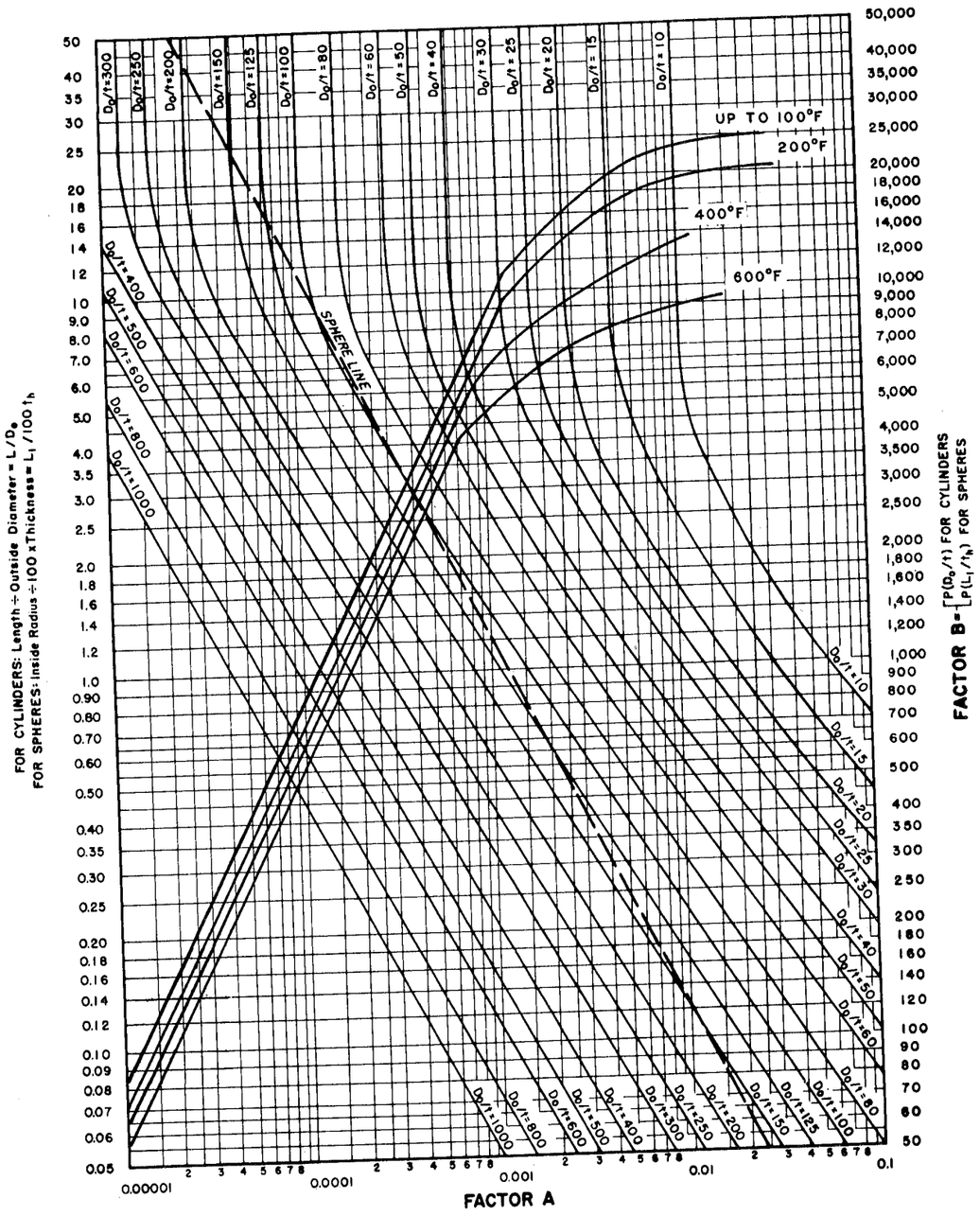

Fig. UNF-28.22 **CHART FOR DETERMINING SHELL THICKNESS OF CYLINDRICAL AND SPHERICAL VESSELS UNDER EXTERNAL PRESSURE**

WHEN CONSTRUCTED OF UNALLOYED TITANIUM, GRADE 3

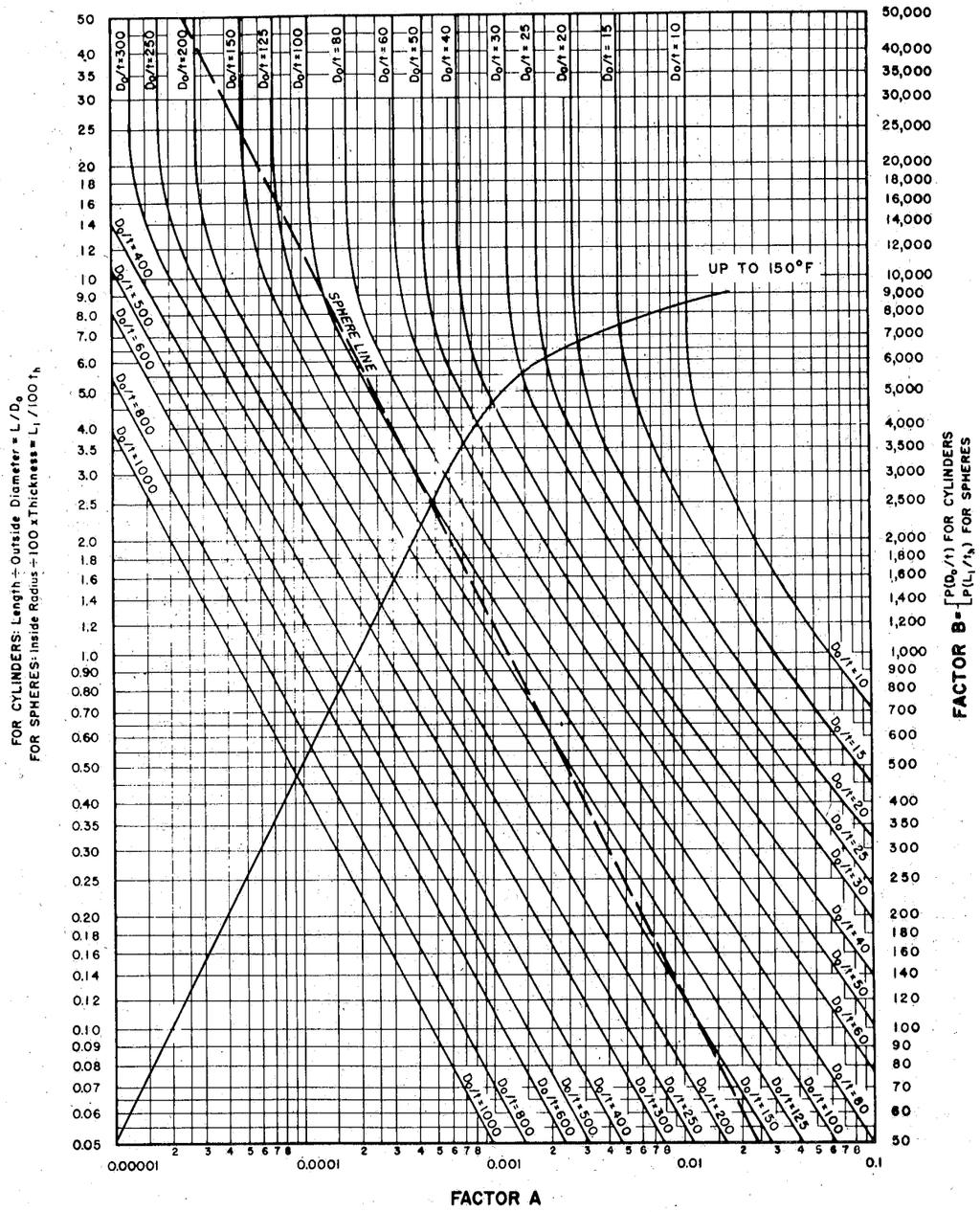

FIG. UNF-28.23 CHART FOR DETERMINING SHELL THICKNESS OF CYLINDRICAL AND SPHERICAL VESSELS UNDER EXTERNAL PRESSURE WHEN CONSTRUCTED OF ALUMINUM ALLOY 5083 (O or H-113 Temper) (For material having a Yield Strength not less than 18,000 psi)

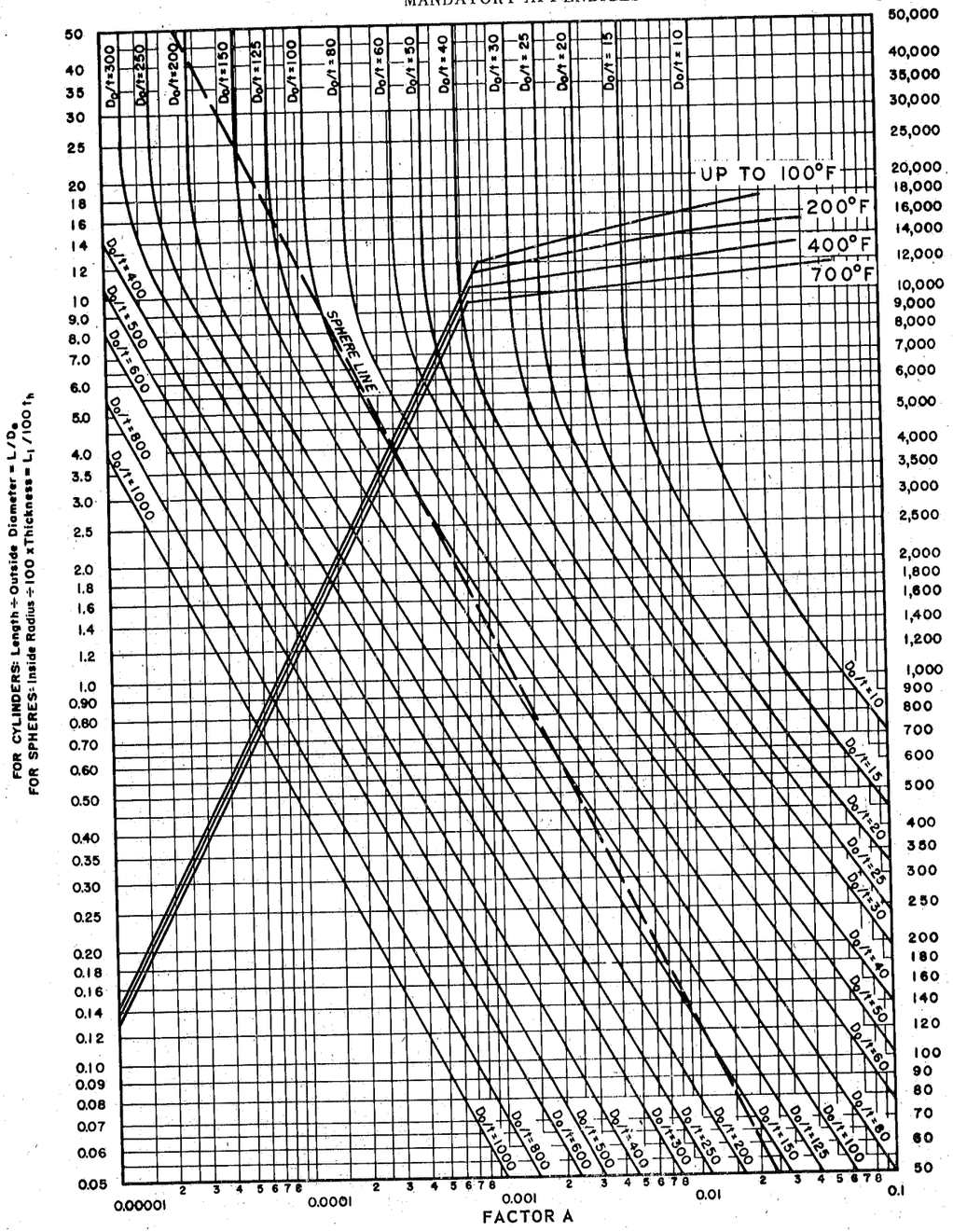

FIGURE UNF-28.25
CHART FOR DETERMINING SHELL THICKNESS OF CYLINDRICAL AND SPHERICAL VESSELS UNDER EXTERNAL PRESSURE WHEN CONSTRUCTED OF NICKEL-IRON-CHROMIUM-MOLYBDENUM-COPPER ALLOY

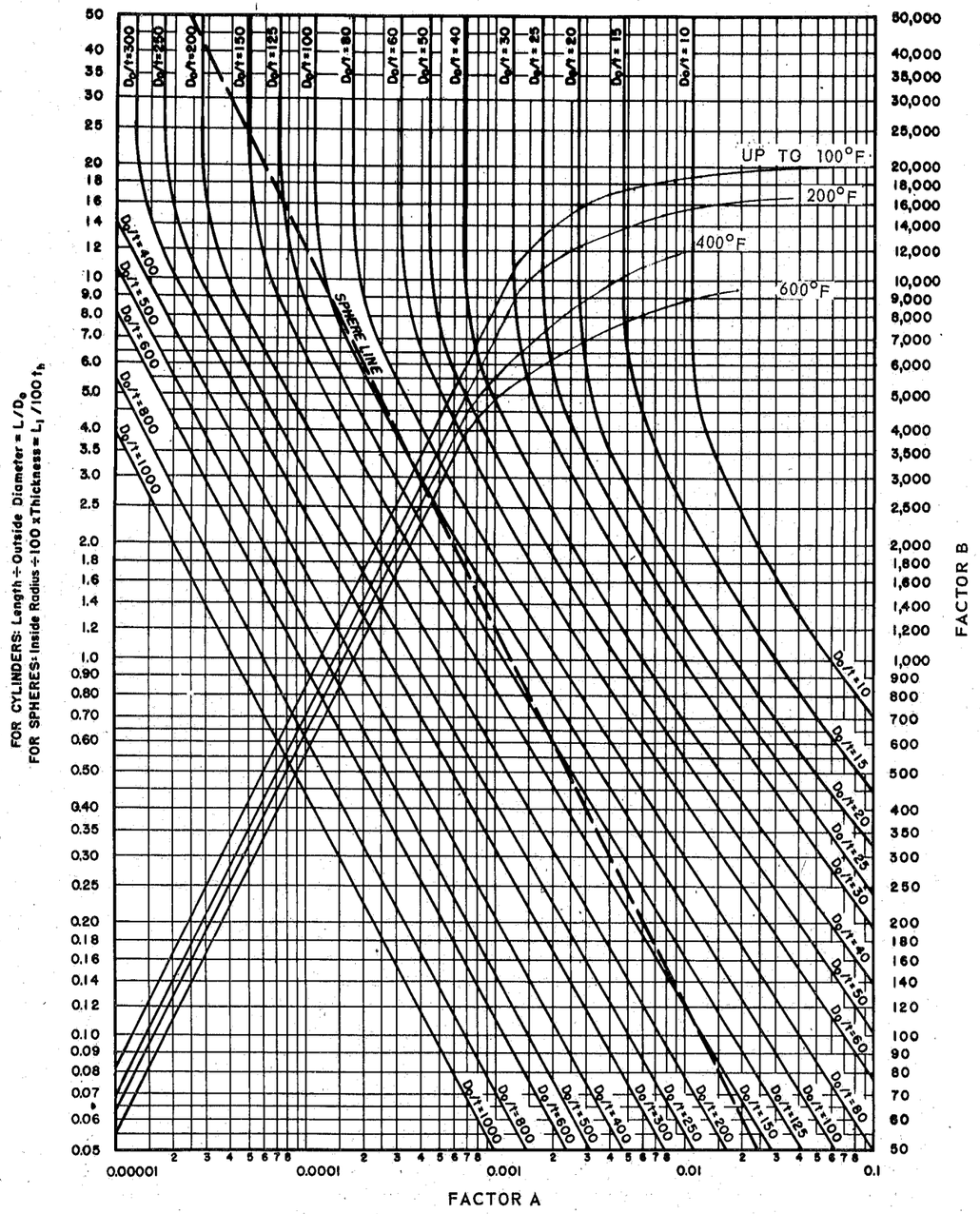

FIGURE UNF-28.28
CHART FOR DETERMINING SHELL THICKNESS OF CYLINDRICAL AND SPHERICAL VESSELS UNDER EXTERNAL PRESSURE WHEN CONSTRUCTED OF UNALLOYED TITANIUM, GRADE 2

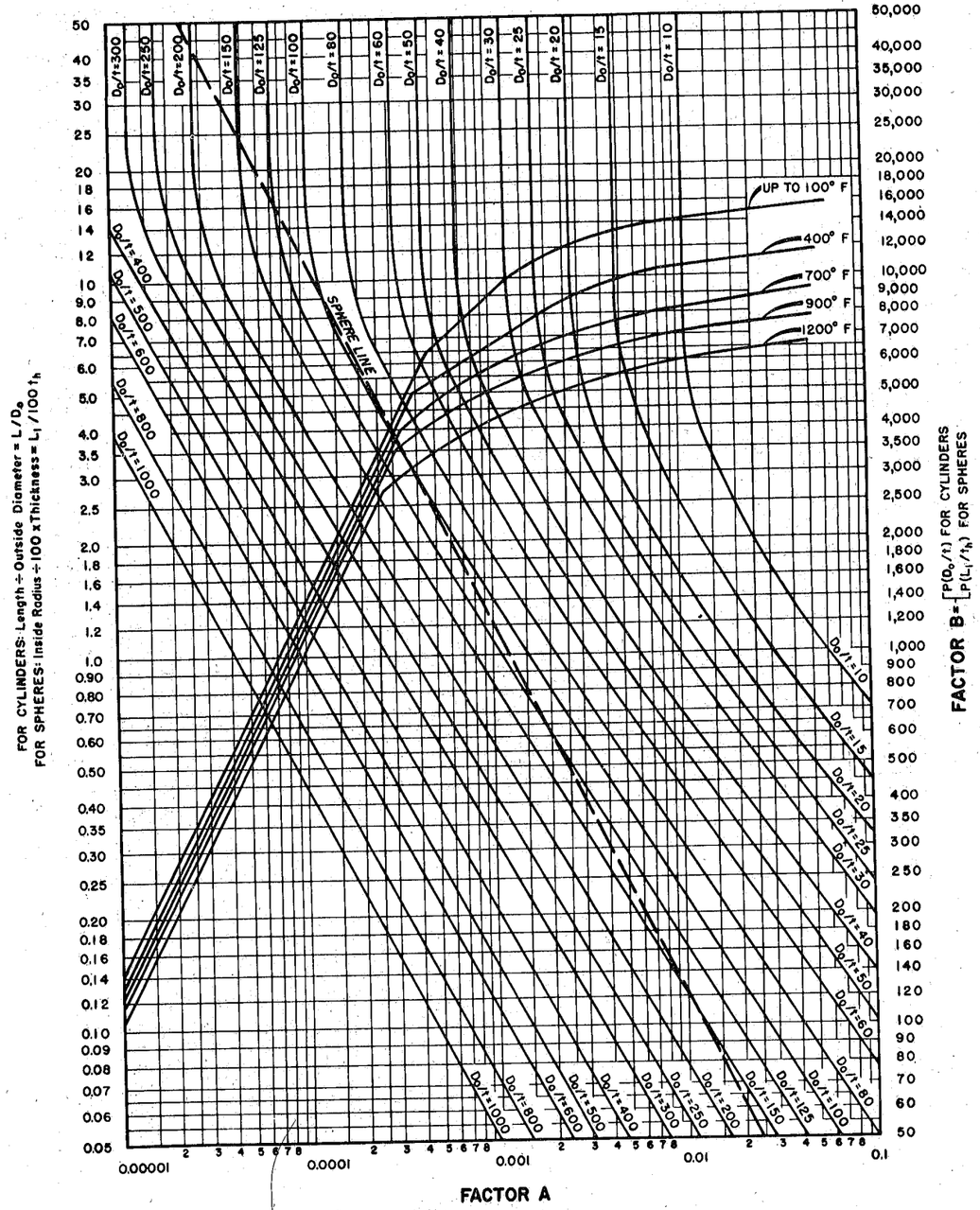

FIG. UHA-28.1 CHART FOR DETERMINING SHELL THICKNESS OF CYLINDRICAL AND SPHERICAL VESSELS UNDER EXTERNAL PRESSURE WHEN CONSTRUCTED OF AUSTENITIC STEEL (18 Cr-8 Ni, Type 304)

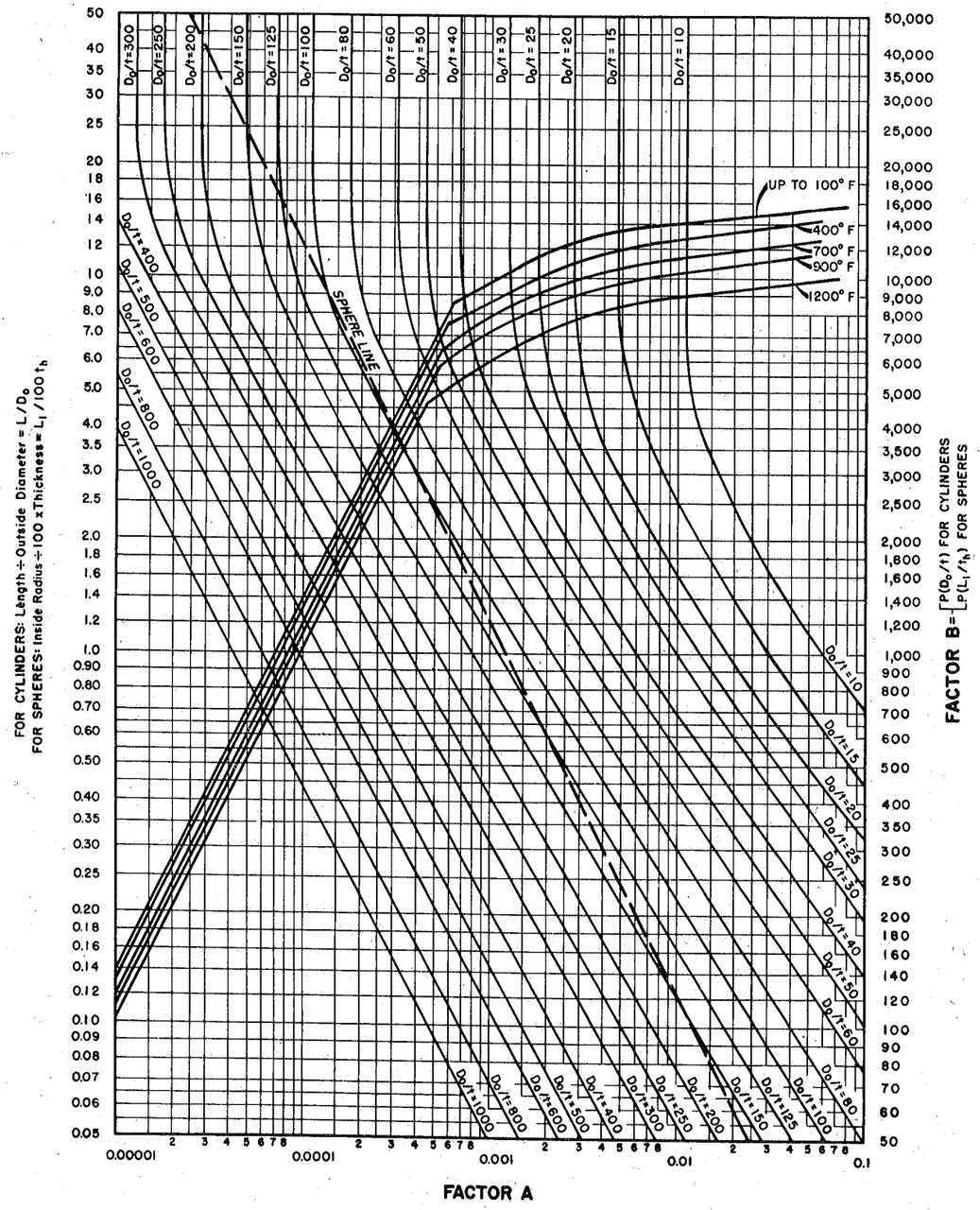

FIG. UHA-28.2 CHART FOR DETERMINING SHELL THICKNESS OF CYLINDRICAL AND SPHERICAL VESSELS UNDER EXTERNAL PRESSURE WHEN CONSTRUCTED OF AUSTENITIC STEELS
(18 Cr-8 Ni + Mo, Type 316; 18 Cr- 8 Ni + Ti, Type 321; 18 Cr-8 Ni + Cb, Type 347, 25 Cr-12Ni, Type 309 (Through 1100 F Only); 25 Cr-20Ni, Type 310)

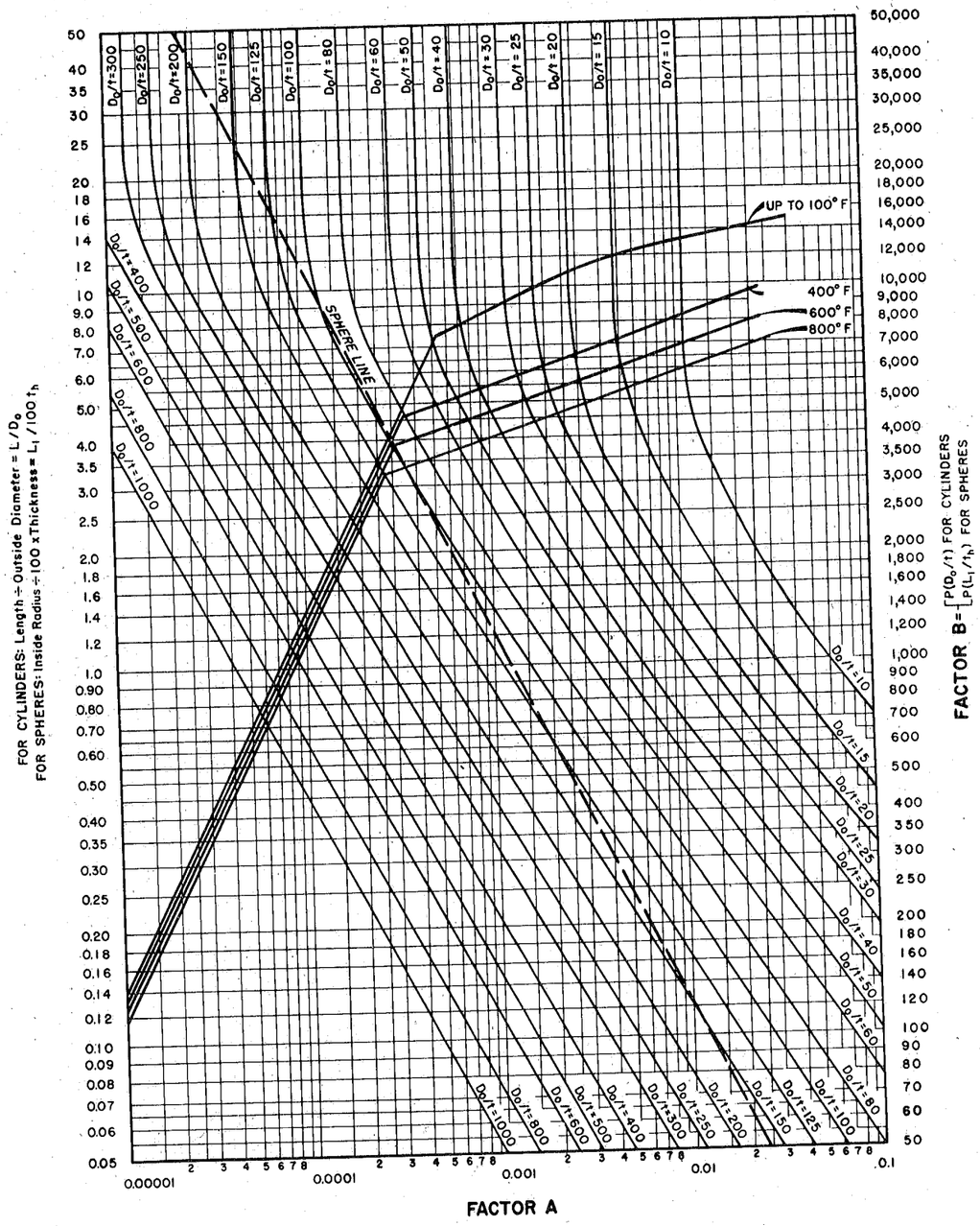

FIG. UHA-28.3 CHART FOR DETERMINING SHELL THICKNESS OF CYLINDRICAL AND SPHERICAL VESSELS UNDER EXTERNAL PRESSURE WHEN CONSTRUCTED OF AUSTENITIC STEEL
(18 Cr-8 Ni-0.03 Maximum Carbon, Type 304L)

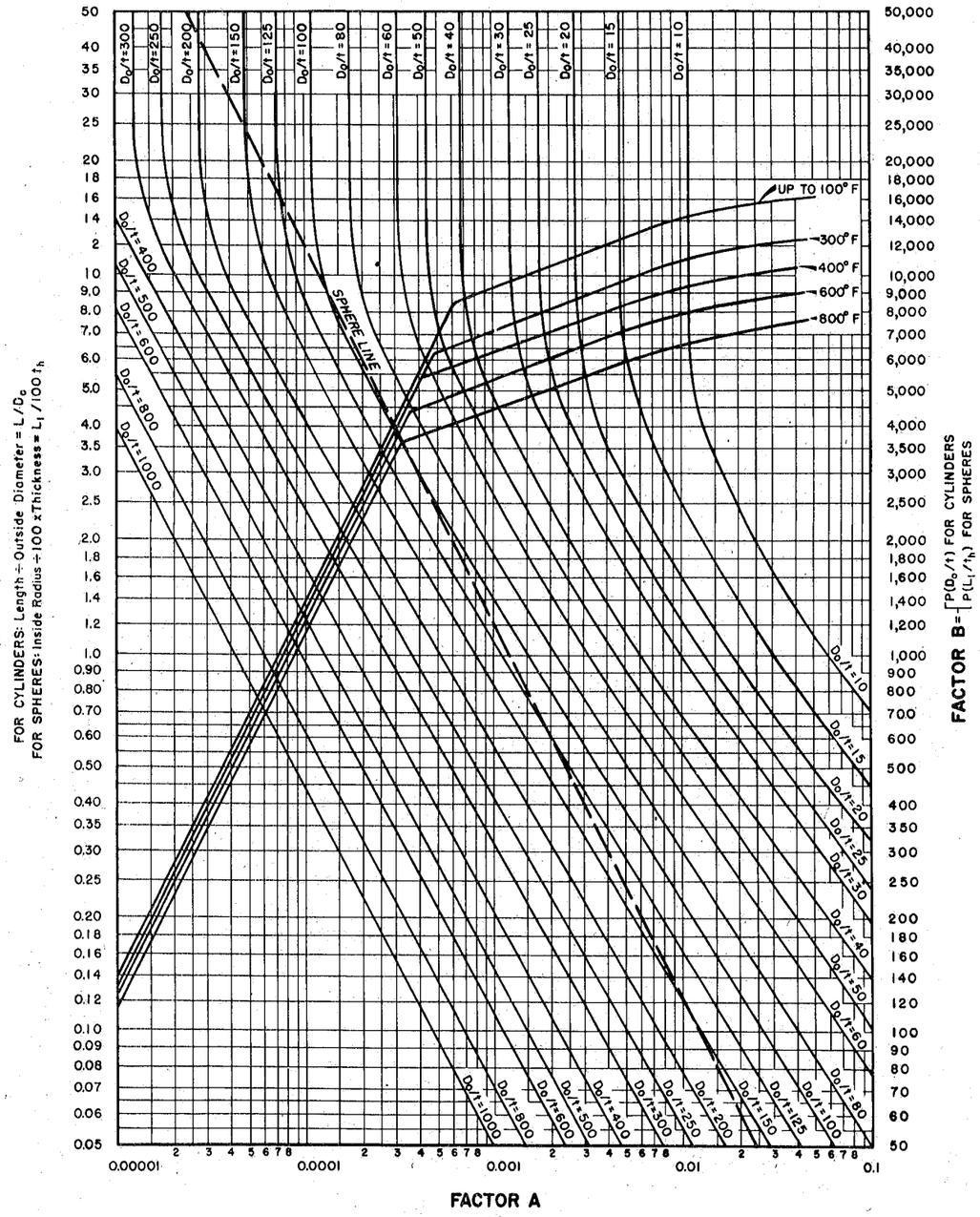

FIG. UHA-28.4 CHART FOR DETERMINING SHELL THICKNESS OF CYLINDRICAL AND SPHERICAL VESSELS UNDER EXTERNAL PRESSURE WHEN CONSTRUCTED OF AUSTENITIC STEELS
(18 Cr-8 Ni + Mo-0.03 Maximum Carbon, Types 316L & 317L)

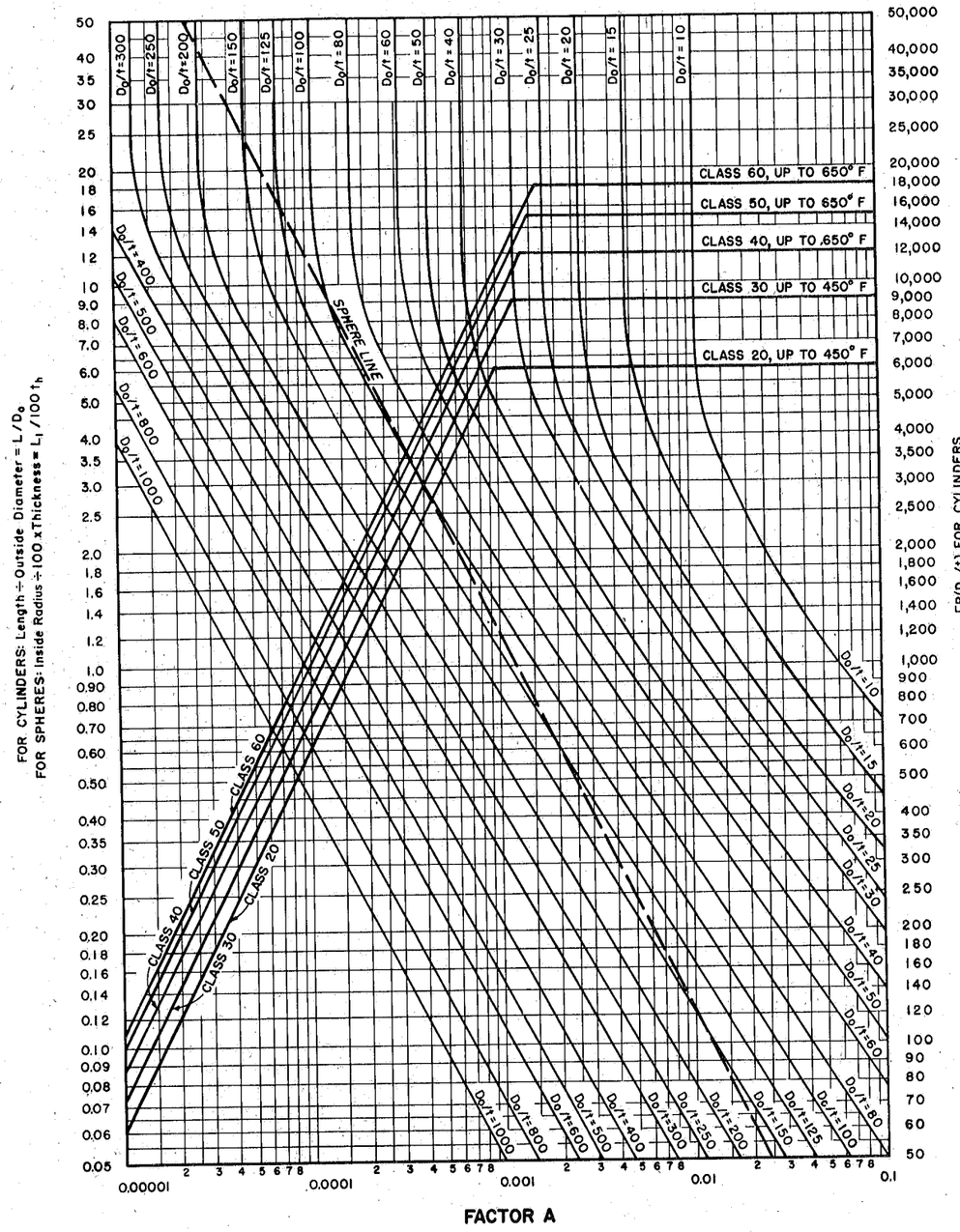

FIG. UCI-28 CHART FOR DETERMINING SHELL THICKNESS OF CYLINDRICAL AND SPHERICAL VESSELS UNDER EXTERNAL PRESSURE WHEN CONSTRUCTED OF CAST IRON

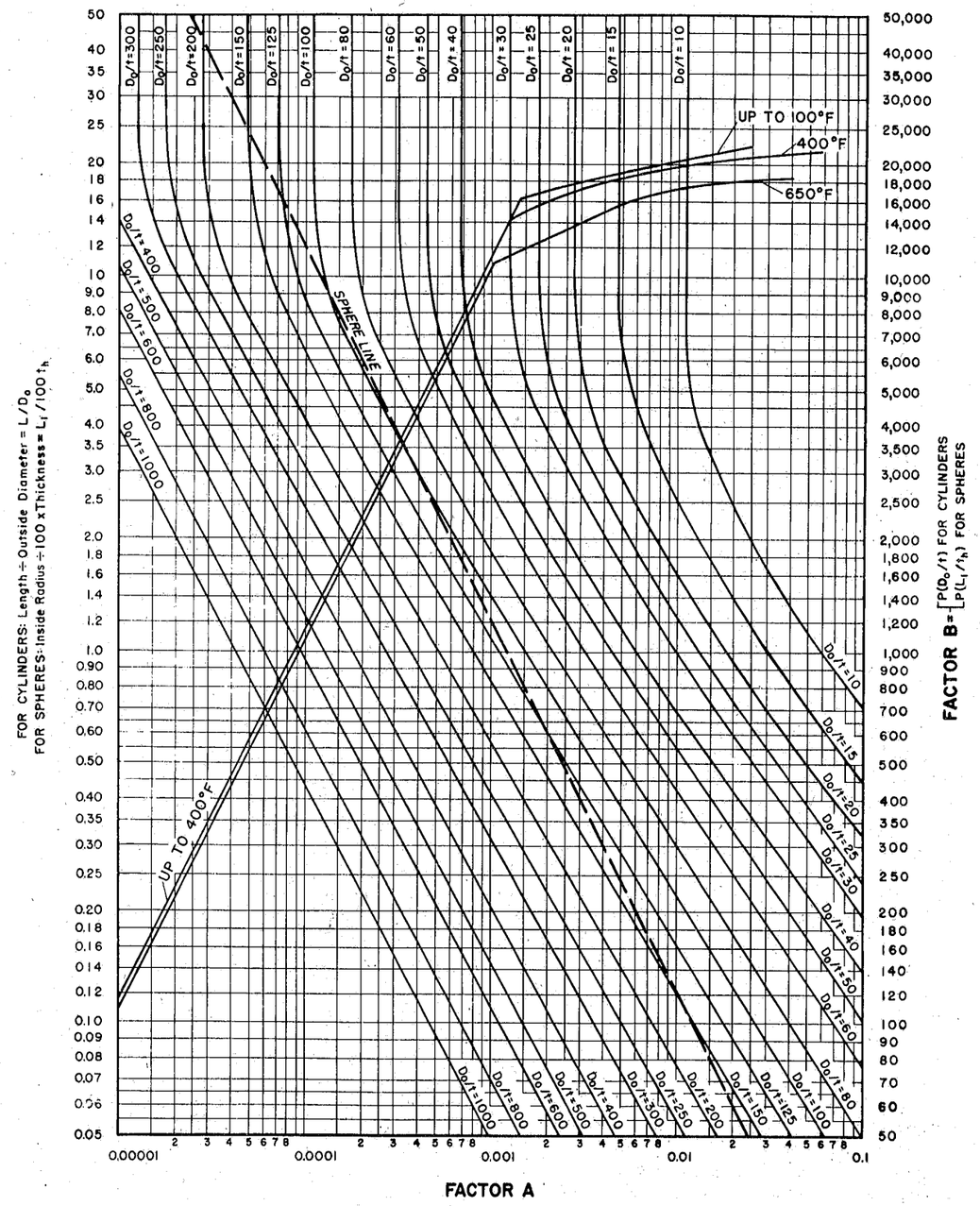

FIG. UCN-28 CHART FOR DETERMINING SHELL THICKNESS OF CYLINDRICAL AND SPHERICAL VESSELS UNDER EXTERNAL PRESSURE WHEN CONSTRUCTED OF CAST NODULAR IRON

APPENDIX VI

Methods for Magnetic Particle Examination (MT)

UA-70 Scope

(a) This Appendix describes magnetic particle examination procedures which are approved for use when magnetic particle examination is specified in this Division of Section VIII.

(b) Unless specified otherwise, any of these methods may be employed.

UA-71

(a) *General* Magnetic particle examination provides for the detection of defects such as cracks and other linear discontinuities in welds, plates, forgings, and castings. Sensitivity is greatest for surface defects and diminishes rapidly with depth below the surface. Magnetic particle examination is applicable only to ferro-magnetic materials.

(b) *Description of Method* This method of examination consists of magnetizing the area to be examined to near saturation and then applying magnetic particles to the surface. The particles will be retained on the surface at cracks and other discontinuities due to leakage in the magnetic field. The patterns will be characteristic of the type of defect present.

(c) *Magnetization* Any suitable means of establishing the necessary magnetic flux may be employed, such as by passing a current through the material, by using a magnetic yoke (the section to be examined being the "keeper") or by wrapping the part or surface with a coil through which a magnetizing current is passed.

(d) *Examination Medium* The magnetic particles used for detection of defects shall be as follows:

(1) *Dry Particles* If dry particles are used as the examination medium, they shall be of high permeability and low retentivity and of such size and shape as will produce suitable indications. It is desirable that the color be such as to provide adequate contrast with the background of the surface being examined.

(2) *Wet Particles* If wet particles are used, the particles shall be red or black or, alternatively may be fluorescent when viewed under ultraviolet illumination. The particles shall be suspended in a suitable liquid medium in the concentration recommended by the manufacturer of the particles. Amplified details on the use of wet particles are given in ASTM E-138.

(e) *Orientation of Defects* Regardless of the manner of producing the magnetic flux, the greatest sensitivity will be to linear defects lying perpendicular to the lines of flux and the least sensitivity will be to linear defects lying parallel to the lines of flux. Hence, in order to insure most effective detection of defects, it is necessary to examine each area at least twice with the lines of flux in one case approximately perpendicular to the lines of flux in the other.

(f) *Demagnetization* Demagnetization following inspection is neither required nor prohibited.

UA-72 Methods

(a) *Prod Method*

(1) *Surface Preparation* The surface to be examined shall be clean and dry. It shall be free from oil, sand, loose rust, or loose scale.

In general, satisfactory results may be obtained when the surface is in the as-welded, as-rolled, as-cast, or as-forged condition. In some cases, however, surface preparation by grinding or machining may be necessary when surface irregularities otherwise would mask the indication of defects.

(2) *Examination Medium* Magnetic particles in dry form shall be used with the prod method except that for routine production line type of inspection of parts such as castings, wet particles may be used.

(3) *Magnetizing Technique* Magnetization is accomplished by the use of portable prod-type electrical contacts pressed against the surface in the area to be examined. A remote control switch, which may be built into the prod handles, shall be provided to permit the inspector to turn the current on after the prods have been properly positioned and to turn it off before the prods are removed in order to prevent arcing.

(4) *Prod Spacing* Prod spacing shall be a maximum of 8 in. Shorter spacings may be used to meet the geometry of the area being examined or to increase sensitivity but prod spacing less than 3 in. usually is not feasible due to banding of the particles around the prods.

Care shall be taken to prevent local overheating or burning of the surface being examined, particularly on high carbon or alloy materials,

since this can cause hard spots or cracks. Lead or steel rather than copper-tipped prods are recommended where the magnetizing voltage is over 25 volts open circuit in order to avoid copper penetration.

(5) *Magnetizing Current* Direct or rectified magnetizing current normally shall be used based on 100 to 125 amperes per inch of prod spacing.

(6) *Direction of Magnetization* At least two separate examinations shall be carried out on each area. The prods shall be placed so that the magnetizing current during one is approximately perpendicular to the current during the other.

(7) *Procedure* Prods are positioned on the surface to be examined and the magnetizing current turned on. The particles are then dusted lightly over the surface. Any excess may be removed with a gentle air stream. The air stream should not disturb or remove lightly held particle patterns. In order to recognize the broad, fuzzy, lightly held patterns produced by subsurface discontinuities, it is essential to observe carefully the formation of indications while the particles are being applied, and also while any excess is being removed. Proper lighting will facilitate observation of these patterns. Indications of defects are noted. The current is then turned off and the prods repositioned for the second examination of the area.

(8) *Evaluation of Indications* Discontinuities and defects will be indicated by retention of the magnetic particles. All such indications are not necessarily defects, however, since excessive surface roughness, magnetic permeability variations (such as at the edge of heat-affected zones), etc., may produce similar indications. If indications are believed to be nonrelevant, each type of indication shall be explored to determine if relevant linear discontinuities are present.

All linear discontinuities are unacceptable and shall be removed and repaired in accordance with applicable provisions of this Division of Section VIII. Where a linear discontinuity is removed by grinding or chipping, and subsequent welding is not necessary, care shall be taken to contour the surface so as to eliminate any sharp notches or corners. When a defect appears to be removed, the area shall be reexamined by the same method to verify that it has been removed completely. If repairs are made, the repaired area shall be examined by the same method.

(b) *Coil Method*

(1) The requirements of subparagraphs (1) "Surface Preparation" and (8) "Evaluation of Indications" of Par. (a) shall apply.

(2) *Examination Medium* Either dry or wet particles shall be used as the examination medium.

(3) *Magnetizing Technique* Magnetization is developed by passing current through a multiturn coil looped around the part or section of the part that is to be examined. This produces a magnetic field parallel to the axis of the coil. The magnetic field strength of the coil shall be 3,000 to 10,000 ampere turns.

(4) *Magnetizing Current* Direct or rectified current shall be used for magnetizing.

(5) *Direction of Magnetization* At least two separate examinations shall be carried out on each area. The second examination shall be with current flow approximately at right angles to that used for the first examination in that area. A different means of magnetizing may be used for the second examination.

(6) *Procedure* After the means of magnetization have been brought into the proper relationship with the surface to be examined, the magnetizing current is turned on. The examination medium is then applied to the area to be inspected. Dry particles are applied as described in Par. (a)(7). If wet particles are used they are applied typically by spraying but other appropriate means may be employed. Indications of defects are noted and the second examination of the area is made in accordance with Par. (5) above.

(c) *Yoke Method* (1) The requirements of subparagraphs (1) "Surface Preparation" and (8) "Evaluation of Indications" of Par. (a) shall apply.

(2) *Examination Medium* Either dry or wet particles shall be used as the *examination* medium.

(3) *Magnetizing Technique*

(a) Alternating current electromagnetic yokes may be used to magnetize provided that the sensitivity to detect surface cracks is at least equivalent to that of the prod method when a direct or rectified magnetizing current of 25 to 30 amperes per inch of prod spacing is used and the lifting power of the yoke is at least 10 lb with a pole spacing of 3 to 6 in.

(b) Permanent magnetic yokes may be used to magnetize provided that the sensitivity to detect surface cracks is at least equivalent to the prod method when a direct or rectified magnetizing current of 25 to 30 amperes per inch of prod spacing is used and the lifting power of the yoke is at least 40 lb with a pole spacing of 3 to 6 in.

(4) *Direction of Magnetization* At least two separate examinations shall be carried out on each area. The second examination shall be with the magnetic flux approximately at right angles to that used in the first inspection. A different means of magnetizing may be employed for the

second examination of the area.

(5) *Procedure* After the means of magnetizing have been brought into proper relationship with the surface to be examined, the magnetic particles shall be applied per Par. (a)(7) and the examination and evaluation procedures carried out per reference paragraphs given in (1) above.

APPENDIX VII
Inspection and Testing of Steel Castings

UA-80

All steel castings shall be inspected in accordance with (a) or (b) as applicable.

(a) All steel castings 4 in. or less in body thickness (other than those made to an accepted standard such as USAS B16.5-1961) shall be inspected as follows:

(1) All critical sections[1] shall be radiographed. Radiographs shall conform to requirements of ASTM Specification E71-52, Industrial Radiographic Standards for Steel Castings. Castings shall meet Class 1 if wall thickness is less than 1 in.; Class 2 if 1 in. or over, as defined in ASTM Specification E71-52.

(2) Where the material is ferro-magnetic, all surfaces, including machined gasket seating surfaces, shall be examined by magnetic particle or liquid penetrant examination. Where the material is non-magnetic, only liquid penetrant methods shall be used.

Indications exceeding Degree 3 of Types I, II, and III and exceeding Degree 1 of Types IV and V of ASTM Specification E125-56T shall be removed. The technique for magnetic particle inspection shall be in accordance with ASTM Specification E109-57T.

(3) Where more than one casting of a particular design is produced, each of the first five castings shall be inspected as above. Where more than five castings are being produced, the examination shall be performed on the first five, plus one additional casting to represent each five additional castings. If this additional casting proves to be unacceptable, each of the remaining four castings in the group shall be inspected.

(4) Castings of non-weldable materials which contain discontinuities in excess of the maximum permitted in (a)(1) and (a)(2) shall be rejected. Such discontinuities may be removed from weldable castings, and the castings may be repaired by welding after the base metal has been inspected to assure complete removal of discontinuities. The completed repair shall be reinspected by the same method used in the original inspection. The repaired casting shall be postweld heat treated.

(5) All welding shall be performed using welding procedure qualification in accordance with Section IX. The procedure qualification shall be performed on a test specimen of cast material of the same specification and subjected to the heat treatment before and after welding as will be applied to the work. All welders and operators performing this welding shall be qualified in accordance with Section IX.

(b) All castings having a body greater than 4 in. nominal thickness and castings of lesser thickness which are intended for extremely severe applications[2] shall be inspected as follows:

(1) Each casting shall be subjected to 100% visual examination and, if magnetic, to complete magnetic particle or liquid penetrant examination. If the material is non-magnetic, only liquid penetrant methods shall be used after the visual examination. These examinations shall be performed following any heat treatment applied to the casting. All Type I indications of ASTM Specification E-125-56T and all indications exceeding Degree 1 of Types II, III, IV, and V shall be removed. The inspection technique shall be in accordance with ASTM Specification E-109-57T.

(2) All parts of castings up to 12 in. in thickness shall be subjected to complete radiographic inspection and the radiographs shall conform to the requirements of ASTM Specification E-71-52, Industrial Radiographic Standards for Steel Castings. Castings shall meet Class 1 if wall thickness is less than 1 in.; Class 2 if 1 in. or over, as defined in ASTM Specification E-71-52.

(3) All parts of castings in excess of 12 in. in thickness which are not radiographed shall be ultrasonically examined in accordance with the procedures given in ASTM Specification E-114-55T. Any discontinuities whose reflections do not exceed a height equal to 20 per cent of the normal Back Reflection or do not reduce the height of the Back Reflection by more than 30 per cent

[1] *Critical Sections:* The sections where defects are usually encountered, such as the junction of risers, gates, or feeders to the castings, and at abrupt changes in section.

[2] This Division as currently written provides minimum requirements for construction and it is recognized to be the responsibility of the designing engineer to determine when the intended service is of a nature that requires supplementary requirements to insure safety; consequently, the designs should determine when the service warrants that this class of inspection be specified for steel castings of less than 4 in. nominal body thickness.

during movement of the transducer 2 in., in any direction, shall be considered acceptable. Indications exceeding those limits shall be repaired unless proved to be acceptable by other test methods. The above limits are established with the use of transducers having approximately 1 sq in. of area.

(4) Castings having discontinuities in excess of the maximum permitted in Pars. (b)(1), (b)(2), and (b)(3) may be repaired by welding if the discontinuities are removed. To ensure complete removal of such discontinuities, prior to making repairs the base metal shall be examined by magnetic particle or liquid penetrant examination if it is magnetic or by liquid penetrant examination if it is non-magnetic.

(5) All weld repairs of depth exceeding 1 in. or 20 per cent of the section thickness, whichever is the lesser, shall be inspected by radiography in accordance with Par. (b)(2) and by magnetic particle examination or liquid penetrant examination if the material is magnetic or by liquid penetrant examination if it is non-magnetic. Where the depth of repairs is less than 20% of the section thickness, or 1 in., whichever is the lesser, and where the repaired section can not be radiographed effectively, the first layer of each ¼ in. thickness of deposited weld metal and the finished weld surface shall be examined as indicated previously by magnetic particle or liquid penetrant examination. The finished surface examination shall be made after any heat treating operations that are applied to the casting. Weld repairs resulting from ultrasonic examination shall be examined by ultrasonic methods.

(6) When repair welding is done after heat treatment of the casting, the casting shall be postweld heat treated.

(7) All welding shall be performed using welding procedure qualification in accordance with Section IX. The procedure qualification shall be performed on test specimen of cast material of the same specification and subjected to the heat-treatment before and after welding as will be applied to the work. All welders and operators performing this welding shall also be qualified in accordance with Section IX.

(c) *Identification and Marking* Each casting shall be marked with the manufacturer's name and the casting identification, including material designation. The manufacturer shall furnish reports of the chemical and mechanical properties and certification that each casting conforms to all the applicable requirements.

APPENDIX VIII

Methods for Liquid Penetrant Examination (PT)

Note: Satisfactory application of this method of examination requires special skills in the techniques involved and in interpreting the results. The requirements specified herein presume application by suitably experienced personnel.

UA-91 Scope

(a) This Appendix describes methods which shall be employed whenever liquid penetrant examination is specified in this Division of Section VIII. The procedures are substantially in conformance with ASTM Standard E-165-60T, "Methods for Liquid Penetrant Inspection," and reference to this standard may be made for additional details on procedures given herein.

(b) Two basic methods are approved for use, each with three choices of type of penetrant. Unless specified otherwise, any of the methods described may be employed.

UA-92 Description of Method

Liquid penetrant examination is a method of nondestructive examination which provides for the detection of discontinuities open to the surface in ferrous and nonferrous materials which are nonporous. Typical discontinuities detectable by this method are cracks, seams, laps, cold shuts, and laminations.

A liquid penetrant is applied to the surface to be examined and allowed to enter such openings, after which, excess liquid is removed. A developer is then applied which is wetted or otherwise affected by the penetrant entrapped in the discontinuities. This increases the evidence of the discontinuities so that they may be seen either directly or by use of "black light."

UA-93 Approved Methods

(a) Either a visible dye penetrant or a fluorescent penetrant may be used. In each case, there are three types:

(1) Water-Washable Penetrants
(2) Post-Emulsifying Penetrants
(3) Solvent-Removable Penetrants

(b) *Visible Dye Penetrants* contain a dye, the contrasting color of which can be seen readily in daylight or under normal interior illumination.

(c) *Fluorescent Penetrants* carry a dye that fluoresces under "black light."

UA-94 Procedures

(a) *Cleaning:* It is essential that the part or surface to be examined be clean. Since the success of the method depends upon entry of the penetrant into any defects present, the requirement for cleanliness is paramount. Cleanliness in this application shall be interpreted to include the removal of all rust, scale, welding flux, spatter, grease, oily films, water, dirt, etc., not only from the surface but, more particularly, from any defects present.

Typical cleaning facilities applicable for this purpose are detergents, organic solvents, descaling solutions or paint removers, and vapor degreasing, abrasive blasting or ultrasonic cleaning methods.

(b) *Drying:* It is essential that the part or surface to be examined be sufficiently dried prior to application of penetrant so that no trace of water or cleaning agent remains in any defects that are present.

(c) *Penetrant Application:* The penetrant is applied by dipping, brushing, or spraying. Penetration time is critical. In general, the finer and tighter the discontinuity, the longer the penetration time should be. The penetration time shall be at least 3 minutes but this minimum time may have to be extended under certain conditions such as when the temperature is below 60F. At 40F, for example, twice the time required above 60F is suggested.

As a standard technique, the temperature of the surface or part to be examined, the liquid penetrant, the rinse, and the developer shall not be below 40F nor above 125F throughout the examination period. Local heating or cooling is permitted provided temperatures remain in the range of 40–125F during the examination. Where it is impracticable to comply with the foregoing temperature limitations, other temperatures and times may be used providing that the procedure is qualified by use of a liquid penetrant comparator prepared and used as described in Par. UA-99.

(d) *Excess Penetrant Removal:* After suitable penetration time has elapsed, any penetrant remaining on the surface shall be removed. Insufficient removal will leave a background which will

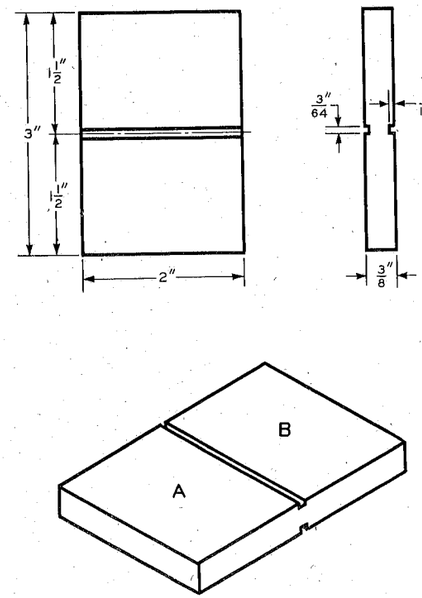

FIG. UA-99 LIQUID PENETRANT COMPARATOR

interfere with subsequent indication of defects. Care must be exercised that penetrant in any defects is not removed.

(1) With water-washable penetrants, it is recommended that the excess be removed with a water spray. Water pressures over 50 psi or water temperatures over 110F should not be employed.

(2) With Post-Emulsifying penetrants, an additional step is required. This is the application of a liquid emulsifier prior to the rinsing operation. The emulsifier may be applied by spraying, or dipping. The emulsifying time is critical and depends on surface roughness and type of defects sought. It may vary from 10 seconds to 5 minutes. The usual time is 2 to 3 minutes. After emulsification, the mixture is removed by a water spray, using the same procedure as for water-washable liquid penetrants.

(3) With solvent removable penetrants, excess penetrant may be removed from the surface by wiping with rags or cloths moistened with the solvent. Care should be employed not to use an excess of the solvent in order to avoid removing penetrant from defects. On smooth surfaces it may be possible sometimes to remove excess penetrant merely by wiping the surface with clean dry rags or cloth.

(e) *Developing:* There are two types of developer, dry and wet, either of which may be used.

(1) The dry developer is a powder that is applied by a soft brush, a hand powder bulb, or a powder gun. Other means more suitable to the size and geometry of the specimen may be used provided the objective is accomplished. This is to deposit a film of developer on the surface to be examined. The surface should be dried before application of the powder, preferably by warm air. The normal developing time required to draw penetrant in the discontinuities into the powder on the surface is about one-half the time allowed for penetration.

(2) The liquid developer is a suspension of powder in water or a volatile solvent. It is applied by dipping, spraying, or brushing. In any case, when the developer dries, a film of powder is left on the surface. Where a water suspension developer is used, drying time may be decreased by the use of warm air.

UA-95 Examination

The true size and type of defect are difficult to appraise if the dye diffuses excessively in the developer. Consequently, it is good practice to conduct the examination soon after applying the developer. In no case shall the examination be made later than 30 minutes after the developer has dried.

(a) *With Visible Penetrants,* the developer forms a more or less even white coating. Surface defects are indicated by bleeding out of the penetrant, which is normally of a deep red color. Adequate illumination shall be provided since otherwise sensitivity will be diminished.

(b) *With Fluorescent Penetrants,* the mechanism is essentially the same except that the examination is conducted in a darkened area using "black light". A "black light" filter shall be used on such that the light emitted shall be essentially in the 3650 Angstrom wave length band. An intensity of illumination of 90 to 100 foot candles measured with the filter in place is required for satisfactory indication of defects.

UA-96 Evaluation of Indications

(a) *Linear Indications* are those indications in which the length is more than twice the width.

(b) *Rounded Indications* are indications which are circular or elliptical with the length less than twice the width.

(c) Any questionable or doubtful indications shall be retested to verify whether or not actual defects are present.

(d) General broad areas of pigment penetration shall be interpreted as indicative of improper processing. Such areas shall be retested with a suitably modified procedure.

UA-97 Acceptance Standards

All surfaces required to be examined shall be free of linear defects (cracks, laps, fissures, etc.) and of four or more rounded defects in a line separated by 1/16 in. or less (edge to edge) except where the specification for the material establishes different requirements for acceptance so far as defects are concerned.

UA-98 Defect Removal and Repair

Unacceptable defects shall be removed and a reexamination made to assure the complete removal. Whenever a defect is removed and subsequent repair by welding is not required, the excavated area shall be blended into the surrounding surface so as to avoid sharp notches, crevices, or corners. Where welding is required after removal of a defect, the area shall be cleaned and welding performed in accordance with a qualified welding procedure. Completed repairs shall be reexamined by the method originally used for detection of the defect.

UA-99 Qualification of Procedures for Nonstandard Temperatures

(a) *General:* When it is impracticable to conduct a liquid penetrant examination within the temperature range of 40 to 125 F, the examination procedure at the proposed temperature must be qualified. This is accomplished by producing quench cracks in an aluminum block, which for this purpose is designated as a "liquid penetrant comparator", and then examining one section of the block at the proposed temperature and the other section of the block at a temperature in the range of 60 to 90 F.

(b) *The liquid penetrant comparator* shall be made of aluminum SB-211, Type 2024, as rolled, 3/8 in. thick and shall have a face dimension of 2 in. × 3 in. At the center of each face, an area approximately 1 in. in diameter shall be marked with a 950 F temperature indicating crayon or paint. The marked area shall be heated by a blow torch, a Bunsen burner or a similar device to a temperature of 950 to 975 F. The specimen is then quenched in cold water, which will produce a network of fine cracks on each of the faces. The block shall then be dried by heating to 300 F, after which a groove shall be machined across the center of each face 1/16 in. deep and 3/64 in. wide. One-half of the specimen shall be designated as "A" and the other as "B" for identification in subsequent procedures. Figure UA-99 shows the comparator after the grooves have been cut.

(c) If it is desired to qualify a liquid penetrant examination procedure at a temperature less than 40 F, for example, the proposed procedure shall be applied to area "B" after the block and all testing materials have been cooled to the proposed examination temperature. The block then shall be allowed to warm to 60 to 90 F and area "A" examined in a manner which has been demonstrated to be suitable for use in this temperature range.

The indications of cracks shall be compared for areas "A" and "B". If the indications obtained under the proposed conditions are essentially the same as those obtained under the examination at 60 to 90 F, the proposed procedure may be considered qualified for use.

(d) If the proposed temperature for the examination is above 125 F, then only the block need be held at this temperature throughout the examination of the "B" section.

Non-Mandatory Appendices

APPENDIX A
(Non-Mandatory Appendix A Now Mandatory Appendix IV)

APPENDIX B
Approval of New Materials Under the ASME Boiler and Pressure Vessel Code

UA-110 Code Policy

(a) It is the policy of the ASME Boiler and Pressure Vessel Committee to adopt for inclusion in Section II of the Code only such specifications as have been adopted by the American Society for Testing and Materials.

(b) It is expected that requests for Code approval will normally be for materials for which there is an ASTM Specification. For other materials, request should be made to ASTM to develop a specification which can be presented to the Code Committee.

UA-111 Mechanical Properties

(a) Together with the Specification for the material, the inquirer shall furnish the Committee with adequate data on which to base allowable stress values for inclusion in the applicable stress table. The data shall include values of ultimate strength, yield strength, reduction of area, elongation, creep-strength and stress-rupture strength of base metal and welded joints over the range of temperatures at which the material is to be used. Any heat-treatment that is required to produce the tensile properties should

be fully described. Adequate data on the notch toughness in the proposed range of service temperatures must be furnished. Service experience in the temperature range contemplated will be useful to the committee.

(b) If the material is to be used in vessels to operate under external pressure, stress-strain curves (tension or compression) shall be furnished for a range of design temperature desired.

UA-112 Weldability

The inquirer shall furnish complete data on the weldability of material intended for welding including data on procedure and performance qualification tests made in accordance with the requirements of Section IX of the Code. Welding tests shall be made over the full range of thickness in which the material is to be used. Pertinent information, such as heat-treatment required, susceptibility to air-hardening, and the amount of experience in welding the material shall be given.

UA-113 Physical Changes

It is important to know the structural stability characteristics and the degree of retention of properties with exposure at temperature of new materials. The influence of fabrication practices such as forming, welding and thermal treatments of the mechanical properties, ductility and microstructure of the material are important, particularly where a degradation in properties may be encountered. Where particular temperature ranges of exposure or heat treatment, cooling rates, combinations of mechanical working and thermal treatments, fabrication practices, etc. cause significant changes in the mechanical properties, microstructure, resistance to brittle fracture, etc., it is of prime importance to call attention to those conditions which should be avoided in service or in the manufacture and fabrication of parts or vessels from the material.

UA-114

The inquirer shall state whether or not the material is covered by patents and whether or not it is licensed and if licensed the limitations on its manufacture.

UA-115 Code Case

In exceptional circumstances, the Code Committee will consider the issuance of a Code Case effective for a period of three years permitting the use of a material provided that the following conditions are met:

(1) The inquirer provides evidence that a specification for the material is before ASTM.

(2) The material is commercially available and can be purchased within the specified range of chemical and tensile requirements and other requirements described in UA-111.

(3) The inquirer shows that there will be a reasonable demand for the material by industry and that there exists an urgency for approval by means of a Code Case.

(4) The request for approval of the material shall clearly describe it in ASTM specification form, including such items as scope, process, manufacture, conditions for delivery, heat treatment, chemical and tensile requirements, bending properties, testing specifications and requirements, workmanship, finish, marking, inspection and rejection.

(5) The inquirer shall furnish the Code Committee with all the data specified in Pars. UA-111 to UA-114.

APPENDIX C

Suggested Methods for Obtaining the Operating Temperature of Vessel Walls in Service

UA-130

At least three thermocouples shall be installed on vessels that are to have contents at temperatures above that at which the allowable stress value of the material is less than its allowable stress value at 100 F. One of the thermocouples shall be on the head that will be subject to the higher temperature, and the other two shall be on the shell in the zone of maximum temperature. For a number of vessels in similar service in the same plant, thermocouples need be attached to one vessel only of each group or battery, provided that each vessel has a suitable temperature-measuring device to show the temperature of the entering fluid, in order that a comparison of the operation of the different vessels can be made and any abnormal operation immediately detected. Thermocouples shall be attached to the outside surface of the vessel by inserting the terminals separately in two small holes drilled into the shell approximately ½ in. center-to-center and firmly securing them therein, or by some other equally satisfactory method.

UA-131

In lieu of the provisions in the preceding paragraph, it shall be optional to provide a thermocouple or other temperature-measuring device for obtaining the temperature of the fluid in the zone of the vessel having the highest temperature. In this case, the metal temperature shall be assumed to be the same as the maximum fluid temperature.

APPENDIX D

Suggested Good Practice Regarding Internal Structures

UA-140

Pressure vessels that have heavy internal structures such as trays and baffles are subject to damage due to failure of the connections that support the structures.

UA-141

The designer should have this possible hazard in mind and provide supports of sufficient strength with due allowance for corrosion.

UA-142

Following are some suggestions that should be considered in the design of internal structures:

(1) Connections to the vessel wall should be designed to prevent excessive tensile stress outward from the wall face due to the connection. (See Par. UG-55.)

(2) Structures should rest on top of their supports in preference to being suspended from them.

(3) Additional metal should be provided when corrosion is expected. The corrosion allowance need not be the same as in the vessel, if the supports and structures can be replaced more readily and economically than the vessel.

(4) Corrosion-resistant metals may be used in the fabrication of the structures and supports.

APPENDIX E
Suggested Good Practice Regarding Corrosion Allowance[1]

UA-155

From the standpoint of corrosion, pressure vessels may be classified under one of the following groups:

(1) Vessels in which corrosion rates may be definitely established from information available to the designer regarding the chemical characteristics of the substances they are to contain. Such information may, in the case of standard commercial products, be obtained from published sources, or, where special processes are involved, from reliable records compiled from results of previous observations by the user or others under similar conditions of operation;

(2) Vessels in which corrosion rates, while known to be relatively high, are either variable or indeterminate in magnitude;

(3) Vessels in which corrosion rates, while indeterminate, are known to be relatively low;

(4) Vessels in which corrosion effects are known to be negligible or entirely absent.

UA-156

When the rate of corrosion is closely predictable, additional metal thickness over and above that required for the initial operating conditions should be provided, which should be at least equal to the expected corrosion loss during the desired life of the vessel.

UA-157

When corrosion effects are indeterminate prior to design of the vessel, although known to be inherent to some degree in the service for which the vessel is to be used, or when corrosion is incidental, localized, and/or variable in rate and extent, the designer must exercise his best judgment in establishing a reasonable maximum excess shell thickness. This minimum allowance may, of course, be increased according to the designer's judgment.

UA-158

When corrosion effects can be shown to be negligible or entirely absent, no excess thickness need be provided.

UA-159

When a vessel goes into corrosive service without previous service experience, it is recommended that service inspections be made at frequent intervals until the nature and rate of corrosion in service can be definitely established. The data thus secured should determine the subsequent intervals between service inspections and the probable safe operating life of the vessel.

[1] When using High Alloys and Nonferrous materials either for solid wall or clad or lined vessels, refer to Pars. UHA-6, UCL-3, and UNF-4, as appropriate.

APPENDIX F
Suggested Good Practice Regarding Linings

UA-170

When protective linings are used, the amount of additional shell thickness provided to compensate for corrosion effects will depend largely on the nature of the protective material itself, as well as on the degree of knowledge available regarding its resistivity under the intended operating conditions.

UA-171

(a) When corrosion-resistant metal linings are used, either as a surface layer integral with the

shell plate, or in deposited form as applied with a so-called metal gun, or in sheet form mechanically attached, the base plate may be only as thick as required for design operating conditions, provided, however, the thickness of such lining is sufficient to afford an estimated life equal at least to twice the length of the initial inspection period and that application of the material is such as to preclude any possibility of contact between the corrosive agent and the steel shell by infiltration or seepage through or past the lining.

(b) Before strip-lining or joint-covering strips are applied to carbon steel base plate, the surface shall be closely inspected to assure that it is properly prepared, and that it is free of all foreign matter, rust, scale, and moisture. It may be necessary to sand-blast, or to hot-air dry the surface, or both.

UA-172

No paint of any type should be considered as a permanent protection. When paint is applied to the inside of a vessel, corrosion allowance should be added to the wall thickness of the vessel as if it were unprotected, the paint serving only to extend the life of the vessel if the protection is effective.

UA-173

When the test fluid seeps behind the applied liner, there is danger that the fluid will remain in place until the vessel is put in service. In cases where the operating temperature of the vessel is above the boiling point of the test fluid, the vessel should be heated slowly for a sufficient time to drive out all test fluid from behind the applied liner without damage to the liner. This heating operation may be performed at the vessel manufacturing plant or at the plant where the vessel is being installed. After the test fluid is driven out, the lining should be repaired by welding.

APPENDIX G
Suggested Good Practice Regarding Design of Supports

UA-185

A vessel supported in a vertical or horizontal position will have concentrated loads imposed on the shell in the region where the supports are attached. When vessels are subject to internal pressure, lower secondary stresses may exist in the shell adjacent to the attachment of such supports than when the vessel is filled with water before any pressure is imposed other than that caused by the hydrostatic head. Calculations to resist the forces involved are not given here because they involve so many variables depending upon the size and weight of vessels, the temperature of service, the internal pressure, the arrangement of the supporting structure, and the piping attached to the vessel as installed.

UA-186

The details of supports should conform to good structural practice, bearing in mind the following items (see Manual of the American Institute of Steel Construction for 1957, "Steel Construction"):

(1) All supports should be designed to prevent excessive localized stresses due to temperature changes in the vessel or deformations produced by the internal pressure. Any arrangement of the structure which does not permit expansion and contraction of the shell will tend to weaken the vessel.

(2) External stays in ring girders, or any internal framing that may support other internal parts, may also exert a stiffening effect on the shell where exterior supporting members of the vessel are to be attached. This stiffening effect may be beneficial or harmful, depending upon the operating temperature and the location of

the stiffening members.

(3) Columns supporting field-assembled vessels and bearing loads which may produce high secondary stresses in the vessel wall should be so designed at the attachment to the wall that no high stress concentration can occur near changes in shape, gusset plates if any, or at ends of attachment welds. It is preferable to use details permitting continuous welds extending completely around the periphery of the attachment, and to avoid intermittent or dead-end welds at which there may be local stress concentration. A thicker wall plate at the support may serve to reduce secondary stresses and, if desired, a complete ring of thicker wall plates may be installed.

(4) When superimposed forces on the vessel wall occurring at the attachment for principal struts or gussets and supports of any kind can produce high bending stresses, and when thicker wall plates do not seem appropriate, an oval or circular reinforcing plate may be used. The attachment of such reinforcing plates should be designed to minimize flexing of the plate under forces normal to the surface of the vessel.

UA-187

Vertical vessels may be supported on a number of posts without substantial ring girder bracing them around the shell, provided they attach to the shell where the latter is reinforced in an equivalent manner by the head of the vessel or by an intermediate partition.

UA-188

Where vertical vessels are supported by lugs or brackets attached to the shell, the supporting members under these bearing attachments shall preferably be as close to the shell as clearances for insulation will permit. The choice between a number of brackets and a ring girder will depend upon the applicable conditions for each individual vessel.

UA-189

For large and heavy vertical vessels to be supported by skirts, the conditions of loading under hydrostatic tests, before pressure is applied, or for any possible combination of loadings (see Par. UG-22) under the highest expected metal temperature in service for the normal operating pressure, shall be compared in determining the best location for the line of skirt attachment. In applying Pars. UG-22 and UG-23 (a) to vertical vessels supported on skirts, the following shall be considered in addition to pressure effects:

(1) The skirt reaction:

(a) The weight of vessel and contents transmitted in compression to the skirt by the shell above the level of the skirt attachment.

(b) The weight of vessel and contents transmitted to the skirt by the weight in the shell below the level of skirt attachment.

(c) The maximum load intensity due to externally applied moments and forces when these are a factor, e.g., wind, earthquake, or piping loads.

(2) The stress in the vessel wall due to the effects enumerated in (1). Localized longitudinal bending and circumferential compressive stresses of high order may exist in the metal of the shell and skirt near the circle of the skirt attachment if the skirt reaction is not substantially tangent to the vessel wall. When a cylindrical skirt is fillet-welded to the shell above the head tangent line, the localized bending is similar to a lap girth joint and may be normally considered satisfactory. When the skirt is attached below the head tangent line, localized stresses are introduced in proportion to the component of the skirt reaction which is normal to the head surface at the point of attachment; when the mean diameter of skirt and shell approximately coincide and a generous knuckle radius is used (e.g., a 2:1 ellipsoidal head) the localized stresses are minimized and are not considered objectionable. In other cases an investigation of local effects may be warranted depending on the magnitude of the loading, location of skirt attachment, etc. and an additional thickness of vessel wall or compression rings may be necessary.

UA-190

Horizontal vessels may be supported by means of saddles or equivalent leg supports. For other than very small vessels, the bearing afforded by the saddles shall extend over at least one-third of the circumference of the shell.

UA-191

Supports should be as few in number as possible, preferably two in the length of the vessel. The vessel may be reinforced by stiffening rings at intermediate sections.[1]

UA-192

Large horizontal storage tanks for gases under pressure may be supported by any combination of hangers, with ring girders, stiffeners and such other reinforcement as may be necessary to prevent stresses in the shell in excess of those allowed by Par. UG-23 and to prevent excessive distortion due to the weight of the vessel when the internal pressure is near atmospheric.

[1] See Transactions ASCE, Volume 98–1931 "Design of Large Pipe Lines."

APPENDIX J

Capacity Conversions for Safety Valves

UA-230

The capacity of a safety or relief valve in terms of a gas or vapor other than the medium for which the valve was officially rated may be determined by application of the following formulas:[1]

For Steam:

$$W_s = 51.5KAP$$

For Air:

$$W_a = CKAP\sqrt{\frac{M}{T}}$$

$C = 356$
$M = 28.97$
$T = 520$ when W_a is the rated capacity

For any Gas or Vapor:

$$W = CKAP\sqrt{\frac{M}{T}}$$

where W_s = rated capacity, pounds of steam per hour
W_a = rated capacity, converted to pounds of air per hour at 60 degrees Fahrenheit, inlet temperature
W = flow of any gas or vapor, pounds per hour
C = constant for gas or vapor which is a function of the ratio of specific heats, $k = c_p/c_v$ (see Fig. UA-230)
K = coefficient of discharge (see Pars. UG-131 (d) and (e))
A = actual discharge area of the safety valve, square inches
P = (set pressure × 1.10) plus atmospheric pressure, pounds per square inch absolute
M = molecular weight
T = absolute temperature at inlet (degrees Fahrenheit plus 460)

These formulas may also be used when the required flow of any gas or vapor is known and it is necessary to compute the rated capacity of steam or air.

Molecular weights of some of the common gases and vapors are given in Table UA-230.

For hydrocarbon vapors, where the actual value of k is not known, the conservative value, $k = 1.001$ has been commonly used and the formula becomes,

$$W = 315\,KAP\sqrt{\frac{M}{T}}$$

When desired, as in the case of light hydrocarbons, the compressibility factor, Z, may be included in the formulas for gases and vapors as follows:

$$W = CKAP\sqrt{\frac{M}{ZT}}$$

[1] Knowing the official rating capacity of a safety valve which is stamped on the valve, it is possible to determine the overall value of KA in either of the following formulas in cases where the value of these individual terms is not known:

Official Rating in Steam: $KA = \frac{W_s}{51.5P}$

Official Rating in Air: $KA = \frac{W_a}{CP}\sqrt{\frac{T}{M}}$

This value for KA is then substituted in the above formulas to determine the capacity of the safety valve in terms of the new gas or vapor.

Example No. 1:

Given: A safety valve bears a certified capacity rating of 3020 lb of steam per hour for a pressure setting of 200 psi.

Problem: What is the relieving capacity of that valve in terms of air at 100 F for the same pressure setting?

Solution:

For steam:

$W_s = 51.5\,KAP$

$3020 = 51.5\,KAP$

$KAP = \frac{3020}{51.5} = 58.5$

For air:

$$W_a = CKAP\sqrt{\frac{M}{T}}$$

$$= 356\,KAP\sqrt{\frac{28.97}{460 + 100}}$$

$$= (356)\,(58.5)\sqrt{\frac{28.97}{560}}$$

$$= 4750 \text{ pounds per hour}$$

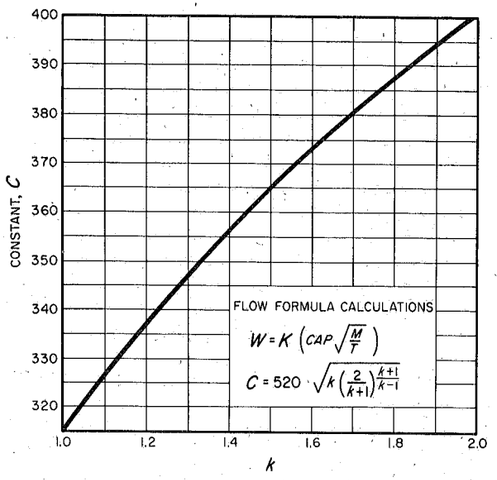

k	Constant C	k	Constant C	k	Constant C
1.00	315	1.26	343	1.52	366
1.02	318	1.28	345	1.54	368
1.04	320	1.30	347	1.56	369
1.06	322	1.32	349	1.58	371
1.08	324	1.34	351	1.60	372
1.10	327	1.36	352	1.62	374
1.12	329	1.38	354	1.64	376
1.14	331	1.40	356	1.66	377
1.16	333	1.42	358	1.68	379
1.18	335	1.44	359	1.70	380
1.20	337	1.46	361	2.00	400
1.22	339	1.48	363	2.20	412
1.24	341	1.50	364		

FIG. UA-230 CONSTANT C FOR GAS OR VAPOR RELATED TO RATIO OF SPECIFIC HEATS ($k = c_p/c_v$)

Example No. 2:

Given: It is required to relieve 5000 lb of propane per hour from a pressure vessel through a safety valve set to relieve at a pressure of P_s, pounds per square inch, and with an inlet temperature of 125 F.

Problem: What total capacity in pounds of steam per hour in safety valves must be furnished?

Solution:

For propane:

$$W = CKAP\sqrt{\frac{M}{T}}$$

Value of C is not definitely known. Use the conservative value, $C = 315$

$$5000 = 315\ KAP\sqrt{\frac{44.09}{460 + 125}}$$

$$KAP = 57.7$$

For steam:

$W_s = 51.5\ KAP = (51.5)\ (57.7)$
$= 2790$ pounds per hour set to relieve at P_s, pounds per square inch

Example No. 3:

Given: It is required to relieve 1000 lb of ammonia per hour from a pressure vessel at 150 F.

Problem: What is the required total capacity in pounds of steam per hour at the same pressure setting?

Solution:

For ammonia:

$$W = CKAP\sqrt{\frac{M}{T}}$$

Manufacturer and user agree to use $k = 1.33$

From Fig. UA-230, $C = 350$

$$1000 = 350\ KAP\sqrt{\frac{17.03}{460 + 150}}$$

$$KAP = 17.10$$

For steam:

$W_s = 51.5\ KAP = 51.5 \times 17.10$
$= 880$ pounds per hour

Example No. 4:

Given: A safety valve bearing a certified rating of 10,000 cu ft per minute of air at 60 F and 14.7 psia (atmospheric pressure).

Problem: What is the flow capacity of this safety valve in pounds of saturated steam per hour for the same pressure setting?

Solution:

For air:

Weight of dry air at 60 F and 14.7 psia is 0.0766 per cu ft.

$W_a = 10{,}000 \times 0.0766 \times 60 = 45{,}960$ lb per hour

$$45{,}960 = 356\ KAP\sqrt{\frac{28.97}{460 + 60}}$$

$$KAP = 546$$

For steam:

$W_s = 51.5\ KAP = (51.5)\ (546)$
$= 28200$ pounds per hour

TABLE UA-230
MOLECULAR WEIGHTS OF GASES AND VAPORS

Air	28.97	Freon 22	86.48
Acetylene	26.04	Freon 114	170.90
Ammonia	17.03	Hydrogen	2.02
Butane	58.12	Hydrogen Sulfide	34.08
Carbon Dioxide	44.01	Methane	16.04
Chlorine	70.91	Methyl Chloride	50.48
Ethane	30.07	Nitrogen	28.02
Ethylene	28.05	Oxygen	32.00
Freon 11	137.371	Propane	44.09
Freon 12	120.9	Sulfur Dioxide	64.06

APPENDIX K
Sectioning of Welded Joints

(A) ETCH TESTS

UA-250

(a) *Carbon and Low-Alloy Steels* Etching solutions suitable for carbon and low-alloy steels, together with directions for their use, are suggested as follows:

(1) *Hydrochloric Acid* Hydrochloric (muriatic) acid and water equal parts by volume. The solution should be kept at or near the boiling temperature during the etching process. The specimens are to be immersed in the solution for a sufficient period of time to reveal all lack of soundness that might exist at their cross-sectional surfaces.

(2) *Ammonium Persulfate* One part of ammonium persulfate to nine parts of water by weight. The solution should be used at room temperature and should be applied by vigorously rubbing the surface to be etched with a piece of cotton saturated with the solution. The etching process should be continued until there is a clear definition of the structure in the weld.

(3) *Iodine and Potassium Iodide* One part of powdered iodine (solid form), two parts of powdered potassium iodide, and ten parts of water, all by weight. The solution should be used at room temperature and brushed on the surface to be etched until there is a clear definition of outline of the weld.

(4) *Nitric Acid* One part of nitric acid and three parts of water by volume. (**Caution:** Always pour the acid into the water. Nitric acid causes bad stains and severe burns.) The solution may be used at room temperature and applied to the surface to be etched with a glass stirring rod. The specimens may also be placed in a boiling solution of the acid but the work should be done in a well-ventilated room. The etching process should be continued for a sufficient period of time to reveal all lack of soundness that might exist at the cross-sectional surfaces of the weld.

(b) The appearance of the etched specimens may be preserved by washing them in clear water, after etching, removing the excess water, immersing them in ethyl alcohol, and then drying them. The etched surface may then be preserved by coating it with a thin clear lacquer.

(c) *Aluminum Alloy* The following etching solution is suggested for revealing the macrostructure of welded aluminum alloy specimens:

Hydrochloric Acid (conc)	15 ml
Hydrofluoric Acid (48%)	10 ml
Water	85 ml

This solution is used at room temperature and

etching is accomplished by either swabbing or immersion of the specimen. The surface to be etched should be smoothed by filing or machining or by grinding on No. 180 Aloxite paper. With different alloys and tempers the etching period will vary from 15 seconds to several minutes and should be continued until the desired contrast is obtained.

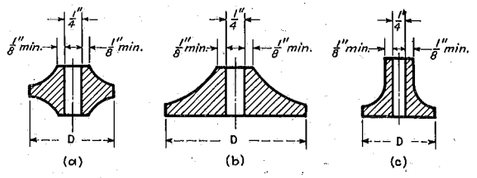

FIG. UA-251 SOME ACCEPTABLE TYPES OF FILLER PLUGS

(B) CLOSURE OF OPENINGS RESULTING FROM SECTIONING

UA-251

(a) Holes in welded joints left by the removal of trepanned plug specimens may be closed by any welding method approved by the authorized inspector. Some suggested methods for closing round plug openings by welding are as follows:

(1) Insert and weld in special plugs of which some acceptable types are shown in Fig. UA-251. Type (a) is adapted to welding from both sides and should be used wherever that method is practicable, and types (b) and (c) when access is possible only from one side. The diameter of the filler plug shall be such as to make a snug fit in the hole to be filled. Each layer of weld metal as deposited shall be thoroughly peened to reduce residual stresses. The ¼-in. hole in the center of the plugs shown in Fig. UA-251 may afterwards be closed by any reasonable method. Plain plugs without a hole may be used.

(2) For joints where the thickness of the thinner plate at the joint is not greater than one-third of the diameter of the hole, place a backing plate on the inside of the shell over the opening and fill the hole completely with weld metal applied from the outside of the shell. Rebuild fillet welds where cut.

(3) For joints where the thickness of the thinner plate at the joint is not less than one-third, nor greater than two-thirds the diameter of the hole, fill the hole completely with weld metal applied from both sides of the shell. Rebuild fillet welds where cut.

(4) For butt joints where the thickness of the thinner plate at the joint does not exceed ⅞ in., chip a groove on one side of the plate each way along the seam from the hole. The groove at the opening shall have sufficient width to provide a taper to the bottom of the hole, and the length of the groove on each side of the opening is to have a slope of approximately 1 to 3. Use a backing plate on the side opposite that on which the chipping is done or a thin disk (not over ⅛ in. thick) at the bottom of the hole and fill the groove and the hole with weld metal.

(5) For butt joints, and for plates of any thickness, chip a groove on both sides of the plate each way along the seam from the hole. The groove at the opening shall have sufficient width to provide a taper to the middle of the plate, and the length of the groove on each side of the opening is to have a slope of approximately 1 to 3. Place a thin disk (not over ⅛ in. thick) in the hole at the middle of the plate and fill the grooves and the hole on both sides with weld metal.

(b) The following is a suggested method for closing openings cut with a spherical saw: For butt-welded joints place a backing plate, where necessary, on the inside of the vessel shell over the opening. For lap-welded joints, a part of the parent plate remaining opposite the removed weld will usually serve as a backing plate. Fill the opening completely with the weld metal. Rebuild fillet welds where cut.

UA-252

Where gas welding is employed, the area surrounding the plugs shall be preheated prior to welding.

APPENDIX L
Examples Illustrating the Application of Code Formulas and Rules

VESSELS UNDER EXTERNAL PRESSURE

NOTE: There has been developed a new type of chart for use in the design of vessels under external pressure. The several charts covering various materials are reproduced in Appendix V.

The lines on the charts representing the values for D_o/t and the Sphere Line are the same on all of the charts. These lines are based on the proportion or dimensions of the vessel.

The lines sloping upward and to the right represent the mechanical properties of the materials at the temperature indicated on the lines. They are different for the various materials and are referred to as the Material Lines.

In the use of these charts interpolations may be made between the D_o/t lines and the material lines.

UA-270

(a) *Cylindrical Shell Under External Pressure* An example of the use of the rules in Par. UG-28(c)

Given: A fractionating tower 14 ft inside diameter by 21 ft long, bend line to bend line, fitted with fractionating trays, and operating under a vacuum at 750 F. The tower to be constructed of SA-285 Grade C carbon steel.

Design length (due to removable-tray spacing)	$L = 39$ in.
External design pressure	$P = 15$ psi
Inside diameter	$D = 168$ in.

Required: Shell thickness, t.

Solution:

Step 1:

Assume a thickness	$t = 0.3125$ in.
Assumed outside diameter	$D_o = 168.625$ in.
Call outside diameter	$D_o = 169$ in.

$$\frac{L}{D_o} = \frac{39}{169} = 0.231$$

$$\frac{D_o}{t} = \frac{169}{0.3125} = 540$$

Steps 2–5: Enter the chart in Fig. UCS-28.2 with $L/D_o = 0.231$, move horizontally to intersect the diagonal line for $D_o/t = 540$, then move vertically to the material line for 750 F (interpolated between the 700 F and 800 F material lines), and then move horizontally to the right-hand side of the chart and read $B = 6100$.

Step 6: The maximum allowable pressure for the assumed shell thickness of 0.3125 in. is:

$$P_a = \frac{B}{D_o/t} = \frac{6100}{540} = 11.30 \text{ psi}$$

Step 7: Since P_a is appreciably smaller than the design pressure P, it is necessary to assume a greater thickness for t and repeat the design procedure.

For a second trial (Step 1) assume $t = 0.375$ in. The ratio L/D_o does not change but D_o/t becomes:

$$\frac{D_o}{t} = \frac{169}{0.375} = 450$$

Proceeding as before (Steps 2–5) it is determined that $B = 7000$.

Step 6: The maximum allowable pressure for the assumed shell thickness of 0.375 in. is:

$$P_a = \frac{7000}{450} = 15.5 \text{ psi}$$

Step 7: Since P_a is greater than the design pressure P, the second assumed thickness should be satisfactory.

(b) *Spherical Shell Under External Pressure* An example of the use of the rules in Par. UG-28(d).

Given: A spherical vessel having an inside diameter of 72 in., made of an aluminum alloy conforming to Specification SB-209 Alloy 3003-0 to withstand an external pressure of 12 psi at 100 F.

Required: Shell thickness t_h.

Solution:

Step 1: Assume a shell thickness, $t_h = 0.50$ in.

$$\frac{L_1}{t_h} = \frac{36}{0.5} = 72$$

$$\frac{L_1}{100t_h} = \frac{36}{100 \times 0.5} = 0.72$$

Steps 2–5: Enter the chart in Fig. UNF-28.2 with $L_1/100t_h = 0.72$, move horizontally to intersect the Sphere Line, then move vertically to the material line for 100 F, and then move horizontally to the right-hand side of the chart and read $B = 1730$.

Step 6: The maximum allowable pressure for the assumed shell thickness of 0.5 in. is:

$$P_a = \frac{B}{L_1/t_h} = \frac{1730}{72} = 24.0 \text{ psi}$$

Step 7: Since P_a is appreciably greater than the design pressure P, it appears that a lesser thickness would be satisfactory.

For a second trial (Step 1) assume $t_h = 0.3125$ in., then:

$$\frac{L_1}{t_h} = \frac{36}{0.3125} = 115$$

$$\frac{L_1}{100t_h} = \frac{36}{100 \times 0.3125} = 1.15$$

Proceeding as before (Steps 2–5) it is determined that $B = 1600$.

Step 6: The maximum allowable pressure for the assumed shell thickness 0.3125 in. is:

$$P_a = \frac{B}{L_1/t_h} = \frac{1600}{115} = 13.9 \text{ psi}$$

Step 7: Since P_a is greater than the design pressure P, the second assumed thickness should be satisfactory.

UA-271 Maximum Out-of-Roundness Permitted for Vessels Under External Pressure

An example of the use of the rules in Par. UG-80(b).

Given: The same vessel considered in Par. UA-270(a).

Required: Maximum out-of-roundness permitted.

Solution: By the requirement in Par. UG-80(b)(1), the difference between the maximum diameter, D_{max} and the minimum diameter, D_{min} (see Fig. UG-80.2), in any plane perpendicular to the longitudinal axis of the vessel shall not exceed one per cent of the nominal diameter; that is, $0.01 \times 169 = 1.69$ in.

By the requirement in Par. UG-80(b)(2) the maximum deviation from a circular form for $D_o/t = 450$ and $L/D_o = 0.231$ as determined from Fig. UG-80.1 is:

$$e = 0.80t = 0.80 \times 0.375 = 0.300 \text{ in.}$$

From Fig. UG-29.2, for the same values of D_o/t and L/D_o the arc length is found to be $0.05D_o$. The reference chord then becomes:

$$2 \times 0.05 \times 169 = 16.90 \text{ in.}$$

Thus, in a chord length of 16.90 in., the maximum plus-or-minus deviation from the true circular form shall not exceed 0.30 in.

UA-272 Design of Circumferential Stiffening Ring for a Shell Under External Pressure

An example of the use of the rules in Par. UG-29(a).

Given: The same vessel considered in Par. UA-270(a).

Required: A structural steel member to act as a circular stiffening ring.

Solution:

Step 1: Select a 6-in. channel, 10.5 lb per ft for the stiffening ring.

$$A_s = 3.07 \text{ sq in.}$$

$$I = 15.1 \text{ in.}^4$$

$$B = \frac{PD_o}{t + \frac{A_s}{L_s}} = \frac{15 \times 169}{0.375 + \frac{3.07}{39}} = 5600$$

Steps 2–4: Enter the right-hand side of the chart in Fig. UCS-28.2 with the value of $B = 5600$, move horizontally to the material line for 750 F and then move vertically to the bottom of the chart and read $A = 0.00047$.

Step 5: Compute the value for I_s.

$$I_s = \frac{169^2 \times 39 \left\{0.375 + \frac{3.07}{39}\right\} 0.00047}{14} = 16.90 \text{ in.}^4$$

Step 6: The required I_s is greater than I for the section selected, therefore a selection of a heavier section must be made.

For a second trial (Step 1) select a 7-in. channel, 9.8 lb per ft.

$$A_s = 2.85 \text{ sq in.}$$

$$I = 21.1 \text{ in.}^4$$

$$B = \frac{15 \times 169}{0.375 + \frac{2.85}{39}} = 5650$$

Proceeding as before (Steps 2–4) it is determined that $A = 0.00047$.

Step 5:

$$I_s = \frac{169^2 \times 39 \left\{0.375 + \frac{2.85}{39}\right\} 0.00047}{14} = 16.70 \text{ in.}^4$$

Step 6: The required I_s is smaller than I for the second section selected; therefore it should be satisfactory.

UA-274

(a) *Cylindrical Shell Under Internal Pressure with Supplementary Loading* An example of the use of the rules in Par. UG-27(c).

Given: A packed column 24 in. inside diameter and 43 ft long, bend line to bend line, operating under 200 psi internal at 212 F with a longitudinal bending moment of 665,000 in -lb. The column is to be constructed of SA-285 Grade C carbon steel. Longitudinal joint efficiency $E = 0.85$. Circumferential joint efficiency, $E = 0.80$.

Required: Shell thickness, t, required with no longitudinal stiffeners.

Solution:

Minimum thickness due to pressure, circumferential stress governing

$$t = \frac{PR}{SE - 0.6P}$$

$$= \frac{200 \times 12}{13{,}750 \times 0.85 - (0.6 \times 200)} = 0.207 \text{ in.}$$

Thickness due to pressure, longitudinal stress governing

$$= \frac{PR}{2SE + 0.4P}$$

$$= \frac{200 \times 12}{2 \times 13{,}750 \times 0.80 + (0.4 \times 200)} = 0.109 \text{ in.}$$

Thickness due to longitudinal bending moment, assuming I/C for thin cylinder $= \pi R^2 t$

$$t = \frac{M}{\pi R^2 SE}$$

$$= \frac{665{,}000}{\pi \times 12^2 \times 13{,}750 \times 0.80} = 0.134 \text{ in.}$$

Total required thickness, longitudinal stress governing

$$t = 0.109 + 0.134 = 0.243 \text{ in.}$$

Since 0.243 in., required thickness when longitudinal stress governs, is greater than 0.207 in. required thickness when circumferential stress governs, the minimum shell thickness is 0.243 in.

(b) *Cylindrical Shell Under Internal Pressure With Supplementary Loading.* An example of the use of the rules in Par. UG-27(c).

Given: Same vessel considered in Par. UA-274-(a) with an actual thickness of $\frac{5}{16}$ in.

Required: Maximum allowable working pressure, P.

Solution:

Maximum allowable working pressure, circumferential stress governing:

$$P = \frac{SEt}{R + 0.6t}$$

$$P = \frac{13{,}750 \times 0.85 \times 0.313}{12 + (0.6 \times 0.313)} = 300 \text{ psi}$$

Thickness available to support pressure, longitudinal stress governing

$$t = 0.313 - 0.134 = 0.179 \text{ in.}$$

(0.134 in. equals thickness required for longitudinal bending. See Par. UA-274(a)).

Maximum allowable working pressure, longitudinal stress governing

$$P = \frac{2SEt}{R - 0.4t}$$

$$P = \frac{2 \times 13{,}750 \times 0.80 \times 0.179}{12 - (0.4 \times 0.179)} = 330 \text{ psi}$$

Since 300 psi allowable pressure when circumferential stress governs, is less than 330 psi, allowable pressure when longitudinal stress governs, the maximum allowable working pressure for the vessel is 300 psi.

UA-276 Required Thickness for Formed Head With Pressure on the Convex Side

(a) *Ellipsoidal Head* An example of the use of the rules in Par. UG-33(d).

Given: The same vessel considered in Par. UA-270(a). The head to have a major-to-minor axis ratio of 2:1.

Required: Head thickness t_h.

Solution:

Equivalent spherical radius	$L_1 = K_1 D_o$
From Table UG-37, $(D/2h = 2)$	$K_1 = 0.90$
Outside diameter	$D_o = 169$ in.

$$L_1 = 0.90 \times 169 = 152.1 \text{ in.}$$

Step 1: Assume a head thickness t_h = 0.5625 in.

$$\frac{L_1}{100t_h} = \frac{152.1}{100 \times 0.5625} = 2.71$$

$$\frac{L_1}{t_h} = \frac{152.1}{0.5625} = 271$$

Steps 2–5: Enter the left-hand side of the chart in Fig. UCS-28.2 with the value for $L_1/100t_h = 2.71$, move horizontally to the Sphere Line, then move vertically to the material line for 750 F, and then move horizontally to the right-hand side of the chart and read B = 5100.

Step 6: The maximum allowable pressure for the assumed head thickness of 0.5625 in. is:

$$P_a = \frac{B}{L_1/t_h} = \frac{5100}{271} = 18.8 \text{ psi}$$

Step 7: Since P_a is greater than the design pressure P, the assumed thickness should be satisfactory.

(b) *Torispherical Head* An example of the use of the rules in Par. UG-33 (e).

Given: The same vessel considered in Par. UA-270 (a). The head to have a crown radius equal to the diameter of the vessel and a knuckle radius equal to 6 per cent of the vessel diameter.

Required: Head thickness, t_h

Solution:

Spherical radius $L_1 = D_0 = 169$ in.

Step 1: Assume a head thickness, t_h = 0.50 in.

$$\frac{L_1}{100t_h} = \frac{169}{100 \times 0.50} = 3.38$$

$$\frac{L_1}{t_h} = \frac{169}{0.50} = 338$$

Steps 2–5: Enter the left-hand side of the chart in Fig. UCS-28.2 with the value for $L_1/100t_h$ = 3.38, move horizontally to the Sphere Line, then move vertically to the material line for 750 F, and then move horizontally to the right-hand side of the chart and read B = 4300.

Step 6: The maximum allowable pressure for the assumed head thickness of 0.50 in. is:

$$P_a = \frac{B}{L_1/t_h} = \frac{4300}{338} = 12.7 \text{ psi}$$

Step 7: Since P_a is smaller than the design pressure P, it is necessary to assume a greater thickness t_h and repeat the design procedure.

For a second trial (Step 1) assume t_h = 0.5625 in.

$$\frac{L_1}{100t_h} = \frac{169}{100 \times 0.5625} = 3.00$$

$$\frac{L_1}{t_h} = \frac{169}{0.5625} = 300$$

Proceeding as before (Steps 2–5) it is determined that B = 4700.

Step 6: The maximum allowable pressure for the assumed head thickness of 0.5625 in. is:

$$P_a = \frac{B}{L_1/t_h} = \frac{4700}{300} = 15.7 \text{ psi}$$

Step 7: Since P_a is greater than the design pressure P, the second assumed thickness should be satisfactory.

(c) *Hemispherical Head* An example of the use of the rules in Par. UG-33 (c).

Given: The same vessel considered in Par. UA-270 (a). The head to have a hemispherical shape.

Required: Head thickness, t_h.

Solution:

Spherical radius $L_1 = D_0/2 = 84.5$ in.

Step 1: Assume a head thickness, t_h = 0.3125 in.

$$\frac{L_1}{100t_h} = \frac{84.5}{100 \times 0.3125} = 2.70$$

$$\frac{L_1}{t_h} = \frac{84.5}{0.3125} = 270$$

Steps 2–5: Enter the left-hand side of the chart in Fig. UCS-28.2 with the value for $L_1/100t_h$ = 2.70, move horizontally to the Sphere Line, then move vertically to the material line for 750 F, and then move horizontally to the right-hand side of the chart and read B = 5200.

Step 6: The maximum allowable pressure for the assumed head thickness of 0.3125 in. is:

$$P_a = \frac{B}{L_1/t_h} = \frac{5200}{270} = 19.3 \text{ psi}$$

Step 7: Since P_a is greater than the design pressure P, the assumed thickness should be satisfactory.

(d) *Conical Head* An example of the use of the rules in Par. UG-33 (f) (1).

Given: The same vessel considered in Par. UA-270 (a). The head to be of a conical shape with a 45-deg included (apex) angle. There are to be no stiffening rings in the head.

Required: Head thickness, t.

Solution:

Outside diameter D_0 = 169 in.
One-half the included angle α = 22½ deg

Length $L = \frac{D_0/2}{\tan \alpha} = \frac{84.5}{0.4142} = 204$ in.

Step 1: Assume a head thickness, t = 1.0 in.

$$\frac{L}{D_0} = \frac{204}{169} = 1.21$$

$$\frac{D_0}{t} = \frac{169}{1} = 169$$

Steps 2–5: Enter the chart in Fig. UCS-28.2 with L/D_0 = 1.21, move horizontally to intersect the diagonal line for D_0/t = 169, then move vertically to the material line for 750 F, and then move horizontally to the right-hand side of the chart and read B = 6200.

Step 6: The maximum allowable pressure for the assumed cone thickness of 1.0 in. is:

$$P_a = \frac{B}{D_0/t} = \frac{6200}{169} = 36.7 \text{ psi}$$

Step 7: Since P_a is appreciably greater than the design pressure P, a lesser thickness t may be selected.

For a second trial (Step 1) assume t = 0.75 in. The ratio L/D_0 does not change but D_0/t becomes:

$$\frac{D_0}{t} = \frac{169}{0.75} = 225$$

Proceeding as before (Steps 2–5) it is determined that B = 4100.

Step 6: The maximum allowable pressure for the assumed cone thickness of 0.75 in. is:

$$P_a = \frac{B}{D_0/t} = \frac{4100}{225} = 18.2 \text{ psi}$$

Step 7: Since P_a is greater than the design pressure P, the second assumed thickness should be satisfactory.

OPENINGS AND REINFORCEMENTS

UA-280 Welded Connections

The symbols used in this paragraph are defined as follows:

A = total cross-sectional area of reinforcement required in the plane under consideration, square inches (see Fig. UA-280 and Par. UG-37);

A_1 = area in excess thickness in the vessel wall available for reinforcement, square inches (see Fig. UA-280 and Par. UG-40);

A_2 = area in excess thickness in the nozzle wall available for reinforcement, square inches (see Fig. UA-280 and Par. UG-40);

A_3 = area available for reinforcement when the nozzle wall extends inside the vessel wall, square inches (see Fig. UA-280 and Par. UG-40);

A_4 = cross sectional area of welds available for reinforcement, square inches (see Fig. UA-280 and Par. UG-40);

A_5 = cross sectional area of material added as reinforcement, square inches (see Fig. UA-280 and Pars. UG-40 and Pars UG-41);

c = corrosion allowance, inches;

D_p = outside diameter of reinforcing element, inches (actual size of reinforcing element may exceed the limits of available reinforcement established by Par. UG-40; however, credit cannot be taken for any material outside these limits);

d = diameter in the plane under consideration of the finished opening in its corroded condition, inches (see Par. UG-37 (b) and Fig. UW-16.1);

E = 1 (see definitions for t_r and t_{rn});

E_1 = 1 when an opening is in the solid plate or when the opening passes through a circumferential joint in a shell or cone (exclusive of head-to-shell joints):
or
E_1 = the joint efficiency obtained from Table UW-12 when any part of the opening passes through any other welded joint;

F = a correction factor which compensates for the variation in pressure stresses on different planes with respect to the axis of a vessel. A value of 1.00 shall be used for all configurations except that Fig. UG-37 may be used for integrally reinforced openings in cylindrical shells and cones.

h = distance nozzle projects beyond the inner or outer surface of the vessel wall, before corrosion allowance is added, inches (the extension of the nozzle beyond the inside or outside surface of the vessel wall is not limited; however, for reinforcement calculations the dimension shall not exceed the smaller of 2.5t or 2.5 t_n without a reinforcing element and the smaller of 2.5 t or 2.5t_n + t_e with a reinforcing element);

P = design pressure, pounds per square inch

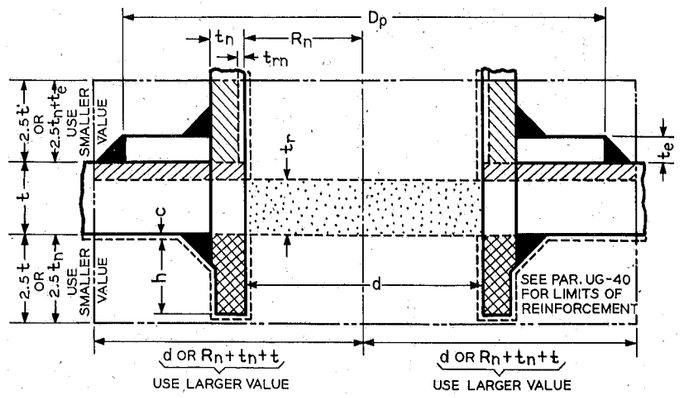

WITHOUT REINFORCING ELEMENT

$= A = d \times t_r \times F$

$= A_1 \begin{cases} = (E_1 t - F t_r)(d - R_n)\,2 = (E_1 t - F t_r)\,d \\ \text{or} \\ = (E_1 t - F t_r)(R_n + t_n + t - R_n)\,2 = (E_1 t - F t_r)(t_n + t)\,2 \end{cases}$

Area of reinforcement required.

(1a) Larger value is area of shell
(1b) available for reinforcement.

$= A_2 \begin{cases} = (t_n - t_{rn})\,2.5\,t \times 2 = (t_n - t_{rn})\,5t \\ \text{or} \\ = (t_n - t_{rn})\,2.5t_n \times 2 = (t_n - t_{rn})\,5t_n \end{cases}$

(2a) Smaller value is area of
(2b) nozzle wall available for reinforcement.

$= A_3 = (t_n - c)\,h \times 2 = (t_n - c)\,2h$*

$= A_4$ = Area of welds

If $A_1 + A_2 + A_3 + A_4 \geq A$ Opening is adequately reinforced.

If $A_1 + A_2 + A_3 + A_4 < A$ The difference must be supplied by reinforcing element or otherwise.

WITH REINFORCING ELEMENT

A, A_1, A_3, A_4, same as without reinforcing element.
With a reinforcing element, $2.5\,t_n$ is measured from the top surface of the reinforcing element.
A_2 becomes the smaller of $(t_n - t_{rn})\,5t$ or $(t_n - t_{rn})\,(2.5t_n + t_e)\,2$.
Area of reinforcing element $= (D_p - d - 2t_n)\,t_e = A_5$.
If $A_1 + A_2 + A_3 + A_4 + A_5 \geq A$ opening is adequately reinforced.

*The nozzle projection will not corrode back of any attaching fillet, hence the term $(t_n - c)$ is slightly conservative.

FIG. UA-280 EXAMPLE OF A REINFORCED OPENING
(This figure illustrates a common nozzle configuration and is not intended to prohibit other configurations permitted by the Code.)

(or maximum allowable working pressure for existing pressure vessels);

R = inside radius of the shell course under consideration, before corrosion allowance is added, inches;

R_n = inside radius of the nozzle under consideration, before corrosion allowance is added, inches;

S = allowable stress value as given in the applicable part of Subsection C, pounds per square inch; except vessels designed under Par. UW-12(c) and Column (c) of Table UW-12 must have the applicable stress value multiplied by 0.8;

t = nominal thickness of the vessel wall, less corrosion allowance, inches;

t_r = required thickness of a seamless shell or head as defined in Par. UG-37, inches;

t_n = nominal thickness of nozzle wall, less corrosion allowance, inches;

t_{rn} = required thickness of a seamless nozzle wall, inches

t_c = weld dimensions (see Fig. UW-16.1 and Par. UW-16);

$t_{\min}$ = weld dimensions (see Fig. UW-16.1 and Par. UW-16);

t_w = weld dimensions (see Fig. UW-16.1 and Par. UW-16);

t_e = Thickness or height of reinforcing element, inches. (See Pars. UG-40 and UG-41 and Fig. UW-16.1);

W = total load to be carried by attachment welds, pounds (see Par. UG-41);

π = 3.1416.

NOTE: In the examples which follow the calculations have been carried out in detail to assist in the following of the procedure; however, slide rule accuracy is acceptable for design purposes.

Also, F has been taken as 1 for all planes through openings in cylindrical shells although Fig. UG-37 permits smaller values of a magnitude dependent upon the plane under consideration.

Example 1

A 4-in. ID, ¾-in. wall, nozzle conforming to Specification SA-181, Grade I, is attached by welding to a vessel that has an inside diameter of 30 in. and a shell thickness of ⅜ in. The shell material conforms to Specification SA-285, Grade C. The vessel operates at 250 pounds per square inch and 150 F. There is no allowance for corrosion. Spot examination requirements of Par. UW-52 are to be met. The opening does not pass through the main seams. Check the construction for full-penetration groove-weld and for the ⅜-in. fillet cover-weld shown in Fig. UA-280.1.

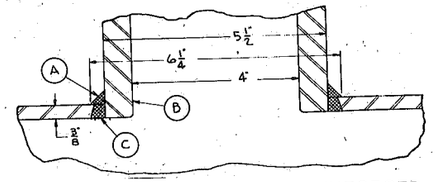

FIG. UA-280.1 EXAMPLE OF REINFORCED OPENING

Wall thicknesses required

Shell $t_r = \dfrac{PR}{SE - 0.6P}$

$= \dfrac{250 \times 15}{13{,}750 \times 1.0 - 0.6 \times 250}$

$= 0.276$ in.

Nozzle $t_{rn} = \dfrac{PR_n}{SE - 0.6P}$

$= \dfrac{250 \times 2}{15{,}000 \times 1.0 - 0.6 \times 250}$

$= 0.034$ in.

Size of weld required (Par. UW-16(d), Fig. UW-16.1(c)

t_c = not less than the smaller of ¼ in. or $0.7t_{\min}$
$= 0.7 \times 0.75$ or 0.7×0.375
0.263 in.; therefore throat must be at least 0.25 in.
$= 0.7 \times$ weld size
$= 0.7 \times 0.375$
$= 0.263$ (exist)
Cover-weld satisfactory

Area of reinforcement required
$A = d \times t_r \times F$
$= 4 \times 0.276 \times 1$
$= 1.104$ 1.104 sq in.

Area of reinforcement available
A_1 = larger of following
$= (E_1 t - F t_r)\,d$
$= (1 \times 0.375 - 1 \times 0.276)\,4$
$= 0.396$ 0.396 sq in.
or
$= (E_1 T - F t_r)(t_n + t)\,2$
$= (1 \times 0.375 - 1 \times 0.276)(0.75 + 0.375)\,2$
$= 0.223$
A_2 = smaller of following
$= (t_n - t_{rn})\,5t$
$= (0.75 - 0.034)(5)(0.375)$
$= 1.342$ 1.342 sq in.
or
$= (t_n - t_{rn})\,5t_n$
$= (0.75 - 0.034)(5)(0.75)$
$= 2.685$
$A_4 = 2 \times 0.5 \times 0.375^2$
$= 0.141$ 0.141 sq in.

Area provided by $A_1 + A_2 + A_4 = 1.879$ sq in.

This is greater than the required area so a reinforcing element is not needed

Load to be carried by welds (Par. UG-41 (b) (2))

$W = (A - A_1) S$

$= (1.104 - 0.396)\,13{,}750 = 9{,}735$ lb

Unit Stresses (Par. UW-15 (b))

Fillet-weld shear $= 0.49 \times 13{,}750$
$= 6{,}738$ psi

Groove-weld tension $= 0.74 \times 13{,}750$
$= 10{,}175$ psi

Nozzle-wall shear $= 0.70 \times 13{,}750$[1]
$= 9{,}625$ psi

Strength of connection elements

(A) Fillet-weld shear
$= \pi/2 \times$ nozzle OD $\times$ weld leg $\times$ 6,738
$= 1.57 \times 5.5 \times 0.375 \times 6{,}738$
$= 21{,}818$ lb

(B) Nozzle-wall shear
$= \pi/2 \times$ mean nozzle diam $\times\, t_n \times 9{,}625$
$= 1.57 \times 4.75 \times 0.75 \times 9{,}625$
$= 53{,}834$ lb

(C) Groove-weld tension
$= \pi/2 \times$ nozzle OD $\times$ weld leg $\times$ 10,175
$= 1.57 \times 5.5 \times 0.375 \times 10{,}175$
$= 32{,}948$ lb

Possible paths of failure

(1) Through (A) & (B)
21,818 + 53,834 = 75,652 lb

(2) Through (A) & (C)
21,818 + 32,948 = 54,766 lb

Both paths are stronger than the required strength of 9,735 lb.

Example 2

A 11¼-in. ID, ½-in. wall, nozzle conforming to Specification SA-105, Grade I, is attached by welding to a vessel that has an inside diameter of 60 in. Shell thickness ¾ in.; reinforcing element thickness ⅜ in. Shell plate to conform to Specification SA-201, Grade B, and the reinforcing element to conform to Specification SA-285, Grade C. Spot examination requirements of Par. UW-52 are to be met and the opening does not pass through a main seam. The vessel is to operate at 250 psi and 700 F. There is to be no allowance for corrosion. Check the adequacy of the reinforcing element and the attachment welds shown in Fig. UA-280.2.

[1] No credit can be taken for additional strength of any reinforcement having a higher allowable stress value than the material in the vessel wall (see Par. UG-41 (a)).

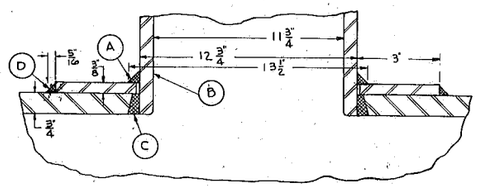

FIG. UA-280.2 EXAMPLE OF REINFORCED OPENING

Wall thicknesses required

Shell $t_r = \dfrac{PR}{SE - 0.6P}$

$= \dfrac{250 \times 30}{14{,}350 \times 1.0 - 0.6 \times 250}$

$= 0.529$ in.

Nozzle $t_{rn} = \dfrac{PR_n}{SE - 0.6 \times P}$

$= \dfrac{250 \times 5.875}{14{,}350 \times 1.0 - 0.6 \times 250}$

$= 0.104$ in.

Size of weld required (Par. UW-16 (e), Fig. UW-16.1 (m))

Inner (reinforcing element) fillet weld

$t_w = 0.7\, t_{\min}$
$= 0.7 \times 0.375$
$= 0.263$ in. (min. throat required)

$t_w = 0.7 \times$ weld size
$= \dfrac{0.7\,(13.5 - 12.75)}{2}$
$= 0.263$ in. (exist)

Outer (reinforcing element) fillet weld

Throat $= \frac{1}{2}\, t_{\min}$
$= 0.5 \times 0.375$
$= 0.1875$ (min. throat required)
$= 0.7 \times$ weld size
$= 0.7 \times 0.3125$
$= 0.219$ (exist)

Weld sizes are satisfactory

Area of reinforcement required

$A = d \times t_r \times F$
$= 11.75 \times 0.529 \times 1$
$= 6.216$ 6.216 sq in.

Area of reinforcement available

A_1 = larger of following
$= (E_1 t - F t_r)\, d$
$= (1 \times 0.75 - 1 \times 0.529)\, 11.75$
$= 2.596$ 2.596 sq in.

or

$= (E_1 t - F t_r)\,(t_n + t)\, 2$
$= (1 \times 0.75 - 1 \times 0.529)\,(0.5 + 0.75)\, 2$
$= 0.552$

A_2 = smaller of the following
$= (t_n - t_{rn})\, 5t$
$= (0.5 - 0.104)\,(5)\,(0.75)$
$= 1.485$

or

$= (t_n - t_{rn})\,(2.5 t_n + t_e)\, 2$
$= (0.5 - 0.104)\,(2.5 \times 0.5 + 0.375)\, 2$
$= 1.287$ 1.287 sq in.

$A_4 = 2 \times 0.5\,(0.3125^2 + 0.375^2)$
$= 0.238$ 0.238 sq in.

Area provided by $A_1 + A_2 + A_4$ = 4.121 sq in.

$A_5 = (D_p - d - 2t_n)\, t_e$
$= (18.75 - 11.75 - 1.0)\, 0.375 \times \dfrac{13{,}250}{14{,}350}$

$= 2.078$ 2.078 sq in.

Total area available 6.199 sq in.

This is less than area required; therefore the opening is not adequately reinforced.

The size of the reinforcing element must be increased.

$A_1 + A_2 + A_4 =$ 4.121 sq in.

$A_5 = (19.00 - 11.75 - 1.0)\, 0.375 \times \dfrac{13{,}250}{14{,}350}$

$A_5 = 2.164$ 2.164 sq in.

Total area available by increasing reinforcing element OD ¼ in. 6.285 sq in.

Load to be carried by welds (Par. UG-41 (b) (2))

$W = (A - A_1) S$
$= (6.216 - 2.596)\, 14{,}350$ 51,947 lb

Unit stresses (Par. UW-15 (b))

Outer Fillet-weld shear
$= 0.49 \times 13{,}250 = 6{,}493$ psi

Inner Fillet-weld shear
$= 0.49 \times 13{,}250 = 6{,}493$ psi

Groove-weld tension
$= 0.74 \times 14{,}350 = 10{,}619$ psi

Nozzle-wall shear
$= 0.70 \times 14{,}350 = 10{,}045$ psi

Strength of connection elements

(A) Inner fillet-weld shear
$= \pi/2 \times$ nozzle OD $\times$ weld leg $\times$ 6,493
$= 1.57 \times 12.75 \times 0.375 \times 6{,}493$
$= 48{,}742$ lb

(B) Nozzle-wall shear
$= \pi/2 \times$ mean nozzle diam $\times\, t_n \times 10{,}045$
$= 1.57 \times 12.25 \times 0.5 \times 10{,}045$
$= 96{,}595$ lb

(C) Groove-weld tension
$= \pi/2 \times$ nozzle OD $\times\, t \times 10{,}619$
$= 1.57 \times 12.75 \times 0.75 \times 10{,}619$
$= 159{,}424$ lb

(D) Outer fillet-weld shear
$= \pi/2 \times$ reinforcing element OD $\times$ weld leg $\times$ 6,493
$= 1.57 \times 19.00 \times 0.312 \times 6{,}493$
$= 60{,}430$ lb

Possible paths of failure

(1) Through (B) and (D)
96,595 + 60,430 = 157,025 lb

(2) Through (A) and (C)
48,742 + 159,424 = 208,166 lb

(3) Through (C) and (D)
159,424 + 60,430 = 219,854 lb

All paths are stronger than the required strength of 51,947 lb.

The design strength of the outer fillet weld attaching the reinforcing element to the shell is 60,430 lb or greater than the reinforcing element strength of $2.164 \times 13{,}250 = 28{,}673$ lb.

Example 3

An 11¼-in. ID, ½-in. wall, nozzle conforming to Specification SA-105, Grade I, is attached by welding to a vessel that has an inside diameter of 60 in. The nozzle passes through the longitudinal joint of the vessel. Spot examination requirements of Par. UW-52 are to be met. The ¾-in. thick shell plate and ½-in. thick reinforcing element to conform to Specification SA-201, Grade B. The vessel is to operate at 250 psi and 700 F. There is to be no allowance for corrosion. Check the adequacy of the reinforcing element and the attachment welds shown in Fig. UA-280.3.

Wall thicknesses required (from Example 2)

$t_r = 0.529$ in. $t_{rn} = 0.104$ in.

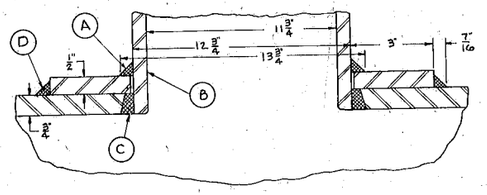

FIG. UA-280.3 EXAMPLE OF REINFORCED OPENING

Size of welds required (Par. UW-16(e), Fig. UW-16.1(m))

Inner (reinforcing element) fillet weld

$t_w = 0.7\,t_{min}$
$= 0.7 \times 0.5$
$= 0.35$ in. (minimum throat required)

$t_w = 0.7 \times$ weld size
$= \frac{0.7\,(13.75 - 12.75)}{2}$
$= 0.35$ in. (exist)

Outer (reinforcing element) fillet weld

Throat $= \frac{1}{2}\,t_{min}$
$= 0.5 \times 0.5$
$= 0.25$ in. (minimum throat required)

Throat $= 0.7 \times$ weld size
$= 0.7 \times 0.4375$
$= 0.306$ in. (exist)

The weld sizes used are satisfactory.

Area of reinforcement required

$A = d \times t_r \times F$
$= 11.75 \times 0.529 \times 1$
$= 6.216$ — 6.216 sq in.

Area of reinforcement available

A_1 = larger of following
$= (E_1 t - F t_r)\,d$
$= (0.85 \times 0.75 - 1 \times 0.529)\,11.75$
$= 1.274$ — 1.274 sq in.

or

$= 3E_1 t - F t_r)\,(t_n + t)\,2$
$= (0.85 \times 0.75 - 1 \times 0.529)\,(0.5 + 0.75)\,2$
$= 0.271$

A_2 = smaller of following
$= (t_n - t_{rn})\,5t$
$= (0.5 - 0.104)\,(5)\,(0.75)$
$= 1.485$

or

$= (t_n - t_{rn})\,(2.5\,t_n + t_e)\,2$
$= (0.5 - 0.104)\,(2.5 \times 0.5 + 0.5)\,2$
$= 1.386$ — 1.386 sq in.

$A_4 = 2 \times 0.5\,(0.4375^2 + 0.5^2)$
$= 0.441$ — 0.441 sq in.

Area provided by $A_1 + A_2 + A_4$ = 3.101 sq in.

$A_5 = (D_p - d - 2t_n)\,t_e$
$= (18.75 - 11.75 - 1)\,0.5$
$= 3.0$ — 3.0 sq in.

Total area available — 6.101 sq in.

Opening is not adequately reinforced.

Size of reinforcing element must be increased

$A_1 + A_2 + A_4 =$ — 3.101 sq in.
$A_5 = (19.00 - 11.75 - 1)\,0.5$ — 3.125 sq in.

Total area available by increasing OD of reinforcing element ¼ in. = 6.226 sq in.

Load to be carried by welds (Par. UG-41(b)(2))

$W = (A - A_1)\,S$
$= (6.216 - 1.274)\,14{,}350 = 70{,}917$ lb

Unit Stresses (Par. UW-15(b))

Fillet-weld shear $= 0.49 \times 14{,}350$
$= 7{,}031$ psi

Groove-weld tension $= 0.74 \times 14{,}350$
$= 10{,}619$ psi

Nozzle-wall shear $= 0.70 \times 14{,}350$
$= 10{,}045$ psi

Strength of connection elements

(A) Inner (reinforcing element) fillet-weld shear
$= \pi/2 \times$ nozzle OD $\times$ weld leg $\times$ 7,031
$= 1.57 \times 12.75 \times 0.5 \times 7{,}031$
$= 70{,}371$ lb

(B) Nozzle wall shear
$= \pi/2 \times$ mean nozzle diam $\times\, t_n \times 10{,}045$
$= 1.57 \times 12.25 \times 0.5 \times 10{,}045$
$= 96{,}595$ lb

(C) Groove weld tension
$= \pi/2 \times$ nozzle OD $\times\, t \times 10{,}619$
$= 1.57 \times 12.75 \times 0.75 \times 10{,}619$
$= 159{,}424$ lb

(D) Outer (reinforcing element) fillet weld
$= \pi/2 \times$ reinforcing element OD $\times$ weld leg $\times$ 7,031
$= 1.57 \times 19.0 \times 0.437 \times 7{,}031$
$= 91{,}654$ lb

Possible paths of failure

(1) Through (B) and (D)
$96{,}595 \times 91{,}654 = 188{,}249$ lb

(2) Through (A) and (C)
$70{,}371 + 159{,}424 = 229{,}795$ lb

(3) Through (C) and (D)
$159{,}424 + 91{,}654 = 251{,}078$ lb

All are stronger than the required strength of 70,917 lb.

Example 4

A 16-in. ID weld neck, $1^{11}/_{16}$-in. wall, conforming to Specification SA-105, Grade II, is attached to a vessel that has an inside diameter of 96 in. and a shell thickness of 2 in. The shell material conforms to Specification SA-516 Grade 65. The vessel is designed to operate at 425 psi and 800 F. An allowance of $^{1}/_{16}$ in. for corrosion is included in the shell and nozzle thickness. Main seams in the vessel are to be radiographed. The opening does not pass through a main seam. Check the opening for reinforcement and check the adequacy of the attachment welds shown in Fig. UA-280.4.

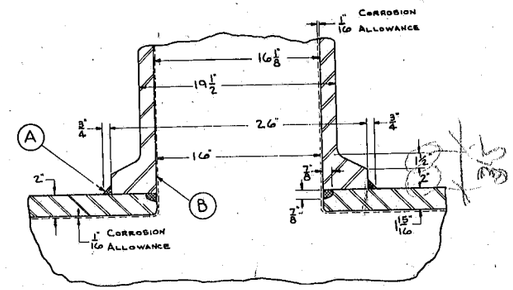

FIG. UA-280.4 EXAMPLE OF REINFORCED OPENING

Wall thicknesses required

Shell $t_r = \frac{PR}{SE - 0.6P}$
$= \frac{425\,(48 + 0.0625)}{11{,}400 \times 1 - 0.6 \times 425}$
$= 1.833$ in.

Nozzle $t_{rn} = \frac{PR_n}{SE - 0.6\,P}$
$= \frac{425\,(8 + 0.0625)}{12{,}000 \times 1 - 0.6 \times 425}$
$= 0.292$ in.

Size of weld required (Par. UW-16(f), Fig. UW-16.1(r-1))

Inner perimeter weld

$t_w = 0.7\,t_{min}$
$= 0.7 \times 0.75$
$= 0.525$ in. (required)

t_w of 0.875 in. exist (see Fig. UA-280.4)

Outer perimeter weld

Throat $= 1/2\,t_{min}$
$= 0.5 \times 0.75$
$= 0.375$ in. (minimum throat required)

Throat $= 0.7 \times$ weld size $= 0.7 \times 0.75$
$= 0.525$ in. (exist)

The weld sizes are satisfactory.

Area of reinforcement required

$A = d \times t_r \times F$
$= 16.125 \times 1.833 \times 1$
$= 29.557$ — 29.557 sq in.

Area of reinforcement available

A_1 = larger of following
$= (E_1 t - F t_r)\,d$
$= (1.0 \times 1.937 - 1 \times 1.833)\,16.125$
$= 1.677$ — 1.677 sq in.

or

$= (E_1 t - F t_r)\,(t_n + t)\,2$
$= (1.0 \times 1.937 - 1 + 1.833)\,(1.687 + 1.937)\,2$
$= 0.753$

A_2 = smaller of following
$= (t_n - t_{rn})\,5t$
$= (1.687 - 0.292)\,(5)\,(1.937)$
$= 13.510$ — 13.510 sq in.

or

$= (t_n - t_{rn})\,(2.5\,t_n + t_e)\,2$
$= (1.687 - 0.292)\,(2.5 \times 1.687 + 3.5)\,2$
$= 21.531$

$A_4 = 2 \times 0.5 \times 0.75^2$
$= 0.562$ — 0.562 sq in.

Area provided by $A_1 + A_2 + A_4 =$ 15.749 sq in.

$A_5 = (D_p - d - 2t_n) \times$ average thickness of reinforcement[1]
$= (26.0 - 16.125 - 3.375)\,(2.75)$
$= 17.875$ — 17.875 sq in.

Total area available — 33.624 sq in.

This is greater than area required; therefore, the opening is adequately reinforced.

Load to be carried by welds (Par. UG-41(b)(2))

$W = (A - A_1)\,S$
$= (29{,}557 - 1{,}677)\,11{,}400$
$= 317{,}832$ lb

Unit stresses (Par. UW-15(b))

Fillet-weld shear $= 0.49 \times 11{,}400$
$= 5{,}586$ psi

Groove-weld shear $= 0.60 \times 11{,}400$
$= 6{,}840$ psi

Strength of connection elements

(A) Fillet-weld shear
$= \pi/2 \times$ nozzle OD $\times$ weld leg $\times$ 5,586
$= 1.57 \times 26.0 \times 0.75 \times 5{,}586$
$= 171{,}015$ lb

(B) Groove-weld shear
$= \pi/2 \times$ mean diam of weld $\times$ weld $t_w \times 6{,}840$
$= 1.57 \times 17.0 \times 0.875 \times 6{,}840$
$= 159{,}739$ lb

Connection elements (A) and (B) have a combined strength of

$171{,}015 + 159{,}739 = 330{,}754$ lb,

which exceeds the required strength of 317,832 lb.

[1] Average thickness of reinforcing element
$= \frac{3.5 + 2}{2}$
$= 2.75$

Example 5

A nozzle with an outside diameter of 16 in. is fabricated by welding from ¾-in. plate. It is attached by welding to a vessel that has an inside diameter of 83 in. and a shell thickness of 2 in. The vessel is designed to operate at a pressure of 500 psi at 400 F. The material in the shell and the nozzle conforms to Specification SA-285, Grade C. An allowance of ¼ in. for corrosion is included in the shell and nozzle thickness. The vessel main seams are to be radiographed. The nozzle does not pass through a main seam. Check the adequacy of the reinforcement and the attachment welds shown in Fig. UA-280.5.

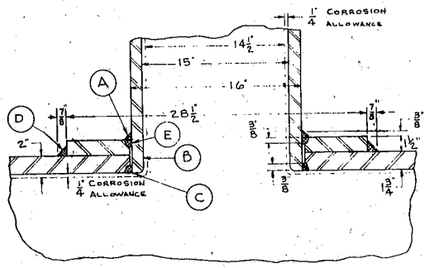

FIG. UA-280.5 EXAMPLE OF REINFORCED OPENING

Wall thickness required

Shell $t_r = \dfrac{PR}{SE - 0.6P}$

$= \dfrac{500\,(41.50 + 0.25)}{13{,}750 \times 1.0 - 0.6 \times 500}$

$= 1.553$ in.

Nozzle $t_{rn} = \dfrac{PR_n}{SE - 0.6P}$

$= \dfrac{500\,(7.25 + 0.25)}{13{,}750 \times 1.0 - 0.6 \times 500}$

$= 0.279$ in.

Size of weld required (Par. UW-16(e), Fig. UW-16.1(n))

Inner (reinforcing element) fillet weld

t_c = not less than the smaller of ¼ in. or $0.7\,t_{min}$

$= 0.7 \times 0.75$ or 0.7×0.5

$= 0.35$ in.; therefore throat must be at least 0.25 in.

$t_c = 0.7 \times$ weld size

$= 0.7 \times 0.375$

$= 0.263$ (exist)

Outer (reinforcing element) fillet weld

Throat $= \frac{1}{2}\,t_{min}$

$= 0.5 \times 0.75$

$= 0.375$ in. (minimum throat required)

Throat $= 0.7 \times$ weld size

$= 0.7 \times 0.875$

$= 0.612$ in. (exist)

Upper groove weld

$t_w = 0.7\,t_{min}$

$= 0.7 \times 0.5$

$= 0.35$ in. (required)

$t_w = 0.375$ in. (see Fig. UA-280.5)

Lower groove weld

$t_w = 0.7\,t_{min}$

$= 0.7 \times 0.5$

$= 0.35$ in. (required)

$t_w = 0.375$ in. (see Fig. UA-280.5)

The weld sizes used are satisfactory.

Area of reinforcement required

$A = d \times t_r \times F$

$= 15.0 \times 1.553 \times 1$

$= 23.295$ 23.295 sq in.

Area of reinforcement available

A_1 = larger of following

$= (E_1 t - F t_r)\,d$

$= (1 \times 1.75 - 1 \times 1.553)\,15$

$= 2.955$ 2.955 sq in.

or

$= (E_1 t - F t_r)\,(t_n + t)\,2$

$= (1 \times 1.75 - 1 \times 1.553)\,(0.5 + 1.75)\,2$

$= 0.8865$

A_2 = smaller of following

$= (t_n - t_{rn})\,5t$

$= (0.5 - 0.279)\,(5)\,(1.75)$

$= 1.933$

or

$= (t_n - t_{rn})\,(2.5t_n + t_e)\,2$

$= 1.215$ 1.215 sq in.

$A_4 = 2 \times 0.5\,(0.875^2 + 0.375^2)$

$= 0.906$ 0.906 sq in.

Area provided by $A_1 + A_2 + A_4 =$ 5.076 sq in.

$A_5 = (D_p - d - 2t_n)\,t_e$

$= (28.5 - 15 - 1)\,1.5$

$= 18.75$ 18.75 sq in.

Total area available 23.826 sq in.

This is greater than the required area; therefore, opening is adequately reinforced.

Load to be carried by welds (Par. UG-41(b)(2))

$W = (A - A_1)\,S$

$= (23.295 - 2.955)\,13{,}750$

$= 279{,}675$ lb

Load to be carried by welds (A), (C) and (E) (Par. UG-41(b)(1))

$W = (A_2 + 2t_n\,t)\,S$

$= (1.215 + 2 \times 0.5 \times 1.75)\,13{,}750$

$= 40{,}769$ lb

Unit stresses (Par. UW-15(b))

Fillet-weld shear $= 0.49 \times 13{,}750$

$= 6{,}737$ psi

Groove-weld tension $= 0.74 \times 13{,}750$

$= 10{,}175$ psi

Groove-weld shear $= 0.60 \times 13{,}750$

$= 8{,}250$ psi

Nozzle-wall shear $= 0.70 \times 13{,}750$

$= 9{,}625$ psi

Strength of connection elements

(A) Upper groove weld tension

$= \pi/2 \times$ nozzle OD $\times$ weld leg $\times$ 10,175

$= 1.57 \times 16.0 \times 0.375 \times 10{,}175$

$= 95{,}848$ lb

(B) Nozzle wall shear

$= \pi/2 \times$ mean nozzle diam $\times\, t_n \times 9{,}625$

$= 1.57 \times 15.5 \times 0.5 \times 9{,}625$

$= 117{,}112$ lb

(C) Lower groove weld tension

$= \pi/2 \times$ nozzle OD $\times$ weld leg $\times$ 10,175

$= 1.57 \times 16.0 \times 0.375 \times 10{,}175$

$= 95{,}848$ lb

(D) Outer (reinforcing element) fillet weld

$= \pi/2 \times$ reinforcing element OD $\times$ weld leg $\times$ 6,737

$= 1.57 \times 28.5 \times 0.875 \times 6{,}737$

$= 263{,}766$ lb

(E) Upper fillet or cover-weld

$= \pi/2 \times$ nozzle OD $\times$ weld leg $\times$ 6,737

$= 1.57 \times 16.0 \times 0.375 \times 6{,}737$

$= 63{,}462$ lb

Possible paths of failure

(1) Through (B) and (D)

$117{,}122 + 263{,}766 = 380{,}878$ lb

(2) Through (C) and (D)

$95{,}848 + 263{,}766 = 359{,}614$ lb

(3) Through (A), (C) and (E)

$95{,}848 + 95{,}848 + 63{,}462 = 255{,}158$ lb

Paths (1) and (2) are stronger than the total strength of 279,675 lb. Path (3) is stronger than strength of 40,769 lb. The outer fillet weld strength of 263,766 lb is greater than the reinforcing element strength of $18.75 \times 13{,}750 = 257{,}813$ lb.

LIGAMENTS

UA-290 Efficiency of Ligaments

Example 1:

Given: Pitch of tube holes in a cylindrical shell, as shown in Fig. UG-53.1, = 5¼ in.; diameter of tube = 3¼ in.; diameter of tube holes = 3$^{3}/_{32}$ in.

Required: Efficiency of the ligament.

Solution: $\dfrac{p - d}{p} = \dfrac{5.25 - 3.281}{5.25}$

$= 0.375$ or 37.5 per cent.

Example 2:

Given: Spacing of tube holes in a cylindrical shell as shown in Fig. UG-53.2. Diameter of tube holes = 3$^{3}/_{32}$ in.

Required: Efficiency of the ligament.

Solution: $\dfrac{p - nd}{p} = \dfrac{12 - 2 \times 3.281}{12}$

$= 0.453$ or 45.3 per cent.

Example 3:

Given: Spacing of tube holes in a cylindrical shell as shown in Fig. UG-53.3. Diameter of tube holes = 3$^{3}/_{32}$ in.

Required: Efficiency of the ligament.

Solution: $\dfrac{p - nd}{p} = \dfrac{29.25 - 5 \times 3.281}{29.25}$

$= 0.439$ or 43.9 per cent.

Example 4:

Given: Diagonal pitch of tube holes in a cylindrical shell, as shown in Fig. UG-53.4 = 6.42 in. Diameter of holes = 4$^{1}/_{32}$ in. Longitudinal pitch of tube holes = 11½ in. = $p = p_1$.

Required: Diagonal ligament efficiency.

Solution: Longitudinal efficiency $= \dfrac{p - d}{p}$

$= \dfrac{11.5 - 4.031}{11.5} = 0.649$ or 64.9 per cent.

$\dfrac{p'}{p_1} = \dfrac{6.42}{11.5} = 0.558$

From the diagram in Fig. UG-53.5, the efficiency is 33.3 per cent.

Example 5:

Given: Diagonal pitch of tube holes = 6 $^{35}/_{64}$ in. Diameter of tube holes = 4 $^{1}/_{64}$ in. Longitudinal pitch of tube holes = 6½ in. = $p = p_1$.

$\dfrac{p'}{p} = \dfrac{6.547}{6.5} = 1.006$

Longitudinal efficiency $= \dfrac{p - d}{p} = \dfrac{6.5 - 4.0156}{6.5}$

$= 0.3825$ or 38.25 per cent.

From the diagram in Fig. UG-53.5, it can be seen that the vertical line representing the longitudinal efficiency intersects the p'/p_1 value of 1.006 above the curve representing equal longitudinal and diagonal efficiencies. Thus it can be seen that the longitudinal efficiency is less and is the value to be used.

APPENDIX M
Installation and Operation

UA-350 Introduction

(a) The rules in this Appendix are for general information only, because they pertain to the installation and operation of pressure vessels, which are the prerogative and responsibility of the law enforcement authorities in those states and municipalities which have made provision for the enforcement of Section VIII of the Boiler and Pressure Vessel Code.

(b) It is permissive to use any departures suggested herein from provisions in the mandatory parts of this Division of Section VIII when granted by the authority having legal jurisdiction over the installation of unfired pressure vessels.

UA-351 Corrosion

(a) Vessels subject to external corrosion shall be so installed that there is sufficient access to all parts of the exterior to permit proper inspection of the exterior, unless adequate protection against corrosion is provided or unless the vessel is of such size and is so connected that it may readily be removed from its permanent location for inspection.

(b) Vessels having manholes, handholes, or cover plates to permit inspection of the interior shall be so installed that these openings are accessible.

(c) In vertical cylindrical vessels subject to corrosion, to insure complete drainage, the bottom head, if dished, should preferably be concave to pressure.

UA-352 Marking on the Vessel

The marking required by this Division shall be so located that it will be accessible after installation and when installed shall not be covered with insulation or other material that is not readily removable (see Par. UG-116(i)).

UA-353 Pressure-Relieving Safety Devices

The general provisions for the installation of pressure-relieving devices are fully covered in Par. UG-134. The following paragraphs contain details in arrangement of stop valves for shut-off control of safety pressure-relief devices which are sometimes necessary to the continuous operation of processing equipment of such a complex nature that the shut-down of any part of it is not feasible. There are also rules in regard to the design of discharge piping from safety and relief valves, which can only be general in nature because the design engineer must fit the arrangement and proportions of such a system to the particular requirements in the operation of the equipment involved.

UA-354 Stop Valves Between Pressure-Relieving Device and Vessel

(a) A vessel, in which pressure can be generated because of service conditions, may have a full-area stop valve between it and its pressure-relieving device for inspection and repair purposes only. When such a stop valve is provided, it shall be so arranged that it can be locked or sealed open, and it shall not be closed except by an authorized person who shall remain stationed there during that period of the vessel's operation within which the valve remains closed, and who shall again lock or seal the stop valve in the open position before leaving the station.

(b) A vessel or system (see Par. UG-132(c)) for which the pressure originates from an outside source exclusively may have individual pressure-relieving devices on each vessel, or connected to any point on the connecting piping, or on any one of the vessels to be protected. Under such an arrangement, there may be a stop valve between any vessel and the pressure-relieving devices, and this stop valve need not be locked open, provided it also closes off that vessel from the source of pressure.

UA-355 Stop Valves on the Discharge Side of a Pressure-Relieving Device (See Par. UG-134(e).)

A full-area stop valve may be placed on the discharge side of a pressure-relieving device when its discharge is connected to a common header with other discharge lines from other pressure-relieving devices on nearby vessels that are in operation, so that this stop valve when closed will prevent a discharge from any connected operating vessels from backing up beyond the valve so closed. Such a stop valve shall be so arranged that it can be locked or sealed in either the open or closed position, and it shall be locked or sealed in either position only by an authorized

person. When it is to be closed while the vessel is in operation, an authorized person shall be present, and he shall remain stationed there; he shall again lock or seal the stop valve in the open position before leaving the station. Under no condition should this valve be closed while the vessel is in operation except when a stop valve on the inlet side of the safety relieving device is installed and is first closed.

UA-356 Discharge Lines From Safety Devices

(a) Where it is feasible, the use of a short discharge pipe or vertical riser, connected through long-radius elbows from each individual device, blowing directly to the atmosphere, is recommended. Such discharge pipes shall be at least of the same size as the valve outlet. Where the nature of the discharge permits, telescopic (sometimes called "broken") discharge lines, whereby condensed vapor in the discharge line, or rain, is collected in a drip pan and piped to a drain, are recommended.[1]

(b) When discharge lines are long, or where outlets of two or more valves having set pressures within a comparable range are connected into a common line, the effect of the back pressure that may be developed therein when certain valves operate must be considered (see Par. UG-134(g)). The sizing of any section of a common-discharge header downstream from each of the two or more pressure-relieving devices that may reasonably be expected to discharge simultaneously shall be based on the total of their outlet areas, with due allowance for the pressure drop in all downstream sections. Use of specially designed valves suitable for use on high or variable back-pressure service should be considered.

(c) All discharge lines shall be run as direct as is practicable to the point of final release for disposal. For the longer lines, due consideration shall be given to the advantage of long-radius elbows, avoidance of close-up fittings, and the minimizing of excessive line strains by expansion joints and well-known means of support to minimize line-sway and vibration under operating conditions.

NOTE: It is recognized that no simple rule can be applied generally to fit the many installation requirements, which vary from simple short lines that discharge directly to the atmosphere to the extensive manifolded discharge piping systems where the quantity and rate of the product to be disposed of requires piping to a distant safe place.

UA-357 General Advisory Information on the Characteristics of Safety Relief Valves Discharging Into a Common Header

Because of the wide variety of types and kinds of safety relief valves, it is not considered advisable to attempt a description in this Appendix of the effects produced by discharging them into a common header. Several different types of valves may conceivably be connected into the same discharge header and the effect of back pressure on each type may be radically different. Data compiled by the manufacturers of each type of valve used should be consulted for information relative to its performance under the conditions anticipated.

[1] This construction has the further advantage of not transmitting discharge-pipe strains to the valve. In these types of installation, the back-pressure effect will be negligible, and no undue influence upon normal valve operation can result.

APPENDIX P
Basis for Establishing Stress Values for Ferrous Materials

UA-500

In the determination of allowable stress values for pressure parts the Committee is guided by successful experience in service, insofar as evidence of satisfactory performance is available. Such evidence is considered equivalent to test data where operating conditions are known with reasonable certainty. In the evaluation of new materials, it is necessary to be guided to a certain extent by the comparison of test information with similar data on successful applications of similar materials.

The mechanical properties considered, and factors applied to provide the maximum allowable stresses are as given below:

At any temperature listed below the creep range, the maximum allowable stress value for ferritic steels, Tables UCS-23, UCS-27 and UHT-23, is the lowest of these:

(1) 1/4 of the specified minimum tensile strength at room temperature,
(2) 1/4 of the tensile strength at temperature,
(3) 5/8 of the specified minimum yield strength at room temperature,
(4) 5/8 of the yield strength at temperature.

The maximum allowable stress value for austenitic steels, Table UHA-23, is the lowest of these:

(1) 1/4 of the specified minimum tensile strength at room temperature,
(2) 1/4 of the tensile strength at temperature,
(3) 5/8 of the specified minimum yield strength, at room temperature.
(4) 90% of the yield strength at temperature but not to exceed 5/8 of the specified minimum yield strength at room temperature.

At temperatures in the creep range, the stresses are based on 100 percent of the stress to produce a creep rate of 0.01 percent per 1000 hours, the values so chosen being based on a conservative average of reported tests as evaluated by the Committee. The resulting stress values with a few exceptions do not exceed 60 percent of the average stress to produce rupture at the end of 100,000 hours as determined from the available extrapolated data. With successful service experience as a guide, some values have been established up to a maximum limit of 100 percent of the estimated minimum stress to produce rupture at the end of 100,000 hours. In evaluating data greater weight is given to longer time tests.

For bolting materials, the basis for setting stresses is the same as for all other materials with the added requirement that the stresses for heat-treated materials at temperatures below the creep range will not exceed the lower of 20 percent of the room temperature specified minimum tensile strength, or 25 percent of the room temperature specified minimum yield strength.

Stress values for high temperatures are based, whenever possible, on representative properties of the materials under laboratory test conditions. The stress values are based on basic properties of the materials and no consideration is given for corrosive environment, for abnormal temperature and stress conditions, or for other design considerations.

APPENDIX Q
Basis for Establishing Stress Values for Nonferrous Materials

UA-600

The mechanical properties considered, and factors applied to provide the maximum allowable stresses are as given below:

At any temperature listed below the creep range, the maximum allowable stress value for non-ferrous materials, Table UNF-23, except for bolting is the lowest of these:

(1) 1/4 of the specified minimum tensile strength at room temperature,
(2) 1/4 of the tensile strength at temperature,
(3) 2/3 of the specified minimum yield strength at room temperature,
(4) 2/3 of the yield strength at temperature.

At any temperature listed below the creep range, the maximum allowable stress value for non-ferrous bolting materials is the lowest of:

(1) 1/5 of the specified minimum tensile strength at room temperature,
(2) 1/5 of the tensile strength at temperature,
(3) 1/4 of the specified minimum yield strength at room temperature,
(4) 1/4 of the yield strength at temperature.

At temperatures in the creep range, the maximum allowable stress values for non-ferrous materials are the lower of the stress producing a secondary creep rate of 0.01% per 1000 hours; or, the stress producing rupture in 100,000 hours.

APPENDIX R
Preheating

Introduction

Preheating may be employed during welding to assist in completion of the welded joint. The need for and temperature of preheat are dependent on a number of factors, such as the chemical analysis, degree of restraint of the parts being joined, elevated physical properties, and heavy thicknesses. Mandatory rules for preheating are, therefore, not given in this Division of Section VIII except as required in the footnotes that provide for exemptions to postweld heat treatment in Tables UCS-56 and UHA-32. Some practices used for preheating are given below as a general guide for the materials listed by P-Numbers in Section IX of the Code. It is cautioned that the preheating temperatures listed below do not necessarily insure satisfactory completion of the welded joint and requirements for individual materials within the P-Number listing may have preheating more or less restrictive than this general guide. The procedure specification for the material being welded specifies the minimum preheating requirements under Section IX of the Code weld procedure qualification requirements.

The heat of welding may assist in maintaining preheat temperatures after the start of welding and for inspection purposes temperature checks can be made near the weld. The method or extent of application of preheat is not therefore, specifically given. Normally when materials of two different P-Number groups are joined by welding, the preheat used will be that of the material with the higher preheat specified on the procedure specification.

UA-800 P-1 Group

(a) 175 F for material which has both a specified

maximum carbon content in excess of 0.30 per cent and a thickness at the joint in excess of 1 in.

(b) 50 F for all other materials in this group.

UA-801 P-2 Group

Preheat is not used for material in this group.

UA-802 P-3 Group

(a) 175 F for material which has either a specified minimum tensile strength in excess of 70,000 psi or a thickness at the joint in excess of ⅝ in.

(b) 50 F for all other materials in this group.

UA-803 P-4 Group

(a) 250 F for material which has either a specified minimum tensile strength in excess of 60,000 psi or a thickness at the joint in excess of ½ in.

(b) 50 F for all other materials in this group.

UA-804 P-5 Group

(a) 400 F for material which has either a specified minimum tensile strength in excess of 60,000 psi, or has both a specified minimum chromium content above 6.0 per cent and a thickness at the joint in excess of ½ in.

(b) 300 F for all other materials in this group.

UA-805 P-6 Group

400 F.

UA-806 P-7 Group

None.

UA-807 P-8 Group

None.

UA-808 P-9 Group

250 F for P-9A materials

300 F for P-9B and P-9C materials

UA-809 P-10 Group

175 F for P-10A materials

250 F for P-10B materials

For P-10C materials, preheat is neither required nor prohibited, and consideration shall be given to the limitation of interpass temperature for various thicknesses to avoid detrimental effects on the mechanical properties of heat treated material.

For P-10D and P-10E materials, 300 F with interpass temperature maintained between 350 F and 450 F.

UA-810 P-11 Group

(a) **P-11A Group**

Subgroup 1 – None (Note 1)
Subgroup 2 – Same as for P-5 Group (Note 1)
Subgroup 3 – Same as for P-5 Group (Note 1)

(b) **P-11B Group**

Subgroup 1 – Same as for P-3 Group (Note 1)
Subgroup 2 – Same as for P-3 Group (Note 1)
Subgroup 3 – Same as for P-3 Group (Note 1)
Subgroup 4 – Same as for P-3 Group (Note 1)
Subgroup 5 – Same as for P-3 Group (Note 1)
Subgroup 6 – Same as for P-5 Group (Note 1)
Subgroup 7 – Same as for P-5 Group (Note 1)

UA-811 P-12 Group

(a) **P-12A Group**

Subgroup 1 – Same as for P-1 Group

(b) **P-12B Group**

Subgroup 1 – Same as for P-3 Group
Subgroup 2 – Same as for P-1 Group
Subgroup 3 – Same as for P-4 Group
Subgroup 4 – Same as for P-5 Group

(c) **P-12C Group**

Subgroup 1 – Same as for P-3 Group

(Note 1) – Consideration shall be given to the limitation of interpass temperature for various thickness to avoid detrimental effects on the mechanical properties of heat treated materials.

APPENDIX S
Design Considerations for Bolted Flange Connections

The primary purpose of the rules for bolted flange connections in Appendix II is to insure safety, but there are certain other practical matters to be taken into consideration in order to obtain a serviceable design. One of the most important of these is the proportioning of the bolting, i.e., determining the number and size of the bolts.

In the great majority of designs the practice that has been used in the past should be adequate, viz., to follow the design rules in Appendix II and tighten the bolts sufficiently to withstand the test pressure without leakage. The considerations presented in the following discussion will be important only when some unusual feature exists, such as a very large diameter, a high design pressure, a high temperature, severe temperature gradients, an unusual gasket arrangement, and so on.

The maximum allowable stress values for bolting given in the various tables of Subsection C are design values to be used in determining the minimum amount of bolting required under the rules. However, a distinction must be kept carefully in mind between the design value and the bolt stress that might actually exist or that might be needed for conditions other than the design pressure. The initial tightening of the bolts is a prestressing operation, and the amount of bolt stress developed must be within proper limits, to insure, on the one hand, that it is adequate to provide against all conditions that tend to produce a leaking joint, and on the other hand, that it is not so excessive that yielding of the bolts and/or flanges can produce relaxation that also can result in leakage.

The first important consideration is the need for the joint to be tight in the hydrostatic test. An initial bolt stress of some magnitude greater than the design value therefore must be provided. If it is not, further bolt strain develops during the test, which tends to part the joint and thereby to decompress the gasket enough to allow leakage. The test pressure is usually one and one-half times the design pressure, and on this basis it may be thought that fifty per cent extra bolt stress above the design value will be sufficient. However, this is an over-simplification because, on the one hand, the safety factor against leakage under test conditions in general need not be as great as under operating conditions. On the other hand, if a stress-strain analysis of the joint is made, it may indicate that an initial bolt stress still higher than 1½ times the design value is needed. Such an analysis is one that considers the changes in bolt elongation, flange deflection and gasket load that take place with the application of internal pressure, starting from the prestressed condition. In any event, it is evident that an initial bolt stress higher than the design value may and, in some cases, must be developed in the tightening operation, and it is the intent of this Division of Section VIII that such a practice is permissible, provided it includes necessary and appropriate provision to insure against excessive flange distortion and gross crushing of the gasket.

It is possible for the bolt stress to decrease after initial tightening, because of slow creep or relaxation of the gasket, particularly in the case of the "softer" gasket materials. This may be the cause of leakage in the hydrostatic test, in which case it may suffice merely to retighten the bolts. A decrease in bolt stress can also occur in service at elevated temperatures, as a result of creep in the bolt and/or flange or gasket material, with consequent relaxation. When this results in leakage under service conditions, it is common practice to retighten the bolts, and sometimes a single such operation, or perhaps several repeated at long intervals, is sufficient to correct the condition. To avoid chronic difficulties of this nature, however, it is advisable when designing a joint for high temperature service to give attention to the relaxation properties of the materials involved, especially for temperatures where creep is the controlling factor in design.

In the other direction, excessive initial bolt stress can present a problem in the form of yielding in the bolting itself, and may occur in the tightening operation to the extent of damage or even breakage. This is especially likely with bolts of small diameter and with bolt materials

having a relatively low yield strength. The yield strength of mild carbon steel, annealed austenitic stainless steel, and certain of the non-ferrous bolting materials can easily be exceeded with ordinary wrench effort in the smaller bolt sizes. Even if no damage is evident, any additional load generated when internal pressure is applied can produce further yielding with possible leakage. Such yielding can also occur when there is very little margin between initial bolt stress and yield strength.

An increase in bolt stress, above any that may be due to internal pressure, might occur in service during start-up or other transient conditions, or perhaps even under normal operation. This can happen when there is an appreciable differential in temperature between the flanges and the bolts, or when the bolt material has a different coefficient of thermal expansion than the flange material. Any increase in bolt load due to this thermal effect, superposed on the load already existing, can cause yielding of the bolt material, whereas any pronounced decrease due to such effects can result in such a loss of bolt load as to be a direct cause of leakage. In either case, retightening of the bolts may be necessary, but it must not be forgotten that the effects of repeated retightening can be cumulative and may ultimately make the joint unserviceable.

In addition to the difficulties created by yielding of the bolts as described above, the possibility of similar difficulties arising from yielding of the flange or gasket material, under like circumstances or from other causes, should also be considered.

Excessive bolt stress, whatever the reason, may cause the flange to yield, even though the bolts may not yield. Any resulting excessive deflection of the flange, accompanied by permanent set, can produce a leaking joint when other effects are superposed. It can also damage the flange by making it more difficult to effect a tight joint thereafter. For example, irregular permanent distortion of the flange due to uneven bolt load around the circumference of the joint can warp the flange face and its gasket contact surface out of a true plane.

The gasket, too, can be overloaded, even without excessive bolt stress. The full initial bolt load is imposed entirely on the gasket, unless the gasket has a stop ring or the flange face detail is arranged to provide the equivalent. Without such means of controlling the compression of the gasket, consideration must be given to the selection of gasket type, size and material that will prevent gross crushing of the gasket.

From the foregoing, it is apparent that the bolt stress can vary over a considerable range above the design stress value. The design stress values for bolting in Subsection C have been set at a conservative value to provide a factor against yielding. At elevated temperatures, the design stress values are governed by the creep rate and stress-rupture strength. Any higher bolt stress existing before creep occurs in operation will have already served its purpose of seating the gasket and holding the hydrostatic test pressure, all at atmospheric temperature, and is not needed at the design pressure and temperature.

Theoretically, the margin against flange yielding is not as great. The design values for flange materials may be as high as five-eighths or two-thirds of the yield strength. However, the highest stress in a flange is usually the bending stress in the hub or shell, and is more or less localized. It is too conservative to assume that local yielding is followed immediately by over-all yielding of the entire flange. Even if a "plastic hinge" should develop, the ring portion of the flange takes up the portion of the load the hub and shell refuse to carry. Yielding is far more significant if it occurs first in the ring, but the limitation in the rules on the combined hub and ring stresses provides a safeguard. In this connection, it should be noted that a dual set of stresses is given for some of the materials in Table UHA-23, and that the lower values should be used in order to avoid yielding in the flanges.

Another very important item in bolting design is the question whether the necessary bolt stress is actually realized, and what special means of tightening, if any, must be employed. Most joints are tightened manually by ordinary wrenching, and it is advantageous to have designs that require no more than this. Some pitfalls must be avoided, however. The probable bolt stress developed manually, when using standard wrenches, is:

$$S = \frac{45{,}000}{\sqrt{d}}$$

where S is the bolt stress and d is the nominal diameter of the bolt. It can be seen that smaller bolts will have excessive stress unless judgment is exercised in pulling up on them. On the other hand, it will be impossible to develop the desired stress in very large bolts by ordinary hand wrenching. Impact wrenches may prove serviceable, but if not, resort may be had to such methods as preheating the bolt, or using hydraulically powered bolt tensioners. With some of these methods, control of the bolt stress is possible by means inherent in the procedure, especially if effective thread lubricants are employed, but in all cases the bolt stress can be regulated within reasonable tolerances by measuring the bolt elongation with suitable extensometer equipment. Ordinarily, simple wrenching without verification of the actual bolt stress meets all practical needs, and measured control of the stress is employed only when there is some special or important reason for doing so.

APPENDIX T
Temperature Protection

(a) Any pressure vessel in a service where it can be damaged by overheating should be provided with means by which the metal temperature can be controlled within safe limits or a safe shut-down can be effected.

(b) It is recognized that it is impracticable to specify detailed requirements to cover the multiplicity of means to prevent the operation of pressure vessels at over-temperature. Any means which in principle will provide compliance with (a) will meet the intent of this Division of Section III.

APPENDIX U
Ultrasonic Examination of Welds (UT)

UA-901 Scope

This Appendix describes procedures which shall be followed when ultrasonic examination of welds is specified in this Division of Section VIII. The pulse-echo method shall be used to satisfy the requirements of this Appendix.

UA-902 Application

The principle objective of procedures given herein is the detection, location and evaluation of defects within the weld and heat-affected zone. The welds shall be examined by the angle beam where possible. In the examination of weldments where geometry does not allow angle beam examination from both sides of the weld from a single surface or a combination of surfaces, both angle beam and straight beam methods shall be used.

UA-903 Basic Calibration Reflectors

Drilled holes shall be used as basic calibration reflectors to establish a primary reference response of the equipment and to construct a distance-amplitude correction curve. These holes shall be located either in the production material or in a basic calibration block of similar metallurgical structure and the same or an equivalent P-Number grouping as the production material. For the purposes of this examination, P-Numbers 1, 3, 4 and 5 materials are considered to be equivalent.

(a) *Basic Calibration Block.* If a basic calibration block is used, it shall have a thickness relative to the production material thickness as shown by Figure UA-903. Where two or more thicknesses are involved, the calibration thick-

ness shall be determined by the thickness of the production material to which the search unit is applied. If the contact surface of the production material has a radius of curvature of 10 in. or less, the curvature of the basic calibration block shall correspond to the radius of the production material within ± 10 percent.

(b) *Basic Calibration Hole.* The basic calibration hole as shown in Fig. UA-903 shall be drilled parallel to the contact surface of the basic calibration block or the production material. The location, depth, and diameter of this hole shall be as given in the table in Figure UA-903.

(c) *Other Calibration Reflectors.* In lieu of the above, other calibration reflectors are permitted, provided equivalent response is demonstrated.

UA-904 Surface Preparation

(a) *Contact Surfaces.* The finished contact surfaces shall be free from weld spatter and any roughness that would interfere with free movement of the search unit or impair the transmission of ultrasonic vibrations.

(b) *Weld Surfaces.* The finished weld surfaces shall be finished so that they cannot mask or be confused with reflections from defects. The weld surface shall merge smoothly into the surfaces of the adjacent base materials.

(c) *Basic Material.* The area of the base material through which the sound will travel in angle beam examination shall be completely scanned with a straight beam search unit to detect reflectors which might affect the interpretation of angle beam results. This is not a basis for rejection of the base material.

UA-905 Angle Beam Method

(a) *Calibration of Equipment*

(1) *Frequency* The nominal frequency shall be 2.25 MHz unless variables, such as production material grain structure, necessitate the use of other frequencies in order to assure adequate penetration.

(2) *Beam Angle* The beam angle in the production material shall be in the range of 40 degrees to 75 degrees inclusive with respect to the perpendicular to the contact surface.

(3) *Distance-Amplitude Corporation* Compensation for the distance traversed by the ultrasonic beam as it passes through the material shall be provided by the use of curves, as shown by Figure UA-905.1, or electronically.

(a) Determination of Curves – Distance-amplitude correction curves shall be constructed by utilizing the responses from the basic calibration hole described in Par. UA-903(b). The first point on the curve is obtained by placing the search unit as near as possible but not less than 3/8 node or 2 inches, whichever is less, from the calibration hole and positioning for maximum response. The gain control then is set so that this response is 75 percent of full CRT screen. *This is the primary reference response.* Without changing the gain, the search unit shall be placed similarly at other nodal positions covering the contemplated examination distance range and the corresponding responses marked on the CRT screen. These points shall be joined by a smooth line and its length shall be such as to cover the examination range. See Figure UA-905.1.

(b) Electronic Distance-Amplitude Correction If the instrument is equipped with an electronic distance-amplitude correction device, the primary reference response shall be equalized at 75 percent of full CRT screen height over the distance range to be employed in the examination.

(4) *Transfer Mechanisms* Transfer mechanisms shall be used to correlate the responses from the basic calibration block and from the production material. Transfer shall be accomplished by noting the difference between responses received from the same reference reflector in the basic calibration block and the production material and correcting for this difference.

These reference reflectors may be "V" notches, an angle beam search unit acting as a reflector, or any other reflector which will aid in accomplishing the transfer.

The transfer mechanism shall be used once per 10 feet of weld per plate and, in addition, it shall be performed at least twice for each type of welded joint.

(b) *Examination Procedure*

(1) *Coverage.* Where possible, butt welds shall be examined from both sides of the weld (usually from one surface only).

(2) *Sensitivity Level.* The reference level sensitivity for monitoring discontinuities is the primary reference response corrected for distance by the distance-amplitude curve or electronically,

modified by the transfer mechanism if used.

When possible, scanning shall be performed at a minimum gain setting of two times the reference level sensitivity.

(3) *Reference Level.* The reference level for monitoring discontinuities is the primary reference response corrected for distance by the distance-amplitude curve or electronically, modified by the transfer mechanism.

(4) *Detection of Defects Parallel to the Weld*

(a) Scanning Motion. The search unit shall be placed on the contact surface with the beam aimed about 90 degrees to the weld and manipulated laterally and longitudinally so that the ultrasonic beam passes through all of the weld metal in two different approaches of the beam on the reflector.

(b) Two Search Unit Technique. Techniques employing two search units as shown by Figure UA-905.2 may be used to detect lack of penetration in double welded butt joints.

(5) *Detection of Defects Transverse to the Weld.* Two search units shall be placed on the contact surfaces adjacent to the weld, one on each side, making an angle of 45 degrees or less with the axis of the weld as shown by Figure UA-905.3. Alternatively, if the weld surface has been made smooth, one search unit may be placed on the centerline of the weld with the beam directed along the weld - directed to scan the entire depth and width of the weld.

UA-906 Straight Beam Method

(a) *Calibration of Equipment*

(1) *Frequency.* The nominal frequency shall be 2.25MHz unless variables, such as production material grain structure, necessitate the use of other frequencies in order to assure adequate penetration.

(2) *Distance-Amplitude Correction.* A distance amplitude correction curve need not be constructed when the thickness of material is less than 2 in. For greater thicknesses, using the proper basic calibration block (see Fig. UA-903, position the search unit for maximum response from the basic calibration hole at ¼ T (See Figure UA-906.1). Adjust the signal amplitude to 50 percent of full CRT screen. *This is the primary reference response.* Without changing the gain control, position the search unit for maximum response from the basic calibration hole at ¾ T and mark its amplitude on the CRT screen. Join the two points with a straight line and extend its length to cover the test range (see Figure UA-906.2).

(3) *Electronic Distance – Amplitude Correction Device.* The primary reference response shall be equalized over the distance range to be employed in the examination.

(4) *Reference Level.* The reference level for monitoring discontinuities is the primary reference response corrected for distance-amplitude curve or electronically. (See Paragraphs UA-906 (a) (2) or (3)).

(b) *Examination Procedure*

(1) *Scanning Motion.* The weld shall be examined by moving the search unit progressively along and across a sufficient contact area so to scan the entire world.

(2) *Sensitivity Level.* When possible, scanning shall be performed at a minimum gain setting of 2 times the primary reference level. Evaluation of discontinuities shall be carried out with the gain control set at the reference level.

(3) *Monitoring of Procedures.* Penetration shall be verified (1) by obtaining a reflection from an opposite parallel surface, or (2) by obtaining the back reflection on similar material while using approximately the same length of sound travel.

UA-907 Evaluation of Indications

All indications which produce a response greater than 20 percent of the reference level shall be investigated to the extent that the operator can determine the shape, identity and location of all such reflectors and evaluate them in terms of the acceptance-rejection standards of Par. UA-908.

UA-908 Acceptance-Rejection Standards

Linear type discontinuities are unacceptable if the amplitude exceeds the reference level and discontinuities have lengths which exceed the following:

1/4″ for t up to 3/4″
1/3 t for t from 3/4″ to 2 1/4″
3/4″ for t over 2 1/4″

where t is the thickness of the weld being examined. If the weld joins two members having different thicknesses at the weld, t is the thinner of these two thicknesses. Where discontinuities are interpreted to be cracks, lack of fusion, and

incomplete penetration, they are unacceptable regardless of length.

UA-909 Repairs

Repairs shall be re-examined by the same procedures used for detection of the defection of the defect(s). Acceptability of repairs shall be determined by the same acceptance-rejection standards.

UA-910 Report of Examination

The manufacturer shall prepare a report of the ultrasonic examination and a copy of this report shall be retained until the data report is signed. The report shall contain the following:

(a) All procedures and equipment shall be identified sufficiently to permit duplication of the examination(s) at a later date. This shall include initial calibration data for the equipment and any significant changes in subsequent re-checks.

(b) A marked up drawing or sketch indicating the weld(s) examined, the item or piece number, and identification of the operator who carried out each inspection or part thereof.

(c) A record of repaired areas shall be noted as well as the results of the re-examination of the repaired areas. The manufacturer shall maintain also a record of all reflections from uncorrected areas having responses that exceed 50 percent of the reference level. This record shall locate each area, the response level, the dimensions, the depth below the surface, and the classification.

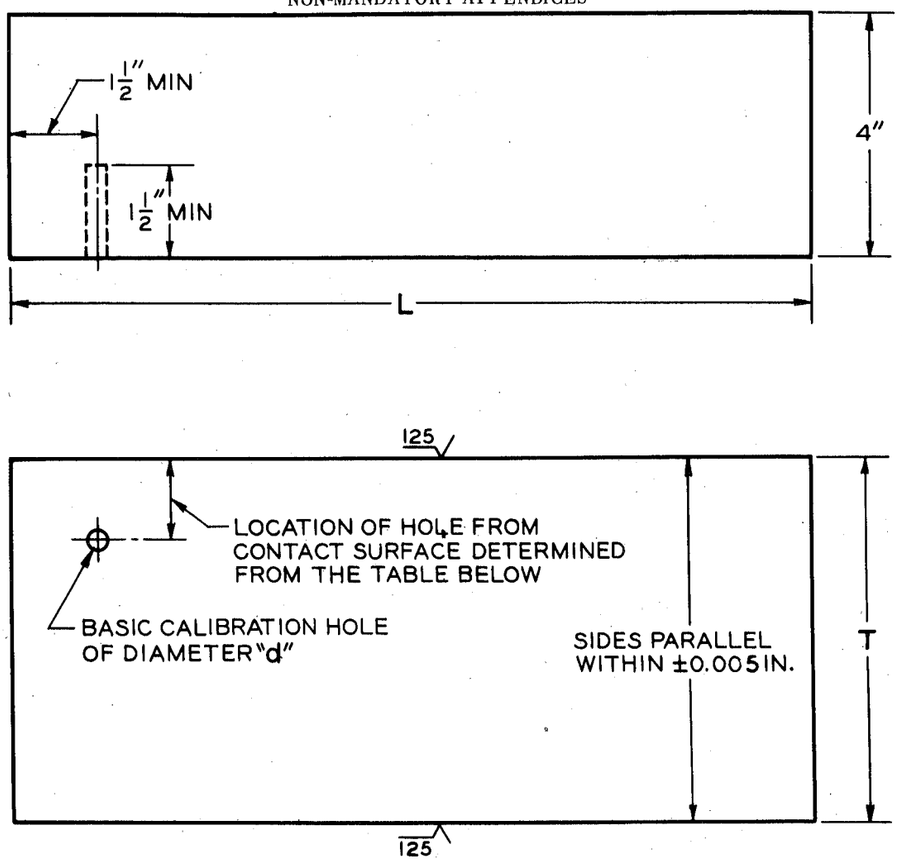

L = Length of block determined by the angle of search unit and the node used for examination of Production Materials.
T = Thickness of basic calibration block (see Table below).
D = Depth of Basic Calibration hole (see Figure).
d = Diameter of Basic Calibration hole (see Table below).
t = Nominal production material thickness.

Material Production Material Thickness(t)	Basic Calibration Basic Thickness(T)	Hole Location	Hole Diameter(d)
Up to 1" Incl.	¾" or t	½ T	3/32"
Over 1" thru 2"	1½" or t	¼ T	1/8"
Over 2" thru 4"	3" or t	¼ T	3/16"
Over 4" thru 6"	5" or t	¼ T	1/4"
Over 6" thru 8"	7" or t	¼ T	5/16"
Over 8" thru 10"	9" or t	¼ T	3/8"
Over 10"	t	¼ T	See Note 1

[1] For each increase in thickness of 2 inches or fraction thereof the hole diameter shall increase 1/16-inch.

FIGURE UA-903
BASIC CALIBRATION BLOCK

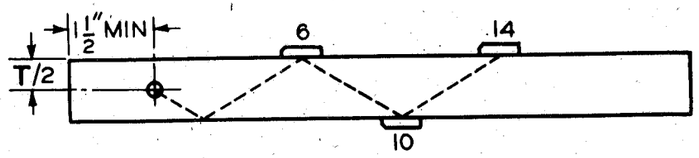

FOR THICKNESS 1 INCH OR LESS

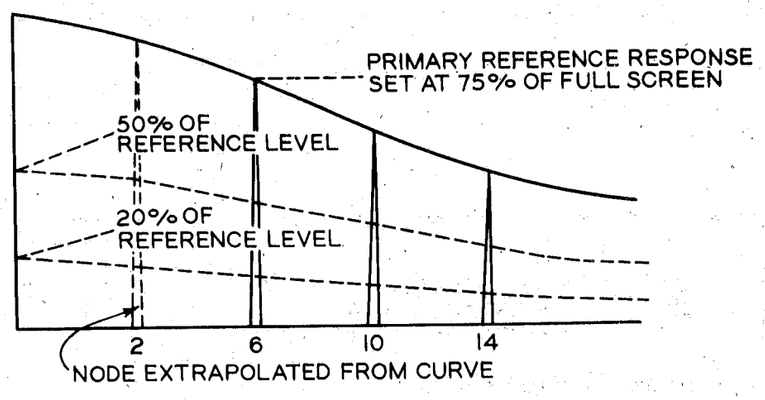

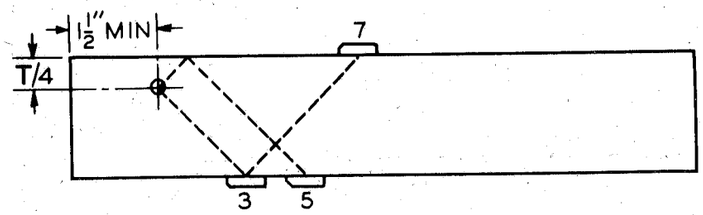

FOR THICKNESS OVER 1 INCH

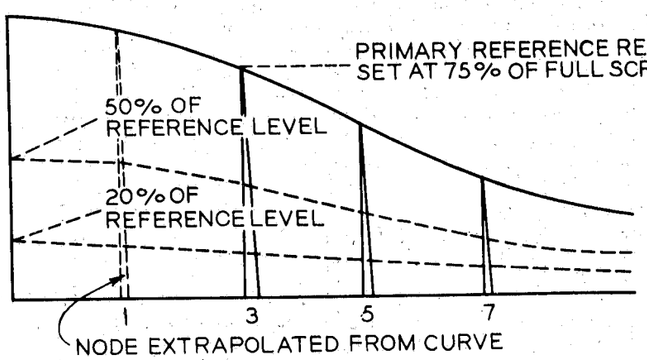

FIGURE UA-905.1
TYPICAL DISTANCE AMPLITUDE CORRECTION CURVE
(ANGLE BEAM METHOD)
(Distance in eighths of a node. For example, 14 is 14/8 node).

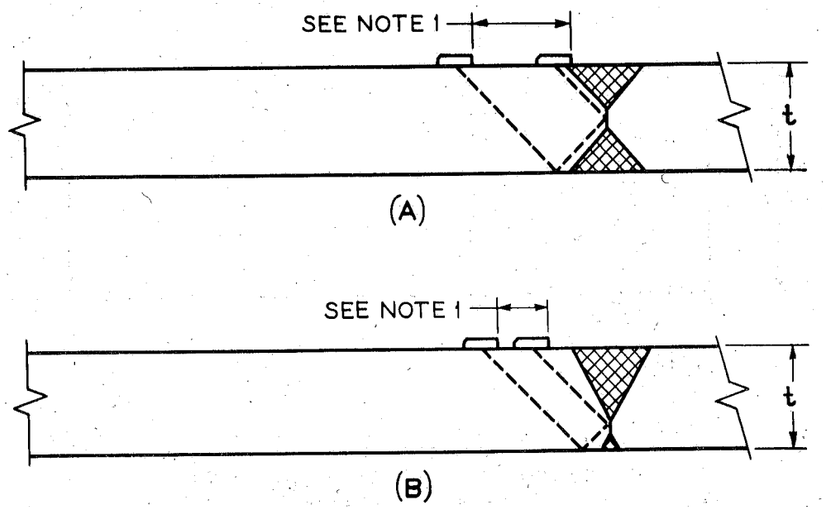

[1] The Search Units position will vary because the Search Units must be located in relationship to the sound beam travel.

FIGURE UA-905.2
TYPICAL DOUBLE SEARCH UNIT TECHNIQUE FOR DETECTING LACK OF PENETRATION IN DOUBLE WELDED JOINTS

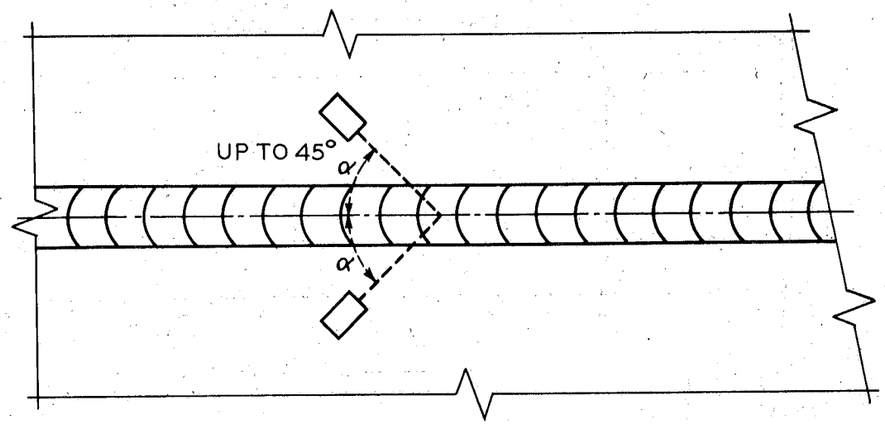

FIGURE UA-905.3
TYPICAL TWO SEARCH UNIT TECHNIQUE FOR DETECTING TRANSVERSE DISCONTINUITIES

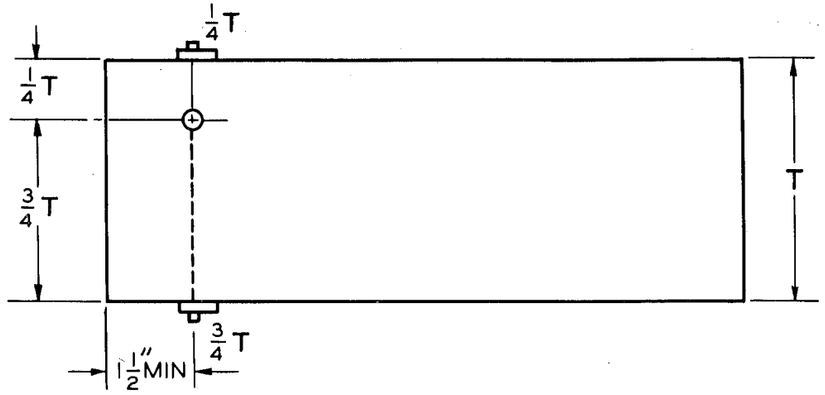

FIGURE UA-906.1
SEARCH UNIT POSITION FOR MAXIMUM RESPONSE
(STRAIGHT BEAM METHOD)

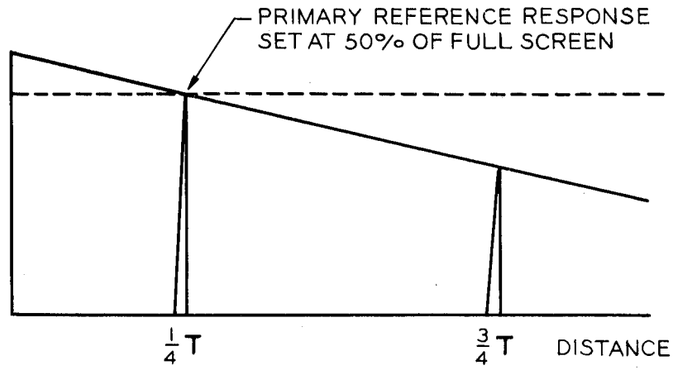

FIGURE UA-906.2
TYPICAL DISTANCE AMPLITUDE CORRECTION CURVE
(STRAIGHT BEAM METHOD)

FORM U-1 MANUFACTURERS' DATA REPORT FOR PRESSURE VESSELS
As required by the Provisions of the ASME Code Rules, Section VIII, Division 1

1. Manufactured by _____ (Name and address of Manufacturer)

2. Manufactured for _____ (Name and address of Purchaser)

3. Type _____ (Horiz. or Vert.) Kind _____ (Tank, Jacketed, Heat Exch.) Vessel No. (Mfrs. Serial) _____ (State & State No.) _____ Natl. Bd. No. _____ Yr. Built _____

Items 4–9 incl. to be completed for single wall vessels (such as air tanks), jackets of jacketed vessels, or shells of heat exchangers.

4. SHELL: Material _____ (Kind and Spec. No.) T.S. _____ (Flg. or F.B. & Spec. Min. T.S.) Nominal Thickness ____ In. Corrosion Allowance ____ In. Diam. ____ Ft. ____ In. Length ____ Ft. ____ In.

5. SEAMS: Long _____ (Welded, Dbl., Single, Lap, Butt) H.T. _____ (Yes or No)[1] R.T. _____ (Spot or Complete) Sectioned _____ (Yes or No) Efficiency _____ %

Girth _____ H.T. _____ R.T. _____ Sectioned _____ No. of Courses _____

If riveted describe seams fully on reverse side of form.

6. HEADS (a) Material _____ T.S. _____ (b) Material _____ T.S. _____

	Location (Top, bottom, ends)	Thickness	Crown Radius	Knuckle Radius	Elliptical Ratio	Conical Apex Angle	Hemispherical Radius	Flat Diameter	Side to Pressure (Convex or Concave)
(a)									
(b)									

If removable, bolts used _____ (Material, Spec. No., T.S., Size, Number) Other fastening _____ (Describe or Attach Sketch)

7. STAYBOLTS: _____ (Material) If hollow _____ (Size of Hole) Attachment _____ (Threaded, Welded) Pitch _____ (Horiz.) X _____ (Vert.) Diam. _____ (Nominal)

8. JACKET CLOSURE: _____ (Describe as ogee & weld, bar, etc. If bar, give dimensions, if bolted, describe or sketch)

9. Constructed for max. allowable working press[2] _____ psi at max. temp. _____ °F. Min. temp. (when less than –20°) _____ °F. Hydrostatic / Pneumatic or Combination Test Press _____ psi.

Items 10 and 11 to be completed for tube sections.

10. TUBE SHEETS: Stationary. Material _____ (Kind & Spec. No.) Diam. _____ (Subject to Pressure) In. Thickness ____ In. Attachment _____ (Welded, Bolted)

Floating. Material _____ (Kind & Spec. No.) Diam. _____ In. Thickness ____ In. Attachment _____

11. TUBES: Material _____ (Kind & Spec. No.) O.D. _____ In. Thickness _____ Inches or Gage Number _____ Type _____ (Straight or U)

Items 12–15 incl. to be completed for inner chambers of jacketed vessels, or channels of heat exchangers.

12. SHELL Material _____ (Kind and Spec. No.) T.S. _____ (Flg. or F.B. & Spec. Min. T.S.) Nominal Thickness ____ In. Corrosion Allowance ____ In. Diam. ____ Ft. ____ In. Length ____ Ft. ____ In.

13. SEAMS: Long _____ (Welded, Dbl., Single, Lap, Butt) H.T. _____ (Yes or No)[1] R.T. _____ (Spot or Complete) Sectioned _____ (Yes or No) Efficiency _____ %

Girth _____ H.T. _____ R.T. _____ Sectioned _____ No. of courses _____

If riveted describe seams fully on reverse side of form.

14. HEADS (a) Material _____ T.S. _____ (b) Material _____ T.S. _____ (c) Material _____ T.S. _____

	Location	Thickness	Crown Radius	Knuckle Radius	Elliptical Ratio	Conical Apex Angle	Hemispherical Radius	Flat Diameter	Side to Pressure (Convex or Concave)
(a)	Top, bottom, ends								
(b)	Channel								
(c)	Floating								

If removable, bolts used (a) _____ (Material, Spec. No., T.S., Size, Number) (b) _____ (c) _____ Other fastening _____ (Describe or Attach Sketch)

15. Constructed for max. allowable working press[2] _____ psi at max. temp. _____ °F. Min. temp. (when less than –20°) _____ °F. Hydrostatic / Pneumatic or Combination Test Press _____ psi.

Items below to be completed for all vessels where applicable.

16. SAFETY VALVE OUTLETS: Number _____ Size _____ Location _____

17. NOZZLES

Purpose (Inlet, Outlet, Drain)	Number	Diam. or Size	Type	Material	Thickness	Reinforcement Material	How Attached

[1] If postweld heat-treated. [2] List under remarks other internal or external pressures with coincident temperature when applicable.

(Over)

FORM U-1 (back)

INSPECTION Manholes, No. _____ Size _____ Location _____
OPENINGS: Handholes, No. _____ Size _____ Location _____
Threaded, No. _____ Size _____ Location _____

SUPPORTS: Skirt _____ (Yes or No) Lugs _____ (Number) Legs _____ (Number) Other _____ (Describe) Attached _____ (Where & How)

REMARKS: _____

(Brief description of purpose of the vessel, as Air Tank, After Cooler, Jacketed Cooker, etc. State contents of each part.)

We certify that the statements made in this report are correct and that all details of design, material, construction, and workmanship of this vessel conform to the ASME Code for Pressure Vessels, Section VIII, Division I.

Date _____ 19____ Signed _____ (Manufacturer) By _____

Certificate of Authorization Expires _____

CERTIFICATE OF SHOP INSPECTION

VESSEL MADE BY _____ at _____

I, the undersigned, holding a valid commission issued by the National Board of Boiler and Pressure Vessel Inspectors and/or the State or Province _____ and employed by _____ of _____ have inspected the pressure vessel described in this manufacturer's data report on _____ 19___, and state that to the best of my knowledge and belief, the manufacturer has constructed this pressure vessel in accordance with the applicable sections of the ASME Boiler and Pressure Vessel Code.

By signing this certificate neither the Inspector nor his employer makes any warranty, expressed or implied, concerning the pressure vessel described in this manufacturer's data report. Furthermore, neither the Inspector nor his employer shall be liable in any manner for any personal injury or property damage or a loss of any kind arising from or connected with this inspection.

Date _____ 19 ____

_____ Commissions _____
Inspectors Signature — Nat'l Board, State, or Province and No.

CERTIFICATE OF FIELD ASSEMBLY INSPECTION

I, the undersigned, holding a valid commission issued by the National Board of Boiler and Pressure Vessel Inspectors and/or the State or Province _____ and employed by _____ of _____ have compared the statements in this manufacturer's data report with the described pressure vessel and state that parts referred to as data items _____, not included in the certificate of shop inspection have been inspected by me and that to the best of my knowledge and belief the manufacturer has constructed and assembled this pressure vessel in accordance with the applicable sections of the ASME Boiler and Pressure Vessel Code. The described vessel was inspected and subjected to a hydrostatic test of _____ psi.

By signing this certificate neither the Inspector nor his employer makes any warranty, expressed or implied, concerning the pressure vessel described in this manufacturer's data report. Furthermore, neither the Inspector nor his employer shall be liable in any manner for any personal injury or property damage or a loss of any kind arising from or connected with this inspection.

Date _____ 19 ____

_____ Commissions _____
Inspector's Signature — Nat'l Board, State, or Province and No.

FORM U-1A MANUFACTURERS' DATA REPORT FOR PRESSURE VESSELS
Alternate Form for Single Chamber Completely Shop-Fabricated Vessels Only
As Required by the Provisions of the ASME Code Rules, Section VIII, Division I

1. Manufactured by _____ (Name and address of Manufacturer)

2. Manufactured for _____ (Name and address of Purchaser)

3. Type _____ (Horiz. or Vert.) Vessel No. (_____) (_____) (State & State No.) Natl. Bd. No. _____ Yr. Built _____

4. SHELL: Matl. _____ (Kind and Spec. No.) T.S. _____ (Fig. or F.B. & Spec. Min. T.S.) Nom. Thk. ____ In. Corr. Allow. ____ In. Diam. ____ Ft. ____ In. Length ____ Ft. ____ In.

5. SEAMS: Long _____ (Welded, Dbl., Single, Lap, Butt) H.T. _____ (Yes or No)[1] R.T. _____ (Spot or Complete) Sectioned _____ (Yes or No) Efficiency _____ %

Girth _____ H.T. _____ R.T. _____ Sectioned _____ No. of Courses _____

If riveted or brazed describe seams fully under remarks.

6. HEADS: (a) Material _____ T.S. _____ (b) Material _____ T.S. _____

	Location (Top, bottom, ends)	Thickness	Crown Radius	Knuckle Radius	Elliptical Ratio	Conical Apex Angle	Hemispherical Radius	Flat Diameter	Side to Pressure (Convex or Concave)
(a)									
(b)									

If removable, bolts used _____ (Material, Spec. No., T.S., Size, Number) Other fastening _____ (Describe or Attach Sketch)

7. Constructed for max. allowable working press.[2] _____ psi at max. temp. _____ °F. Min. temp. (when less than −20°) _____ °F. Hydrostatic / Pneumatic or / Combination } Test Press _____ psi.

8. SAFETY OR RELIEF VALVE OUTLETS: Number _____ Size _____ Location _____

9. NOZZLES:

Purpose (Inlet, Outlet, Drain)	Number	Diam. or Size	Type	Material	Thickness	Reinforcement Material	How Attached

10. INSPECTION OPENINGS: Manholes, No. _____ Size _____ Location _____
Handholes, No. _____ Size _____ Location _____
Threaded, No. _____ Size _____ Location _____

11. SUPPORTS: Skirt _____ (Yes or No) Lugs _____ (Number) Legs _____ (Number) Other _____ (Describe) Attached _____ (Where & How)

12. REMARKS: _____

(Brief description of purpose of the vessel as Air Tank, Water Tank, L.P.G., Etc.—State Contents.
[1] If postweld heat-treated.
[2] List other internal or external pressures with coincident temperature when applicable.

We certify that the statements made in this report are correct and that all details of design, material, construction, and workmanship of this vessel conform to the ASME Code for Pressure Vessels, Section VIII, Division I.

Date _____ 19 ____ Signed _____ (Manufacturer) By _____

Certificate of Authorization Expires _____

CERTIFICATE OF SHOP INSPECTION

VESSEL MADE BY _____ at _____

I, the undersigned, holding a valid commission issued by the National Board of Boiler and Pressure Vessel Inspectors and/or the State or Province _____ and employed by _____ of _____ have inspected the pressure vessel described in this manufacturer's data report on _____ 19___, and state that to the best of my knowledge and belief, the manufacturer has constructed this pressure vessel in accordance with the applicable sections of the ASME Boiler and Pressure Vessel Code.

By signing this certificate neither the Inspector nor his employer makes any warranty, expressed or implied, concerning the pressure vessel described in this manufacturer's data report. Furthermore, neither the Inspector nor his employer shall be liable in any manner for any personal injury or property damage or a loss of any kind arising from or connected with this inspection.

Date _____ 19 _____

_____ Commissions _____
Inspector's Signature — Nat'l Board, State, or Province and No.

FORM U-2 MANUFACTURERS' PARTIAL DATA REPORT
A Part of a Pressure Vessel Fabricated by One Manufacturer for Another Manufacturer
As Required by the Provisions of the ASME Code Rules, Section VIII, Division I

1. (a) Manufactured by _____
(Name and address of manufacturer of part)

(b) Manufactured for _____
(Name and address of manufacturer of boiler or vessel)

2. Identification—Manufacturer's Serial No. of Part _____

(a) Constructed According to Blueprint No. _____ B.P. Prepared by _____

(b) Description of Part Inspected _____

3. Remarks _____

We certify that the statements made in this report are correct and that all details of design, material, construction, and workmanship of this vessel conform to the ASME Code for Pressure Vessels, Section VIII, Division I.

Date _____ 19____ Signed _____ By _____
(Manufacturer) (Representative)

Certificate of Authorization Expires _____ 19_____

CERTIFICATE OF SHOP INSPECTION

I, the undersigned, holding a valid commission issued by the National Board of Boiler and Pressure Vessel Inspectors and/or the State or Province _____ and employed by _____ of _____ have inspected the part of a pressure vessel described in this manufacturer's partial data report on _____ 19_____, and state that to the best of my knowledge and belief, the manufacturer has constructed this part in accordance with the applicable sections of the ASME Boiler and Pressure Vessel Code.

By signing this certificate, neither the Inspector nor his employer makes any warranty, expressed or implied, concerning the part described in this manufacturer's partial data report. Furthermore, neither the Inspector nor his employer shall be liable in any manner for any personal injury or property damage or a loss of any kind arising from or connected with this inspection.

Date _____ 19_____

_____ Commissions _____
Inspector's Signature Nat'l Board, State, or Province and No.

FORM U-2 (back)

Items 4–9 incl. to be completed for single wall vessels (such as air tanks), jackets of jacketed vessels, or shells of heat exchangers.

4. SHELL: Material _____ (Kind and Spec. No.) T.S. _____ (Fig. or F.B. & Spec. Min. T.S.) Nominal Thickness ____ Corrosion In. Allowance ___ In. Diam. ___ Ft. ___ In. Length ___ Ft. ___ In.

5. SEAMS: Long _____ (Welded, Dbl., Single, Lap, Butt) H.T. _____ (Yes or No)[1] R.T. _____ (Spot or Complete) Sectioned _____ (Yes or No) Efficiency _____ %

Girth _____ H.T. _____ R.T. _____ Sectioned _____ No. of Courses _____

If riveted describe seams fully on reverse side of form.

6. HEADS: (a) Material _____ T.S. _____ (b) Material _____ T.S. _____

	Location (Top, bottom, ends)	Thickness	Crown Radius	Knuckle Radius	Elliptical Ratio	Conical Apex angle	Hemispherical Radius	Flat Diameter	Side to Pressure (Convex or Concave)
(a)									
(b)									

If removable, bolts used _____ (Material, Spec. No. T.S., Size, Number) Other fastening _____ (Describe or Attach Sketch)

7. STAYBOLTS: _____ (Material) If hollow _____ (Size of Hole) Attachment _____ (Threaded, Welded) Pitch _____ (Horiz.) X _____ (Vert.) Diam. _____ (Nominal)

8. JACKET CLOSURE: _____ (Describe as ogee & weld, bar, etc. If bar, give dimensions, if bolted, describe or sketch)

9. Constructed for max. allowable working press.[2] _____ psi at max. temp. _____ °F. Min. temp. (when less than −20°) _____ °F.

Items 10 and 11 to be completed for tube sections.

10. TUBE SHEETS: Stationary. Material _____ (Kind & Spec. No.) Diam. _____ (Subject to Pressure) In. Thickness ____ In. Attachment _____ (Welded, Bolted)

Floating. Material _____ (Kind & Spec. No.) Diam. _____ In. Thickness ____ In. Attachment _____

11. TUBES: Material _____ (Kind & Spec. No.) O.D. _____ In. Thickness _____ Inches or Gage Number _____ Type _____ (Straight or U)

Items 12–15 incl. to be completed for inner chambers of jacketed vessels, or channels of heat exchangers.

12. SHELL: Material _____ (Kind and Spec. No.) T.S. _____ (Fig. or F.B. & Spec. Min. T.S.) Nominal Thickness ____ Corrosion In. Allowance ___ In. Diam. ___ Ft. ___ In. Length ___ Ft. ___ In.

13. SEAMS: Long _____ (Welded, Dbl., Single, Lap, Butt) H.T. _____ (Yes or No)[1] R.T. _____ (Spot or Complete) Sectioned _____ (Yes or No) Efficiency _____ %

Girth _____ H.T. _____ R.T. _____ Sectioned _____ No. of courses _____

If riveted describe seams fully on reverse side of form.

14. HEADS: (a) Material _____ T.S. _____ (b) Material _____ T.S. _____ (c) Material _____ T.S. _____

	Location	Thickness	Crown Radius	Knuckle Radius	Elliptical Ratio	Conical Apex angle	Hemispherical Radius	Flat Diameter	Side to Pressure (Convex or Concave)
(a)	Top, bottom, ends								
(b)	Channel								
(c)	Floating								

If removable, bolts used (a) _____ (Material, Spec. No., T.S., Size, Number) (b) _____

(c) _____ Other fastening _____ (Describe or Attach Sketch)

15. Constructed for max. allowable working press.[2] _____ psi at max. temp. _____ °F. Min. temp. (when less than −20°) _____ °F.

Items below to be completed for all vessels where applicable.

16. SAFETY VALVE OUTLETS: Number _____ Size _____ Location _____

17. NOZZLES:

Purpose (Inlet, Outlet, Drain)	Number	Diam. or Size	Type	Material	Thickness	Reinforcement Material	How Attached

18. INSPECTION OPENINGS: Manholes, No. _____ Size _____ Location _____
Handholes, No. _____ Size _____ Location _____
Threaded, No. _____ Size _____ Location _____

19. SUPPORTS: Skirt _____ (Yes or No) Lugs _____ (Number) Legs _____ (Number) Other _____ (Describe) Attached _____ (Where & How)

[1] If postweld heat-treated.
[2] List under item 3 other internal or external pressures with coincident temperature when applicable.

Printed in U.S.A. (11/67)

This Form is obtainable from the ASME, 345 E. 47th St., New York, N.Y. 10017

FORM U-3 MANUFACTURERS' CERTIFICATE OF COMPLIANCE COVERING PRESSURE VESSELS TO BE STAMPED WITH THE UM SYMBOL

[See Par. U-1(h)]

1. Manufactured by _____ (Name and address of Manufacturer)

2. Manufactured for _____ (Name and address of Purchaser)

3. Type _____ (Horizontal or Vertical) Pressure Vessel No. _____ (Mfrs. Serial No.) (State and State No.) Year built _____

4. Do the chemical and mechanical properties of all materials meet the requirements of the Code? _____

5. Shell or Drums: No. ___ Diameter ___ Ft. _____ (Or Width) In. Length over-all _____ Ft. _____ In. Height _____ Ft. _____ In.

6. Markings on shell plates _____ (Fig. or F.B. & Spec. Min. T.S.) Rivets, stays, and braces _____ (Iron or Steel)

7. Shell Plates _____ (Outer) (Thickness) In. Butt straps _____ (thickness) In. Styles of seams: Longitudinal _____ Girth _____ (Riveted, Forge Welded, Brazed, or Welded—Type of Joint)

8. Diameter of rivet holes _____ In. Pitch of rivets ____ × ____ × ____ Efficiency of joint _____ %

9. Girth Joints _____ (Single or Double Riveted) Diameter of rivet holes ____ In. Pitch of rivets ____ In. No. of courses _____

10. Inner Shell _____ (Thickness) In. Style of seams; Longitudinal _____ Girth _____ Length of section of course ____ Ft. ____ In. (Riveted, Forge Welded, Brazed, or Welded—Type of Joint)

11. Heads: Flat or dished _____ (Thickness) In. Radius of dish _____ In. Side to pressure _____ (Concave or Convex)

If removable, bolts used _____ (Number and Size) or method of fastening _____ (Describe or Sketch)

12. Staybolts _____ (Iron or Steel) If hollow _____ (Size of Hole) 13. Maximum pitch _____ (Horizontal) × _____ (Vertical) Diameter _____ (Over the Threads) In.

14. Safety Valve Outlets: No. _____ Size _____

15. Have the welders and the welding procedure been qualified in accordance with Code requirements? _____

16. Drain Connection _____ (Size) In. Hand Holes or Sight Holes _____ (Number, Size, and Location)

17. Constructed for maximum allowable working pressure _____ psi at _____ °F.

Hydrostatic test _____ psi.

Remarks: _____ (Vessel to be used for air, gas, ammonia, etc.)

We certify the above data to be correct and except for the omission of shop inspection that all details of material and construction and wormanship of this unfired pressure vessel conform to the ASME Pressure Vessel Code, Section VIII, Division I.

Date _____ 19 ____ Signed _____ (Manufacturer) by _____

Certificate No. _____

.....
(Date)

The American Society of Mechanical Engineers
Boiler and Pressure Vessel Committee
United Engineering Center
345 East 47th Street, New York, N.Y. 10017

Gentlemen:

We fabricate .....
(power boilers or parts thereof, water walls, superheaters, steel economizers, locomotive boilers, pressure piping, steel plate heating boilers, miniature boilers, nuclear vessels (state whether Class A or Class B), pressure vessels, or safety valves)

in our shops, located .....
and make application for an official stamp of The American Society of Mechanical Engineers, and also a certificate of authorization permitting its use for a specified period.

In consideration of the recipt of the official .....
(power, locomotive, steel plate heating or miniature boiler, pressure piping, nuclear vessel, pressure vessel, or safety valve)

stamp of The American Society of Mechanical Engineers, we hereby agree with said The American Society of Mechanical Engineers that it shall be used only by us and only in the manner prescribed in the Boiler and Pressure Vessel Code formulated by the Boiler and Pressure Vessel Committee. We further agree to surrender the stamp, or stamps subsequently issued, immediately to the Society at any time the Society may so request, or immediately at the time this company discontinues the manufacture of the above-mentioned articles, or immediately at the time this company does not have in its possession a certificate of authorization containing a currently effective date for the type of symbol issued hereunder.

Corporate Seal

.....
(Corporate Name)

By .....

Official Capacity .....

STATE OF .....
COUNTY OF ..... } *SS.*

On the ..... day of ..... 19..... before me

personally came ..... to me known, who being by me duly sworn, did

depose and say that he resides in ..... that he is the ..... of

....., the corporation described in and which executed the foregoing instrument, that he knows the seal of said corporation; that the seal affixed to said instrument is such corporate seal; that it was so affixed by order of the Board of Directors of said corporation; that he signed his name thereto by like order; and that the facts stated in the said instrument are true.

.....
(Notary Public)

IMPORTANT

The agency performing our Code Shop Inspection is _____

Certificate No. _____

.....
(Date)

The American Society of Mechanical Engineers
Boiler and Pressure Vessel Committee
United Engineering Center
345 East 47th Street, New York, N. Y. 10017

Gentlemen:

We fabricate pressure vessels under Par. U-1 (h) of the 1968 Code in our shops located at .....
and make application for an official stamp of The American Society of Mechanical Engineers, and also for a certificate of authorization permitting its use for a specified period.

In consideration of the receipt of the official —UM— stamp of The American Society of Mechanical Engineers, we hereby agree with said The American Society of Mechanical Engineers that it shall be used only by us and only in the manner prescribed in the ASME Boiler and Pressure Vessel Code as formulated by the Boiler and Pressure Vessel Committee. We further agree to surrender the stamp, or stamps subsequently issued, immediately to the Society at any time the Society may so request, or immediately at the time this Company discontinues the manufacture of the above-mentioned articles, or immediately at the time this Company does not have in its possession a certificate of authorization containing a currently effective date for the type of symbol issued hereunder.

Corporate Seal

.....
(Corporate Name)

By .....

Official Capacity .....

STATE OF .....
COUNTY OF ..... } SS

On the ..... day of ..... 19 ..... before me personally came ..... to me known, who being by me duly sworn, did depose and say that he resides in ....., that he is the ..... of ....., the corporation described in and which executed the foregoing instrument; that he knows the seal of said corporation; that the seal affixed to said instrument is such corporate seal; that it was so affixed by order of the Board of Directors of said corporation; that he signed his name thereto by like order; and that the facts stated in the said instrument are true.

.....
(Notary Public)

IMPORTANT

The agency that reviews our procedure is _____

PLEASE ATTACH THIS STATEMENT TO EACH APPLICATION.

The American Society of Mechanical Engineers
Boiler and Pressure Vessel Committee
United Engineering Center
345 East 47th Street, New York, N.Y. 10017

Gentlemen:

We have the latest Sections of the ASME Boiler and Pressure Vessel Code and Addenda as checked below that are required for the stamp or stamps applied for:

"A" Assembly (Power Boilers) **"L" Locomotive Boiler** **"M" Miniature Boiler** **"PP" Pressure Piping** **"S" Power Boiler**	***Section I,*** POWER BOILERS . . . . . ☐ ***Section II,*** MATERIAL SPECIFICATIONS . . . . . ☐ ***Section IX,*** WELDING QUALIFICATIONS. . . . . ☐ ***Case Interpretation and Addenda Subscription Service*** . . . . . ☐
"A" Assembly (Heating Boilers) **"H" Heating Boiler**	***Section II,*** MATERIAL SPECIFICATIONS . . . . . ☐ ***Section IV,*** HEATING BOILERS . . . . . ☐ ***Section IX,*** WELDING QUALIFICATIONS . . . . . ☐ ***Case Interpretation and Addenda Subscription Service*** . . . . . ☐
"N" Nuclear Vessel	***Section II,*** MATERIAL SPECIFICATIONS . . . . . ☐ ***Section III,*** NUCLEAR VESSELS . . . . . ☐ *Section VIII, Division 1,* PRESSURE VESSELS . ☐ ***Section IX,*** WELDING QUALIFICATIONS . . . . . ☐ ***Case Interpretation and Addenda Subscription Service*** . . ☐
"NV" Nuclear Vessel Safety Valve	***Section II,*** MATERIAL SPECIFICATIONS . . . . . ☐ ***Section III,*** NUCLEAR VESSELS . . . . . ☐ ***Case Interpretation and Addenda Subscription Service*** . . . . . ☐
"U" Pressure Vessel **"UM" Miniature Pressure Vessel**	***Section II,*** MATERIAL SPECIFICATIONS . . . . . ☐ *Section VIII, Division 1,* PRESSURE VESSELS . ☐ ***Section IX,*** WELDING QUALIFICATIONS . . . . . ☐ ***Case Interpretation and Addenda Subscription Service*** . . . . . ☐
"UV" Pressure Vessel Safety Valve	***Section II,*** MATERIAL SPECIFICATIONS . . . . . ☐ *Section VIII, Division 1,* PRESSURE VESSELS . ☐ ***Case Interpretation and Addenda Subscription Service*** . . . . . ☐
"V" Boiler Safety Valve	***Section I,*** POWER BOILERS . . . . . ☐ ***Section II,*** MATERIAL SPECIFICATIONS . . . . . ☐ ***Section IV,*** HEATING BOILERS . . . . . ☐ ***Case Interpretation and Addenda Subscription Service*** . . . . . ☐

Yours truly,

_____
DATE

_____
(NAME OF COMPANY)

By _____

THE AMERICAN SOCIETY OF MECHANICAL ENGINEERS

Certificate of Authorization

Number _____

THIS IS TO CERTIFY that

_____

is hereby authorized to use the _____
symbol of The American Society of Mechanical Engineers in accordance with the applicable rules of the Boiler and Pressure Vessel Code of The American Society of Mechanical Engineers. The use of the Code symbol and the authority granted by this certificate of authorization are subject to the provisions of the agreement set forth in the application. Any construction stamped with this symbol shall have been built strictly in accordance with the provisions of the Boiler and Pressure Vessel Code of The American Society of Mechanical Engineers.

THIS AUTHORIZATION *expires on December 31, 1970.*

Authorized on _____ ***for***

THE AMERICAN SOCIETY OF MECHANICAL ENGINEERS
by the **BOILER AND PRESSURE VESSEL COMMITTEE**

Chairman

Secretary

Index

Abrasion, allowance for, UG-25 10
Access openings, UG-46 31
Accessibility, pressure vessels, UA-351 286
Allowance for corrosion, erosion, or abrasion, UG-25, UR-13, UB-13, UCS-25, UCL-25..10, 82, 94, 116, 174
Applicability of Code, U-1 1
Applied linings, tightness, UCL-51 177
Approval of new materials, UG-5, UA-110 ..... 4, 263
Attachments
  fitting, UG-82 39
  of stiffening rings to shell, UG-30, UHT-30 .... 15, 187
  non-pressure parts, UW-16, UHT-85 ..... 68, 190
  pipe and nozzle necks to vessel walls, UG-43, UHF-18 ..... 30, 183
  structural, UHT-28 186

Backing strip, UW-16, UW-35 ..... 68, 75
Bend test, UHA-52 167
Bending stress, welded joints, UW-9 61
Blind flanges, UG-34 19
Bolt heads, seal welding, UR-40 87
Bolt holes, UR-35 86
Bolted flange connections, UG-44 31
  bolt loads, UA-49 202
  bolt stresses, UA-49, Appendix S 202
  bolt studs, UA-46 199
  design of, UA-45 to 56, Appendix S 199
  flange stresses, UA-51, Appendix S 209
  materials, UG-5 to UG-13, UCN-12, UA-46..4, 179, 199
  tightness of, Appendix S
  types of attachment, UA-48 202
Bolted joints, UR-19 83
Bolts, UG-12, UR-6, UCS-10, UNF-12, UCI-12, UA-46, Appendix S 7, 82, 101, 121, 170, 199
Braced surfaces, UG-47 32
Brazed connections for nozzles, UB-17 to 19 95
Brazed joints
  efficiency of, UB-14 94
  maximum service temperature, UB-12 94
  strength of, UB-10 93
Brazing
  cleaning of brazed surfaces, UB-34 96
  fabrication by, UB-1, UB-30 to 37 ..... 93, 96
  filler metal, UB-6, UB-15 ..... 93, 94
  fluxes, UB-7 93
  heads into shells, UB-16 95
  operating temperature, UB-2 93
Buttstraps
  curvature, UR-31, UR-52, UB-33 ..... 85, 87, 96
  forming ends of, UG-79 37
  thickness and corrosion allowance, UR-14, UB-13 ..... 82, 94
  welding ends of, UR-31, UB-33 ..... 85, 96

Calking, riveted joints, UR-21, UR-40 ..... 84, 87
Carbon in material for welding, UF-5, UCS-5 ..... 88, 100
Cast iron
  circular dished heads, UCI-35 70
  parts, small, UG-11 6
  pipe fittings, UCI-3 170
Cast iron vessels
  corners and fillets, UCI-37 171
  head design, UCI-32, UCI-33 170
  hydrostatic test, UCI-99 171
  nozzles and fittings, UCI-36 171
  pressure-temperature limitations, UCI-3 170
Cast nodular iron vessels
  design, UCN-16 179
  pressure temperature limitations, UCN-3 178
  service restrictions, UCN-2 178
Castings
  defects, UG-24 9
  impact test, UG-84, UHT-6 39
  inspection, UG-24 9
  quality factor, UG-24 9
  specifications, UG-8, UCS-8, UNF-8, UCN-5 .... 5, 101, 121, 178
Certificate of authorization for stamp, UG-116 50
Chip marks on integrally forged vessels, UF-32 90
Circumferential joints
  alignment tolerance, UHT-20 186
  assembling, UW-9, UB-16 ..... 61, 95
  back pitch of rivets in, UR-20 84
  brazing, UB-16 95
  tapering, riveted lap joints, UR-38 86
  vessels subjected to external pressure, UG-28 11
Clad material, inserted strips, UCL-33 175
Clad plate, UCL-11 173
Cleaning
  of brazed surfaces, UB-34 96
  of welded surfaces, UW-32 75
Clearance between surfaces to be brazed, UB-35 98
Code, scope of, U-1 1
Combination of
  different materials, UB-5 93
  methods of fabrication, U-2, UG-17 ..... 2, 8
Computed working pressure from hydrostatic tests, UG-101, UCI-101 ..... 46, 172
Conical heads, UG-32, UA-5, UHT-33 ..... 17, 194
Conical sections, UHT-19 186
Connections
  bolted flange (*see* Bolted flange connections)
  brazed, UB-19-21 83
  expanded, UG-43 30
  from vessels to safety valves, UG-134 58
  postweld heat treatment of, UW-10, UHT-56 ..... 62, 187
  riveted, UR-23 to 25 84
  studded, UG-43 30

threaded, UG-43 30
welded, UW-15, UW-16, UHT-17, UHT-18 .. 65, 68, 183, 187
Cooling, after postweld heat treating, UW-40, UHT-56, Table UHT-56 76
Corrosion
allowance, UG-25, UR-13, UB-13, UCS-25, UCL-25, UHT-25 ..... 10, 82, 94, 116, 162, 174, 186
Corrosion-resistant linings, UG-26 10
Corrugated Shells, UCS-28 116
Cover plates, UG-34 19
on manholes and handholes, UG-46 31
spherically dished, UG-35, UA-6 ..... 24, 196
Cracking, stress-corrosion, UHA-103 168
Crushing strength of plate, UR-12 82
Cutting plates, UG-76, UW-31, UHT-83 ..... 37, 74, 189
Cylindrical shells
thickness, UG-27, UHT-27 ..... 11, 186
transition in, UG-36 24
supplementary loading, UG-22, UA-274 ..... 8, 275

Data report
manufacturer's 301
partial 305
Defects in welded vessels, repair, UW-38, UHT-85 ..... 76, 190

Definitions, UA-60 211
Design
brazed vessels, UB-9 93
carbon and low-alloy steel vessels, UCS-16 116
cast iron vessels, UCI-16 170
cast nodular iron vessels, UCN-16 179
clad vessels, UCL-20 173
ferritic steel vessels with properties enhanced by heat treatment, UHT-16 183
forged vessels, UF-12 88
high-alloy steel vessels, UHA-20 153
loadings, UG-22 8
multi-chamber vessels, UG-19 8
nonferrous vessels, UNF-16 122
pressure, UG-21 8
riveted vessels, UR-10 82
welded vessels, UW-8, UHT-1, UHT-16 .... 61, 182, 183
Diameter exemption, U-1 1
Dimensions, checking of UG-96 43
Discharge of safety valves, UG-133, UG-134 ..... 57, 58
Dished heads (*see* Formed heads)
Disks, rupture, UG-127 54
Dissimilar weld metal, UG-18, UHA-107, UCL-31 ..... 8, 169, 174
Distortion
of welded vessels, UG-80 38
supports to prevent, UG-27, UG-28 11
Drainage
discharge from safety and relief valves, UG-134 .. 58
of vessels subject to corrosion, UG-25, UA-351 ..... 10, 286
Drop weight tests, UHT-6 .....

Eccentricity of shells, UG-80 38
Edges of plates
calking of, UR-21, UR-40 ..... 84, 87
metal removal from, UHT-83 189
tapered, UW-9 61
Efficiency
around openings for welded attachments, UW-15 65
joints, riveted, UR-15 83
joints, welded, UW-12 62
Elasticity, modulus of, UF-27 89
Electric resistance welding, UW-12 62
Ellipsoidal heads, UG-32, UG-33, UA-4, UHT-32, UHT-33 ..... 17, 18, 187, 192
Erosion, allowance for, UG-25 10
Etching
of sectioned specimens, UA-250 271
solutions for examination of materials, UA-250 271
Examination of sectioned specimens, UW-52 79
Examination of welded joints, UW-51, UW-52, UHT-57, UHT-83 ..... 77, 79, 188, 189
Exemptions, diameter and volume, U-1 1
Expanded, connections, UG-43 30
External pressure, tube and pipe, UG-31 15
External pressure vessels, UG-28 to 30, UG-33, UG-80, UCN-28, UHT-27, UHT-29, UHT-30, UHT-33 ..... 11, 18, 38, 184, 187
allowable working pressure for UG-28 11
design of heads for, UG-33, UCS-33, UNF-33, UHA-31, UCI-33, UHT-33, UA-276 ..... 18, 116, 123, 165, 170, 275
joints in shells of, UG-28, UHT-17 ..... 11, 183
reinforcement for openings, UG-37, UHT-17 .... 25, 183
supports for, UG-29, UA-185 ..... 13, 267
thickness of shell, UG-28, UCS-28, UNF-28, UHA-28, UCI-28, UHT-27, UCL-26 ..... 11, 116, 122, 165, 170, 174

Fabrication
brazed vessels, UB-30 96
carbon and low-alloy steel vessels, UCS-75 120
cast iron vessels, UCI-75 171
cast nodular iron vessels, UCN-75 180
clad vessels, UCL-30 174
ferritic steel vessels with tensile properties enhanced by heat treatment, UHT-75 .....
forged vessels, UF-26 89
high-alloy steel vessels, UHA-40 166
nonferrous vessels, UNF-75 123
riveted vessels, UR-30 85
welded vessels, UW-26, UHT-1, UHT-75 ..... 73, 182
Ferritic steel vessels with tensile properties enhanced by heat treatment
design, UHT-16 183
fabrication, UHT-75 188
head design – UHT-33 187
heat treatment – UHT-80 188
heat treatment verification tests, UHT-81 189
marking – UHT-86 190
materials, UHT-1, UHT-5, UHT-40 ..... 182, 187
stamping, UHT-15 190
welded joints, UHT-17 183
welding, UHT-82 189
Filler plugs for trepanned holes, UA-251 272
Fillet welds, UW-18, UW-36, UCL-46 ..... 72, 75, 177
Fitting attachments, UG-82, UHT-18 ..... 39, 183
Flange contact facings, UA-47 200
Flanges
bolted design, UA-45 to 55, Appendix S 199
of formed heads for welding, UW-13 64
type of attachment, UA-48 202
Flat heads, UG-34 19
reinforcement of openings, UG-39 27
Flat spots on formed heads, UG-32 17
Flued openings, UG-38 27
Forged parts, small, UG-11 6
Forged vessels
heat-treatment, UF-31 89
localized thin areas, UF-30 89
welding, UF-32 90
Forgings, UG-7, UF-6, UCS-7, UNF-7 .... 5, 88, 101, 121

identification of, UF-47 92
Form, manufacturer's data report 301
partial report 305
Formed heads, UG-32, UG-33, UHT-32, UHT-36 ... 17, 18, 187
flued openings in, UG-38 27
insertion of, welded vessels, UW-13 64
joint efficiency, UG-32 17
knuckle radius, UG-32, UHT-19 ..... 17, 186
length of skirt, UG-32, UG-33, UW-13, UHT-19 ..... 17, 18, 64, 186
on welded vessels, UW-13 64
reinforcement for openings, UG-37 25
Forming
ends of shell plates and buttstraps, UG-79 37
forged heads, UF-28 89
shell sections and heads, UG-79, UCS-79, UNF-77, UHT-79 ..... 37, 120, 123, 188
Furnaces for heat treating, UHT-80 188
temperature control of, UHT-80 188
Furnaces, temperatures for postweld heat treatment, UW-40 76

Galvanized vessels, UG-99 44
Gasket materials, UA-47 200
Girth joints (*see* Circumferential joints)

Handhole and manhole openings, UG-46 31
Head flange (skirt) length, UG-32, UG-33, UW-13 ..... 17, 18, 64
Head joints (*see also* Joints, and Heads and shells)
brazing, UB-16 95
welded, UW-13 64
Head openings, entirely in spherical portion, UG-37 25
Heads
concave and convex, UG-32, UG-33, UCI-32, UCI-33, UCN-32, UCN-33, UHT-32, UHT-33 ..... 17, 18, 170, 179, 187
flat (*see* Flat heads)
forged, UF-13–UF-28 88
formed (*see* Formed heads)
forming, UG-79, UCS-79, UNF-77, UHT-79 ..... 37, 120, 123, 188
thickness, after forming, UG-32, UG-33, UHT-79 .. 17, 18
Heads and shells
external pressure, out-of-roundness, UG-80, UG-81 ..... 38, 39
openings through or near welded joints, UW-14 64
roundness tolerance, UG-80, UG-81 ..... 38, 39
Heads, design
conical, UG-32, UA-5, UHT-33 ..... 17, 187, 194
ellipsoidal, UG-32, UG-33, UA-4, UHT-32, UHT-33 ..... 17, 18, 192
hemispherical, UG-32, UG-33, UA-4, UHT-32, UHT-33 ..... 17, 18, 137, 192
spherically dished, UG-32, UG-33, UCN-35, UA-6 ..... 17, 18, 179, 196
toriconical, UG-32, UF-13, UA-5 ..... 17, 88, 194
torispherical, UG-32, UG-33, UA-4 ..... 17, 18, 192
torispherical, knuckle radius, UG-32 17
Heat treatment
by fabricator, UG-85, UCS-85 ..... 42, 120
carbon and low alloy steel vessels, UCS-85 120
ferritic steel vessels with tensile properties enhanced by heat treatment, UHT-80 188
forged vessels, UF-31 89
furnaces, UHT-80 188
high-alloy vessels, UHA-105 168
of test specimens, UG-85, UCS-85 ..... 42, 120
verification tests of, UHT-81 189
Hemispherical heads, UG-32, UA-4 ..... 17, 192
Holes
for screw stays, UG-83, UR-32 ..... 39, 85
(*see also* Rivet Holes)
for trepanning plug sections, refilling, UA-251 272
telltale, UG-25, UCL-25 ..... 10, 174
unreinforced, in welded joints, UW-14 64
Hubs, on flanges, UA-46 199
Hydrostatic proof test, UG-101, UCI-101, UCN-101 ..... 46, 172, 181
destructive, UG-101, UCI-101 ..... 46, 172
prior pressure application, UG-101 46
Hydrostatic test
cast iron vessels, UCI-99 171
combined with pneumatic, UG-100 45
enameled vessels, UG-99 44
external-pressure vessels, UG-99 44
galvanized vessels, UG-99 44
standard, UG-99, UCL-52, UCN-99 ..... 44, 177, 181
welded vessels, UG-99, UW-50 ..... 44, 77

Identification markers, radiographs, UW-51 77
Identification of forgings, UF-47 92
Identifications of plates, UG-77, UG-85, UG-94, UHT-86 ..... 37, 42, 43, 190
Identification of welds, UW-37 75
Impact test
certification, UG-84 39
properties, UG-84, UHT-6 39
specimens, UG-84, UHT-5, UHT-6, UHT-81, UHT-82 ..... 39, 182, 189
temperature, UHT-5 182
Inspection
before assembling, UG-90 to 102 42
brazed vessels, UB-40, UB-44 98
carbon and low-alloy steel, UCS-90 120
cast iron vessels, UCI-90 171
cast nodular iron vessels, UCN-90 181
clad vessels, UCL-50 177
during fabrication, UG-95, UG-97 ..... 43, 44
ferritic steel vessels with tensile properties enhanced by heat treatment, UHT-90 190
fitting up, UG-96 43
forged vessels, UF-45 to 54 91
heat treatment, forgings, UF-52 92
high-alloy steel vessels, UHA-50 167
magnetic particle, UW-50, UHT-57, UHT-83 .... 77, 188, 189
material, UG-93, UG-94 43
nonferrous vessels, UNF-90 123
plate, UG-93 to 95 43
postweld heat treatment, UW-49, UF-52 ..... 79, 92
pressure vessels, accessibility, UA-351 286
rivet heads, UR-53 87
rivet holes, UR-54 87
riveted vessels, UR-50 87
rivets and bolts, UR-53 87
sectioning of welded joints, UW-41 77
spot-examination, UW-52 79
steel castings, UG-24, UA-80 ..... 9, 258
surfaces exposed and component parts, UG-95, UF-46 ..... 43, 92
test specimens, UF-53 92
vessels, UG-90, UG-97, UW-46, UR-51, UHT-90 ..... 42, 44, 77, 87, 190
vessels exempted from, U-1 1
welded vessels, UW-46 to 52 77
Inspection openings, UG-46 31
Inspectors
access to plant, UG-92 43

control of stamping, UG-116 50
facilities, UG-92 43
qualification, UG-91 43
reports, UG-120 52

Installation, pressure-relieving devices, UG-134, UHT-125, UA-353 to 357 ..... 58, 190, 286
Installation, pressure vessel, UA-350 286
Integral cast-iron dished heads, UCI-35 170
Internal structures, UA-140 to 142 265
Interpretations of Code, Foreword ..... (c)

Jacketed vessels, UG-28 11
Joints
bolted, UR-19 83
brazed, UB-16 95
calking of, UR-21, UR-40 ..... 84, 87
circumferential (*see* Circumferential joints)
efficiency
brazed, UB-14 94
riveted, UR-15 83
welded, UW-12 62
electric-resistance, butt-welding, UW-12 62
in vessels subjected to external pressure, UG-28 11
in cladding and applied linings, UCL-31 174
lap (*see* Lap joints)
longitudinal (*see* Longitudinal joints)
riveted (*see* Riveted joints)
tightness, UR-40 87

Knuckles
radius, UG-32, UHT-19 ..... 17, 186
transition section, UG-36, UHT-19 ..... 24, 186

Lap joints
amount of overlap, UW-9, UB-16 ..... 61, 95
brazed, UB-16 95
longitudinal under external pressure, UG-28 11
riveted, UR-18, UCS-18, UNF-18 .. 83, 99, 116, 118, 122
riveted, limits of shell, UR-18 83
welded, UW-9 61
Lethal gases or liquids, UW-2, UCI-2 ..... 59, 169
Ligaments, efficiency of, UA-290 285
Limit of out-of-roundness of shells, UG-80 38
Limitation on welded vessels, UW-2 59
Linings, UG-26, UCL-12 ..... 10, 173
corrosion-resistant, UA-170 to 172 ..... 266, 267
Liquid penetrant examination, UHT-57, UHT-83, Appendix VIII 188, 189, 261
Loadings, UG-22 8
Local postweld heat treatment, UW-40 76
Longitudinal joints
alignment tolerance, UHT-20 186
brazing, UB-16 95
lap-riveted, UR-18 83
location of rivet holes on, UR-22 84
riveted, UR-16, UR-18 83
vessels subjected to external pressure, UG-28 11
Low-temperature operation, UCS-65 119
Low-temperature vessels
brazed, UB-22 96
for gases and liquids, UCS-65 to 67, UNF-65, UCL-27 ..... 119, 123, 174
impact test requirements, UG-84, UHA-51 ..... 39, 167
impact tests, when not required, UCS-66 119
marking, UG-116 50
materials, UG-84 39
testing of materials, UG-84 39
Lugs for ladders, platforms, and other attachments, UG-55 37

Magnetic particle inspection, UHT-57, UHT-83, UA-70, UA-71, UA-72 ..... 255, 256
Manholes
and handholes, UG-46 31
cover plates for, UG-34 19
minimum vessel diameter requiring, UG-46 31
Manufacturer, responsibility of, UG-90, UW-26 ..... 42, 73
Manufacturer's data report 301
partial 305
Manufacturer's stamps, UG-77, UG-94 ..... 37, 43
Marking
castings, UG-24 9
materials, UG-94, UHT-86 ..... 43, 190
plates, UG-10, UG-77, UG-85, UG-94, UHA-41, UHT-86 ..... 5, 37, 42, 43, 166, 190
standard pressure parts, UG-11 6
valves and fittings, UG-11 6
with Code symbol, UG-116, UHT-115 ..... 50, 190
Markings, transfer after cutting plates, UG-77, UG-94 ..... 37, 43
Materials
approval of new, UG-5, UA-110 ..... 4, 263
approval of repairs, UG-78, UCI-78 ..... 37, 171
brazed vessels, UB-5 93
carbon and low-alloy steel vessels, UCS-5 100
castings, UG-8 5
cast iron vessels, UCI-5 170
cast nodular iron, UCN-5 178
clad vessels, UCL-10 173
combination of, UG-18, UHT-40 ..... 8, 187
ferretic steel vessels with tensile properties enhanced by heat treatment, UHT-5 182
for non-pressure parts, UG-6 5
forged vessels, UF-5 88
forgings, UG-7 5
heat treatment of, UG-85, UCS-85, UHT-80 ..... 42, 120, 188
high-alloy steel vessels, UHA-11 153
inspection of, UG-93, UG-95 43
nonferrous vessels, UNF-5 121
pipe and tubes, UG-9 5
plate, UG-6 5
riveted vessels, UR-5 82
rods and bars, UCS-12 101
specifications for UG-5, UG-23, UCS-23, UNF-23, UHA-23, UCI-23, UCN-5, UHT-5, UHT-23 .. 4, 9, 116, 122, 165, 170, 178, 182, 186
standard pressure, parts, UG-11 5
unidentified, UG-10 6
use of, over thickness listed in Section II, UG-6 .. 5
welded vessels, UW-5 61
Measurement of out-of-roundness of shells, UG-80 .. 38
Metal temperature, determination, UA-130 265
control of, Appendix T 293
Miscellaneous pressure parts, UG-11 5
Mill under-tolerance, UG-16 7
Minimum thickness of plate, UG-16, UR-10, UCS-16, UHT-16, UNF-16, UHA-20, UCL-20 ..... 7, 82, 116, 122, 153, 173, 183
Multi-chamber vessels, design, UG-19 8
Multiple safety valves, UG-134 58

Nameplates, UG-117, UG-118, UHT-115 ..... 52, 190
New materials, UG-5, UA-110 ..... 4, 263
Non-pressure parts, attachment of, UG-55, UHT-85 ..... 37, 190
Notch ductility test, UHT-5 182
Nozzle openings
reinforced, UG-36, UHT-18 ..... 24, 183
unreinforced, UG-36 24

vessels subjected to external pressure, UG-37 25

Nozzles (*see also* Connections)
attachment of, to shell, UG-43, UHT-18 ..... 30, 183
minimum thickness of neck, UG-45, UHT-18 ..... 31, 183
Nuts and washers, UG-13, UCS-11, UNF-13 .. 7, 101, 122

Offset of edges of plates at joints, UW-33, UHT-20 ..... 75, 186
Openings
adjacent to welds, UW-14 64
closure of, UA-251 272
for connections to brazed vessels, UB-19 95
for drainage, UG-25 10
head (*see* Openings, head and shell)
in flat heads, UG-39 27
inspection, UG-46 31
manhole (*see* Manholes)
nozzle (*see* Nozzle openings)
shell (*see* Openings, head and shell)
through welded joints, UW-14 64
Openings, head and shell
computation of, UA-280 277
not requiring additional reinforcement, UG-36 24
reinforced, size, UG-36, UHT-18 ..... 24, 183
reinforcement for adjacent openings, UG-42 29
reinforcement of, UG-37, UHT-18 ..... 25, 183
requiring additional reinforcement, UG-36 24
shapes permissible, UG-36 24
unreinforced, size, UG-36 24
Outlets, discharge, pressure-relieving devices, UG-134 58
Out-of-roundness, UG-80, UG-81, UF-27 ..... 38, 39, 89
Overpressure limit for vessels, UG-125 53

Partial data report, manufacturer's, UG-120 52
Parts, miscellaneous, UG-11 6
Peening, UW-39 76
Penetrameters, UW-51 77
Pipes and tubes, UG-9, UG-31, UCS-9, UNF-9 ..... 5, 15, 101, 121
Pipe connections, openings for UG-43 30
Pipe fittings, vessels built of, UCS-9 101
Pipe used for shells, UCS-27 116
Piping external to vessel, U-1 1
Plate
curvature, UR-52, UB-33 ..... 87, 96
measurement, dimensional check, UG-96 43
Plate edges
calking, UR-40 87
cutting, UG-76, UG-93, UW-31, UHT-83 ..... 37, 43, 74, 189
exposed left unwelded, UG-76 37
inspection of, UG-95 43
Plates
alignment, UW-31, UHT-20 ..... 74, 186
cover, UG-34 19
crushing strength, UR-12 82
cutting, UG-76, UG-93, UW-31, UHT-83 ..... 37, 43, 74, 189
forming, UG-79, UCS-79, UNF-77, UHT-79 ..... 37, 120, 123, 188
heat treatment, UG-85 42
identification, UG-77, UG-94, UHT-86 ..... 37, 43, 190
impact test, UG-84, UHF-5, UHT-6, UHT-81 .. 39, 182, 189
inspection, UG-93, UG-94, UG-95 43
laying out, UG-77 37
less than ¼ in. thickness, UG-77 37
markings, transfer after cutting, UG-77, UG-94 .. 37, 43
minimum thickness, UG-16, UR-10, UCS-16, UNF-16, UHA-20, UCL-20, UHT-5, UHT-79 ..... 7, 82, 116, 122, 153, 173, 182, 188
planing edges, UR-21 84
repair of defects, UG-78, UCI-78 ..... 37, 171
specifications, UG-6, UCS-6, UNF-6, UHT-5 .... 5, 100, 121, 182
Plug welds, UW-17 72
Pneumatic test
pressure, UG-100 45
yielding, UG-100 45
Porosity, welded joints, UW-51, Appendix IV 77, 215
Porosity charts, UA-65 215
Post heat treatment, UHT-79, UHT-82 189
Postweld heat treatment
connections for nozzles and attachments, UR-23, UHT-56 187
cooling after, UW-40, UHT-56 ..... 76, 187
furnace temperature, UW-40 76
inspection, UW-49 77
local, UW-40 76
requirements, UCS-56, UHT-56 ..... 117, 187
riveted vessels, UR-36 86
temperature range, UHT-56 187
welded vessels, UW-10, UW-40, UHA-32, UCL-34, UHT-56 ..... 62, 76, 165, 175
Preheating, Appendix R 289
Preparation of plates for welding, UW-31, UW-32 74
Pressure (*see also* Working pressure, allowable)
design, UG-21 8
limits, U-1 1
Pressure parts, miscellaneous, UG-11 6
Pressure-relieving devices (*see also* Safety and relief valves)
discharge, UG-134 58
installation and operation, UG-134, UA-353 to 357 ..... 58, 286, 287
rupture disks, UG-127 54
setting, UG-133 57
Pressure vessels, exempted from inspection U-1 1
Proof test, hydrostatic (*see* Hydrostatic proof test)

Qualification
of brazers, UB-43 98
of welders, UW-29, UCL-45 ..... 74, 177
of welding procedure, UW-28, UCL-40 to 44 .... 73, 175
Quenching and tempering, UHT-80 to UHT-82 189
Quick-actuating closures, UG-35 23

Radiograph factor, UW-12 62
Radiographing
examination by, UW-11, UHT-57 ..... 62, 188
joint efficiency, UW-12 62
requirements, UCS-57, UHA-33, UCL-35, UHT-57 ..... 119, 166, 175, 188
spot examination, UW-52 79
spot examination, retests, UW-11, UW-52 ..... 62, 79
technique, UW-51 77
thickness, mandatory minimum, UW-11, UCS-57 .... 62, 119
Radiographs
acceptance by inspector, UW-51, UW-52 ..... 77, 79
gamma rays, radium capsule, UW-51 77
interpretation by standard procedure, UW-51, UW-52 ..... 77, 79
Reaming holes for screw stays, UG-83, UR-32 ..... 39, 85
Reducer sections, rules for, UA-5 194
Reinforcement
defined limits, UG-40 28
head and shell openings, UG-37, UG-39 ..... 25, 27

large openings, UG-36, UA-7 ..... 24, 198
multiple openings, UG-42 29
nozzle openings, UG-37 to 42, UHT-18 ..... 25, 183
of openings in shells, computation of, UA-280 277
openings subject to rapid pressure-fluctuation, UG-36 24
strength, UG-41 29
Relief devices (*see also* Pressure-relieving devices, and safety and relief valves), UG-125 to 134 53
Relief valves (*see* Safety and relief valves)
Relieving capacity of safety valves, UG-132 57
Repairs
approval of defects in material, UG-78, UF-32, UF-46, UCN-78 ..... 37, 90, 92, 180
defects in forgings, UF-37 91
defects in welds, UW-38, UF-38, UHT-57 ..76, 91, 188
defective brazing, UB-37 98
Responsibility of manufacturer, UG-90, UW-26 ..... 42, 73
Retests
forgings, UF-54 92
impact specimens, UG-84, UHT-6 ..... 39, 182
joints, welded, UW-52 79
Revisions to Code, Foreword ..... (*c*)
Rivet heads
eccentricity limits, UR-39 86
forms, UR-39 86
inspection, UR-53 87
seal welding, UR-40 87
Rivet holes
burrs removal, or chamfering, UR-34 85
countersunk (and swell neck) UR-32 85
drilled, UR-32 85
edge distance, UR-22 84
inspection of, UR-51, UR-54 87
sub-drilling or sub-punching, and reaming, UR-32 85
tolerance for, UR-33 85
Riveted connections for nozzles, UR-23 to 25 84
Riveted joints
assembling, UR-37 86
back pitch, UR-20 84
butt-straps, UR-14, UR-31, UB-33 ..... 82, 85
calking, UR-21, UR-40 ..... 84, 87
circumferential, UR-17 83
edge distance, UR-22 84
efficiency, UR-15 83
longitudinal, UR-16, UR-18 83
replacement of rivets, UR-55 87
seal welding, UR-40 87
spacing of rivet holes, UR-22 84
strength around openings, UR-25 84
Rivets
allowable shearing strength, UR-11 82
cold driven, UR-33 85
design stress values, UR-11 82
driving, UR-39 86
hot driven, UR-33 85
inspection, UR-53 87
length and heads, UR-39 86
material, UR-6, UCN-12 ..... 82, 179
pitch of, in riveted joints, UR-20 84
replacement, UR-55 87
strength, around openings, UR-25 84
swell neck, UR-13 82
testing for tightness, UR-55 87
Rods, bars, and shapes, UG-14, UCS-12, UNF-14 ..... 7, 101, 122
Rolled parts, small, UG-11, UHT-6 ..... 6, 182
Rupture disks, UG-125, UG-127, UG-129, UG-133, UG-134 ..... 53, 54, 55, 57, 58
Safety and relief valves
capacity, certification, UG-131 56
capacity, conversion, UA-230 269
connection to vessels, UG-134 58
construction, UG-126 53
discharge capacity of multiple, UG-134 58
discharge pipe, UG-134 58
drain, UG-126 53
installation on vessels in service, UG-134 58
liquid relief, UG-129 55
marking, UG-129 55
pressure setting, UG-133 57
spring-loaded, UG-126 53
springs, adjustment, UG-133 57
stamping, UG-131 56
stop valves adjacent to, UG-134 58
test, UG-131 56
Safety devices, UG-125 to 134 53
for unfired steam boiler, UG-125 53
Scope of Section VIII of the Code, U-1 1
Seal welding of bolt heads, UR-40 87
Seal welding of calking edges, UR-40 87
Sectioning
closing holes left by, UA-251 272
etching plugs taken, UA-250 271
examination by, UW-41 77
Service restrictions, UW-2 59
Shapes, special, UG-19 8
Shearing strength of rivets, UR-11 82
Shells
allowable working pressure, UG-27 11
computation of openings in, UA-280 277
forming, UG-79, UCS-79, UNF-77, UHT-79 ..... 37, 120, 123, 188
made from pipe, UCS-27 116
stiffening rings, UG-29, UG-30, UCS-29, UHT-29 to UHT-30 ..... 13, 15, 116, 187
thickness, UG-27, UG-28, UCN-28, UHT-27, UHT-79 ..... 11, 179, 186, 188
transition section, UG-36, UHT-19 ..... 24, 186
Shell plates, forming ends of, UG-79 37
Sigma-phase formation, UHA-104 168
Skirts
length on heads, UG-32, UG-33, UW-13, UHT-19 ..... 17, 18, 64, 186
support of vessels, UA-189 268
Slag inclusions in welds, UW-51, UW-52 ..... 77, 79
Special constructions, UG-19 8
Specifications for materials, UG-5, UG-23, UCS-23, UNF-23, UHA-23, UCI-23, UCN-5, UHT-5, UHT-23 ..... 4, 9, 116, 122, 165, 170, 178, 182, 186
Spherical sections of vessels, UG-32, UG-33 ..... 17, 18
Spherical shells, thickness, UG-27, UHT-27 ..... 11, 186
Spot examination of welded joints, UW-52 79
Springs for safety valves, UG-126, UG-133 ..... 53, 57
Stamping
location of, UG-116 50
multi-pressure vessels, UG-19, UG-116 ..... 8, 50
omission of, UHT-86 190
safety valves, UG-131 56
with Code symbol, UG-116, UHT-115 ..... 50, 190
Stamps
certificate of authorization, UG-116 50
low stress, UHT-86 190
not to be covered, UA-352 286
to be visible on plates, UG-77, UHT-86 ..... 37, 190
Static head, in setting safety valves
effect of, on limiting stresses, UG-98 44
Stayed surfaces, UG-47 32
Staying formed heads, UG-32 17
Stays and staybolts
adjacent to edges of staybolted surface, UG-49 33
allowable stress, UG-50 33

area supported, UG-47, UG-50 ..... 32, 33
dimensions, UG-50 33
ends, UG-48, UW-19 ..... 33, 73
holes, UR-32 85
location, UG-49 33
pitch, UG-47 32
screw, holes for, UG-83 39
upset for threading, UG-48 33
welded, UW-19 73
Steam-generating vessels, unfired, U-1 1
Steel, carbon content, UCS-5 100
Stenciling plates for identification, UG-77 37
Stiffening rings
attachment to shell, UG-30, UF-5, UHT-30 ..... 15, 88, 187
for vessels under external pressure, UG-29, UG-30, UCS-29, UHT-28, UHT-29 ..... 13, 15, 116, 186, 187
Stiffness, support of large vessels for, UG-27, UG-28 11
Stop valves, adjacent to safety and relief valves, UG-134, UA-354, UA-355 ..... 58, 286
Strength of
brazed joints, UB-10 93
circumferential joints, UR-17 83
rivets, allowable shearing, UR-11 82
Stress-corrosion cracking, UHA-103 168
Stress values
attachment welds, UW-15 68
basis for establishing, UA-500, UA-600 ..... 288, 289
carbon and low-alloy steel, Table UCS-23 116
cast iron, Table UCI-23 170
cast nodular iron, Table UCN-23 179
ferritic steels with tensile properties enhanced by heat treatment, Table UHT-23 186
high-alloy steel, Table UHA-23 165
nonferrous metals, Table UNF-23 122
Stud bolt threads, UG-12 7
Studded connections, UG-43 30
Supplementary design formulas, UA-1 to 7 190
Supports
design, UG-54, UA-185 ..... 34, 267
pressure vessels, UG-54, UG-82, UR-26 ..... 35, 39, 85
temperature, free movement under, UA-186 267
types of steel permissible for, UG-6 5
vessels subjected to external pressure, UG-29, UHT-29, UA-185 ..... 13, 187, 267

Tables
effective gasket width *b*, Table UA-49.2 205
gasket materials and contact facings, Table UA-49.1 204
maximum allowable efficiencies for arc and gas welded joints, Table UW-12 63
minimum number of pipe threads for connections, Table UG-43 30
minimum thickness of butt-straps, Table UR-14 83
minimum thickness of independent riveted reinforcing rings or flanges, Table UR-25 85
molecular weights of gases and vapors, Table UA-230 269
postweld heat treatment requirements, Table UCS-56, Table UHT-56 ..... 117, 187
recommended temperature ranges for heat-treatment Table UHA-105 169
Tables of stress values
carbon and low-alloy steel, Table UCS-23 102
cast iron, Table UCI-23 170
ferritic steels with tensile properties enhanced by heat treatment, Table UHT-23 186
high-alloy steel, Table UHA-23 154
nonferrous metals, Table UNF-23 125
cast nodular iron, Table UCN-23 179
welded carbon low-alloy pipe and tubes, Table UCS-27 116
Tables of values of
factor *K*, Table UA-4.1 194
factor *M*, Table UA-4.2 194
factor Δ, Table UA-5.1, UA-5.2 195
spherical radius factor K_1, Table UG-37 27
Telltale holes, UG-25, UCL-25 ..... 10, 174
in opening reinforcement, UW-15 68
Temperature
definitions, UA-60 81
design, UG-20 8
determination, UA-130 265
free movement of vessel on supports, UA-186 267
heat treatment, Table UCS-56, Table UHT-56 ..117, 187
limitations of brazed vessels, UB-2 92
limitations of cast nodular iron, UCN-3 178
limitations of postweld heat treating, UW-40 UCS-56, UHA-32, UHT-56 ..... 76, 117, 165, 187
metal, control of, Appendix T 293
operating or working, definitions, UA-60 211
zones of different, UG-20 8
Test coupons, UHT-81 189
Test gages, requirements, UG-102 49
Test plates
heat-treatment, UG-84 39
impact tests, UG-84, UHA-51 ..... 39, 167
production, UNF-95 147
Tests
hydrostatic proof, UG-101, UCI-101, UCN-101 ..... 46, 172, 181
pneumatic (*see* Pneumatic test)
vessels whose strength cannot be calculated, U-2, UG-101, UCI-101 ..... 246, 172
Thermal buffers, UHT-81 189
Thermocouples, attachment, UA-130 265
Thick shells
cylindrical, UA-2 191
spherical, UA-3 192
Thickness gages, details, UW-51 77
Thin plates, marking, UG-77, UHT-86 ..... 37, 190
Threaded connections, UG-43 30
Threaded inspection openings, UG-46 31
Threads, stud bolts, UG-12 7
Tolerances
forged shells and heads, UF-27, UF-29 89
heads and shells, UG-80, UG-81 ..... 38, 39
rivet holes, UR-33 85
Toriconical heads, UG-32, UG-33 ..... 17, 18
Torispherical heads, UG-32, UG-33, UA-4 ..... 17, 18, 192
Transferring markings on plates, UG-77 37
Transition in cylindrical shells, UG-36 24
Trays and baffles, acting as partial shell stiffeners, UG-29 13
Tubes and pipe, UG-9, UG-31, UCS-9, UNF-9 ..... 5, 15, 101, 121

Ultrasonic examination of welds, Appendix U 293
Unfired steam boiler, U-1 1
Unidentified materials, UG-10 5

Valves and fittings, marking, UG-11 6
Valves, safety and relief (*see* Safety and relief valves)
Verification tests, heat treatment, UHT-81 189
Volume exemption, U-1 1

Weld deposits
cleaning, UW-32 75
peening, UW-39 76

Weld-metal composition, UHA-42, UCL-32, UHT-82.. 167, 175, 189
Welded joints
category, UW-3, UHT-17 ..... 60, 183
description of types, UA-60 211
efficiency, UW-12 62
impact test, across, UCS-66, UHT-81 ..... 119, 189
porosity, UW-51 77
postweld heat treating, UW-10, UW-40, UCS-56, UHT-56, UNF-56, UHA-32, UCL-34 ..... 62, 76, 117, 123, 166, 175, 187
radiographic examination, complete, UW-51, UHT-57 ..... 77, 188
radiographing requirements, UW-11, UCS-57, UHT-57, UHA-33, UCL-35.... 62, 119, 166, 175, 188
sectioning, etch tests, UA-250 271
spot examination, UW-52 79
staggered, longitudinal, UW-9 61
taper, plates of unequal thicknesses, UW-9 61
types, around openings, UW-15, UW-16, UHT-18 .. 68, 183
ultrasonic examination of, Appendix U 293
Welded reinforcement of nozzle openings, UW-15, UW-16 68
Welded stayed construction, UW-19 72
Welded vessels
holes in joints of, UW-14 64
inspection, UW-46 to 52 77
limitations on, UW-2 59
tests of, UG-99, UW-50 ..... 49, 77
Welders and welding operators
identifying stamps, UW-29 74
records of, by manufacturers, UW-29 74
test of, qualification, UW-29, UHT-82 ..... 74, 189
Welding
attachment around openings, UW-15, UW-16 68
cleaning of welded surfaces, UW-32 75
details, limitations, Fig. UW-13 64
forged vessels, UF-32 90
materials having different coefficients of expansion, UHT-40 187
plate edges, matching, UW-31 74
plate, fitting up joint, UW-31 74
preparation of plates, UW-31, UW-32 ..... 74, 75
procedure qualification, UW-28, UCL-40 to 44, UHT-82 ..... 73, 175, 189
processes, UW-27, UA-60 ..... 73, 211
test requirements, UW-46 to 52, UHT-82 ..... 77, 189
Welds
acceptability, when radiographed, UW-51, UW-52 .. 77, 79
acceptability, when sectioned, UW-51 77
fillet, UW-18, UW-36, UCL-46 ..... 72, 75, 177
finish, UHT-84 190
identification of, UW-37 75
plug, UW-17 72
reinforcement, butt welds, UW-35, UHT-84 ..... 75, 190
repairs of defects in, UW-38, UF-38, UF-46, UHT-85 ..... 76, 91, 92, 190
sharp angles, avoid, at weld edges, UW-35 75
structural, UHT-85 196
tack, UW-31 74
temporary, UHT-85 190
types, description, UA-60 211
ultrasonic examination of, Appendix U 293
Working pressure, allowable
braced and stayed surfaces, UG-47 91
by proof test, U-2, UG-101, UCI-101 ..... 2, 46, 172
definition on, UG-98, UA-60 ..... 44, 211
on shells with lap-riveted joints, UR-18 83

1968 ASME
BOILER AND PRESSURE VESSEL CODE

The laws and regulations of most states and many cities in the U.S., and all provinces of Canada require that all constructions covered by the scope of the rules of this Code must be built strictly in accordance to the applicable Sections. No company which designs, builds or operates boilers or pressure vessels, no library or engineering office can afford to be without it.

NOTE: Prices for individual Sections will be increased by issuance of subsequent Addenda.

I. POWER BOILERS

Rules for construction of power boilers, electric boilers, miniature boilers and high temperature water boilers to be used in stationary service. Includes those power boilers used in locomotive, portable and traction service. The subparagraphs in the 1968 edition have been changed to a decimal system for simplification and clarity.

$10.00 ($8.00 member price)

II. MATERIAL SPECIFICATIONS –

Part A – Ferrous
Part B – Nonferrous

Specifications for ferrous (Part A) and nonferrous (Part B) materials that have been adopted for boiler and pressure vessels built under Code rules. More extensive, revised rules reflecting increased scope of materials coverage to provide for industry requirements.

Part A – $11.00 ($8.80 member price)
Part B – $11.00 ($8.80 member price)

III. NUCLEAR VESSELS

Minimum requirements for materials, design, fabrication, inspection, testing and certification of vessels for use in nuclear construction power plants. Appendices include: stress analysis methods, basis for establishing design stress intensity values, non-mandatory preheat requirements, porosity charts, capacity conversions for safety valves and manufacturers' data report forms.

$12.00 ($9.60 member price)

IV. HEATING BOILERS

Rules cover minimum construction requirements for design, fabrication, installation and inspection of steam heating, hot water heating and hot water supply boilers which are directly fired with oil, gas, electricity or coal and for operation at or below pressure and temperature limits set forth in this document.

$9.00 ($7.20 member price)

CASE INTERPRETATIONS BOOKLET

The Boiler and Pressure Vessel Committee meets regularly to consider requests for interpretations of the Code and to consider rulings for conditions encountered requiring special provisions. Those which have been adopted are published in this booklet.

$10.50 ($8.40 member price)

VII. RECOMMENDED RULES FOR CARE OF POWER BOILERS

Purpose is to promote safety in the use of power boilers. Includes rules for: routine operation, operating and maintaining boiler appliances, inspection, prevention of direct causes of boiler failure, operating and maintaining power boiler auxiliaries, control of chemical conditions and partial rules for installation.

$6.00 ($4.80 member price)

VIII. PRESSURE VESSELS –

Division 1

Minimum construction requirements for design, fabrication, inspection and certification of pressure vessels. In three sections: A, general requirements applicable to all pressure vessels; B, specific requirements applicable to the various methods used in fabrication of pressure vessels (welded, riveted, forged and brazed method); and C, specific requirements applicable to the class of materials used. Mandatory appendices include: supplementary design formulas, rules for bolted flanged connections, porosity charts, methods for magnetic particle inspection, inspection and testing of steel castings and methods for liquid penetrant examination. Seventeen additional nonmandatory appendices included.

$13.00 ($10.40 member price)

IX. WELDING QUALIFICATIONS

Rules applying to qualifications of welding and brazing procedures, welder and brazer, and welding and brazing operators for all types of manual, machine arc and gas welding processes permitted in other sections of the Code. Three parts include: requirements for ferrous materials, for nonferrous materials and for brazing ferrous and nonferrous materials. Three appendices and numerous tables and figures also included.

$5.50 ($4.40 member price)

CASE INTERPRETATIONS AND ADDENDA SUBSCRIPTION SERVICE

Case interpretations supplements published six times a year and the semi-annual colored sheet addenda to the Sections of the Code may be obtained on a subscription basis for the next three years (through June 1971, date of the new edition).

$32.00 ($25.60 member price)

SPECIAL OFFER

All Seven Sections, Case Interpretations Booklet, Case Interpretations and Addenda Subscription through June 1971

PLUS

Boiler Code Binder (regular price – $5.00) and Case Interpretations Binder (regular price – $4.00)
Total price of items – $129.00

Combined Package Price – $115.00 ($92.00 member price)

ORDER FORM

ASME ORDER DEPARTMENT, United Engineering Center
345 East 47th Street, New York, N.Y. 10017

Please send me:

	Copies	PRICES* Non-Member	ASME Member	Total
POWER BOILERS (Section I) (F1)	____	$10.00	$ 8.00	____
MATERIAL SPECIFICATIONS (Section II)				
Part A – Ferrous (E32)	____	11.00	8.80	____
Part B – Nonferrous (E33)	____	11.00	8.80	____
NUCLEAR VESSELS (Section III) (E37)	____	12.00	9.60	____
HEATING BOILERS (Section IV) (E31)	____	9.00	7.20	____
RECOMMENDED RULES FOR CARE OF POWER BOILERS (Section VII) (F2)	____	6.00	4.80	____
PRESSURE VESSELS (Section VIII) – Division 1 (F3)	____	13.00	10.40	____
WELDING QUALIFICATIONS (Section IX) (F4)	____	5.50	4.40	____
CASE INTERPRETATIONS BOOKLET (E36)	____	10.50	8.40	____
SUBSCRIPTION TO CASE INTERPRETATIONS AND ADDENDA for 3 years (through new edition, June 1971)	____	32.00	25.60	____
BINDERS				
For all 7 Sections of Code (E26)	____	5.00	4.00	____
For Case Interpretations Booklet (E27)	____	4.00	3.20	____
SPECIAL OFFER Including all of the above. Total value – $129.00 Combined Package Price	____	115.00	92.00	____

TOTAL $____

*Prices for individual Sections will be increased by issuance of subsequent Addenda.

RUSH ORDERS

Normal shipment is made by U.S. Surface Mail. Allow approximately 14 days for delivery within the U.S. If you need speedier delivery, indicate on the order form the manner in which you prefer shipment to be made (air parcel post, air freight, etc.). You will be billed for additional postage. Although ASME will use its best efforts and judgment to follow instructions as closely as possible, we can not assume liability or responsibility for special shipping arrangements or a specific delivery time.

POSTAGE

If payment accompanies order, ASME will assume shipping and handling charges, except for foreign orders and the additional postage required in the case of rush orders.

ASME MEMBERS

Only individuals may be members of ASME. Certificate of authorization to use Boiler Code stamp does not convey membership.

Name _____

Billing Address _____

_____

Shipping Address _____

_____

☐ Remittance Enclosed ☐ ASME Member
☐ Bill Me ☐ Nonmember

Special Shipping Instructions _____

_____

_____

Importador nº 221
Librería VAHER, S. L.
Costanilla de los Angeles, 15 - MADRID